Sensors

Temperature, Humidity

General information

Stock service

To be able to supply you with the required goods as soon as possible we have got an extensive warehouse with finished and preassembled devices. These stock versions have got a P/N or are marked with ●.
These versions can also be ordered directly via our online shop.

Delivery time for stock versions

The stock versions will be dispatched within three working days after receipt of order. But these stock versions are subject to prior sale.
In such cases we will send you an order confirmation with statement of delivery schedule.

Partial delivery

If your order includes devices of both delivery groups, unless otherwise indicated, you will receive the devices in one consignment.

Dispatch

The consignment is dispatched via parcel service or forwarder.
Another delivery mode shall be subject to prior agreement.

Pricing

The prices in this catalogue are valid from 01.01.2020.
Our prices are calculated ex works, excluding packaging, including statutory value-added tax.
In the event of price changes the prices stated in our price catalogue valid on the delivery day are binding.
Furthermore please refer to our "General Terms and Conditions of of Delivery and Services".

Minimum order value

For stock versions:	150.00 EUR
For manufactured versions:	300.00 EUR
For special versions:	on request

Handling fee

For orders of spare parts and accessories < 100.00 EUR:	25.00 EUR

Liability

The product details mentioned in our documents are based on our development and construction work and on our application-specific experiences.
The technical data and specifications are descended from the best of our knowledge.
But we reserve the right to realize technical changes based on any enhancements.
Furthermore we assume no liability beside the individual contract concluded.

General Terms and Conditions of Delivery and Service

Our current version of the Terms and Conditions of Delivery and Services can be downloaded by clicking the following link on our website:
http://agb.jumo-en.info

Your contact person for technical consulting and offer preparation/technical sales

Name	E mail	Phone	Fax	Function/responsible for:
		+49 661 6003-		
Andreas Katzer	andreas.katzer@jumo.net	2590	601	North, East (office Hanover)
Christoph Schneider	christoph.schneider@jumo.net	465	601	East (office Hanover)
Markus Mötzung	markus.moetzung@jumo.net	9417	601	Middle (office Darmstadt)
Kilian Birkenbach	kilian.birkenbach@jumo.net	2499	601	Mitte (office Darmstadt)
Jörg Kunte	joerg.kunte@jumo.net	414	688	South-East (office Ingolstadt)
Manuel Trost	manuel.trost@jumo.net	9416	605	West (office Essen)
Eduard Fast	eduard.fast@jumo.net	2209	605	South-West (office Stuttgart)
Peter Deiß	peter.deiss@jumo.net	585	688	Platinum temperature sensors
Michael Braun	michael.braun@jumo.net	9737	688	Wireless sensors
Tino Schuster	tino.schuster@jumo.net	9154	601	Heat meter sensors
Horst Damm	horst.damm@jumo.net	631	601	Humidity sensors

Your contact person for order processing/operative sales

Name	E mail	Phone	Fax	Function/responsible for:
		+49 661 6003-		
Daniela Dittrich	daniela.dittrich@jumo.net	441	688	North, East (office Hanover)
Julia Burkard	julia.burkard@jumo.net	445	688	South-East (office Ingolstadt)
Ines Schiller	ines.schiller@jumo.net	2896	601	Middle (office Darmstadt)
Steffi Denner	steffi.denner@jumo.net	2520	688	West (office Essen)
Sandra Skrziszowsky	sandra.skrziszowsky@jumo.net	2520	688	West (office Essen)
Maximilian Koch	maximilian.koch@jumo.net	9283	606	South-West (office Stuttgart)

Your contact person for service: customer support, repair, technical support for applications, support for optimizing and operation

Name	E mail	Phone	Fax	Function/responsible for:
		+49 661 6003-		
Ernst Schmidt	ernst.schmidt@jumo.net	447	881 447	Head of service
Group Commercial Processing	service@jumo.net	729	503	Commercial Processing
Technical Support	service@jumo.net	9135	881 899	

Your contact person for engineering

Name	E mail	Phone	Fax	Function/responsible for:
		+49 661 6003-		
Martin Müller	martin.mueller@jumo.net	2390	88 2390	Technical Processing
Anna-Lena Leitschuh	anna-lena.leitschuh@jumo.net	2208	88 2208	Assistant/Commercial Processing

JUMO GmbH & Co. KG
Delivery address: Mackenrodtstraße 14
36039 Fulda, Germany
Postal address: 36035 Fulda, Germany
Phone: +49 661 6003-0
Fax: +49 661 6003-607
Email: mail@jumo.net
Internet: www.jumo.net

JUMO Instrument Co. Ltd.
JUMO House
Temple Bank, Riverway
Harlow, Essex, CM20 2DY, UK
Phone: +44 1279 63 55 33
Fax: +44 1279 62 50 29
Email: sales@jumo.co.uk
Internet: www.jumo.co.uk

JUMO Process Control, Inc.
6733 Myers Road
East Syracuse, NY 13057, USA
Phone: +1 315 437 5866
Fax: +1 315 437 5860
Email: info.us@jumo.net
Internet: www.jumousa.com

Temperature, Humidity

Thermocouples	No.
Connection diagrams for RTD temperature probes and thermocouples	900002
Construction and application of thermocouples Thermocouple voltages to EN 60584 and DIN 43710	901000
Thermocouples for equipment and systems tested to DIN EN 14597 (DIN 3440)	
Screw-in thermocouples	901006
Push-in thermocouples	901006
Screw-in thermocouples	
With terminal head form B	901020
With terminal head form J	901030
With compensating cable	901050
Melt thermocouples	901090
Push-in thermocouples	
With terminal head form A	901110
With terminal head form B	901120
With compensating cable	901150
With bayonet lock	901190
Temperature probes for glass furnaces	901830
Mineral-insulated thermocouples	
Various types	901210
Thermocouple insertion probes	
Various types JUMO FOODtemp	901350

JUMO GmbH & Co. KG
Delivery address: Mackenrodtstraße 14
36039 Fulda, Germany
Postal address: 36035 Fulda, Germany
Phone: +49 661 6003-0
Fax: +49 661 6003-607
Email: mail@jumo.net
Internet: www.jumo.net

JUMO Instrument Co. Ltd.
JUMO House
Temple Bank, Riverway
Harlow, Essex, CM20 2DY, UK
Phone: +44 1279 63 55 33
Fax: +44 1279 62 50 29
Email: sales@jumo.co.uk
Internet: www.jumo.co.uk

JUMO Process Control, Inc.
6733 Myers Road
East Syracuse, NY 13057, USA
Phone: +1 315 437 5866
Fax: +1 315 437 5860
Email: info.us@jumo.net
Internet: www.jumousa.com

RTD temperature probes	**No.**
Construction and application of RTD temperature probes	902000

RTD temperature probes for plant and equiptment approved to DIN EN 14597 (DIN 3440)	
Screw-in RTD temperature probes	902006
Push-in RTD temperature probes	902006

Screw-in RTD temperature probes	
With terminal head form B	902020
With terminal head form B for standard applications	902023
With terminal head form J	902030
With plug connection JUMO VIBROtemp	902040
With plug connector to DIN EN 175301	902044
With connecting cable	902050
Melt RTD temperature probes	902090

Push-in RTD temperature probes	
With terminal head form B	902120
With terminal head form B for standard applications	902123
With terminal head form J	902130
With connecting cable	902150
With connecting cable for the solar heating system	902153
With bayonet lock	902190

Mineral-insulated RTD temperature probes	
Various types	902210

RTD insertion temperature probes	
Various types JUMO FOODtemp	902350

JUMO GmbH & Co. KG
Delivery address: Mackenrodtstraße 14
36039 Fulda, Germany
Postal address: 36035 Fulda, Germany
Phone: +49 661 6003-0
Fax: +49 661 6003-607
Email: mail@jumo.net
Internet: www.jumo.net

JUMO Instrument Co. Ltd.
JUMO House
Temple Bank, Riverway
Harlow, Essex, CM20 2DY, UK
Phone: +44 1279 63 55 33
Fax: +44 1279 62 50 29
Email: sales@jumo.co.uk
Internet: www.jumo.co.uk

JUMO Process Control, Inc.
6733 Myers Road
East Syracuse, NY 13057, USA
Phone: +1 315 437 5866
Fax: +1 315 437 5860
Email: info.us@jumo.net
Internet: www.jumousa.com

RTD temperature probe for heat meter, PTB or MID approved

With terminal head form J or B – JUMO HEATtemp	902424
With terminal head for direct mounting (type DL) – JUMO HEATtemp	902454
With terminal head for thermowells (type PL) – JUMO HEATtemp	902464
With connecting cable for direct mounting (type DS/DL) – JUMO HEATtemp	902455
With connecting cable – JUMO HEATtemp	902425
With terminal head form J or B – JUMO HEATtemp	902434
With terminal head for thermowells (type PL) – JUMO HEATtemp	902437
With connecting cable – JUMO HEATtemp	902435

Installation locations for temperature probes

Various types	902440

Installation locations and accessories for temperature probes

Various types	902442

Indoor, outdoor and channel RTD temperature probe

Various types	902520

RTD surface temperature probes

Various types	902550

Test equipment for temperature and its traceability

Various types	902721

RTD temperature probes for the food and pharmaceutical industries

Various types	902810
Hygienic thermowells for temperature probes	902812
JUMO Dtrans T100 – Screw-in RTD temperature probe with/without transmitter	902815

RTD temperature probe for process technology, optional ignition protection type Ex "d" and Ex "i"

Various types JUMO PROCESStemp	902820

ATEX-/IECEx RTD temperature probe with connecting cable

Various types	902821

JUMO GmbH & Co. KG
Delivery address: Mackenrodtstraße 14
36039 Fulda, Germany
Postal address: 36035 Fulda, Germany
Phone: +49 661 6003-0
Fax: +49 661 6003-607
Email: mail@jumo.net
Internet: www.jumo.net

JUMO Instrument Co. Ltd.
JUMO House
Temple Bank, Riverway
Harlow, Essex, CM20 2DY, UK
Phone: +44 1279 63 55 33
Fax: +44 1279 62 50 29
Email: sales@jumo.co.uk
Internet: www.jumo.co.uk

JUMO Process Control, Inc.
6733 Myers Road
East Syracuse, NY 13057, USA
Phone: +1 315 437 5866
Fax: +1 315 437 5860
Email: info.us@jumo.net
Internet: www.jumousa.com

Push-in RTD temperature probe

Steam-tight version JUMO STEAMtemp	902830

Screw-in resistance thermometers

Level and temperature probes for utility vehicles as well as construction and agricultural machinery	902880

RTD temperature probe with CANopen output

JUMO CANtrans T – Various types	902910

RTD temperature probe with IO output

JUMO dTRANS T1000	902915

Wireless measured value

JUMO Wtrans E01 – Measuring probe for humidity, temperature, and CO_2	902928
JUMO Wtrans transmitter – RTD temperature probe with wireless data transmission	902930
JUMO Wtrans receiver with wireless data transmission	902931

Electronic temperature switch

JUMO DELOS T – Electronic temperature switch with display and analog output	902940

Plastic temperature probe

JUMO plastoSENS T04 – Surface-optimized plastic temperature probe	904004

JUMO GmbH & Co. KG
Delivery address: Mackenrodtstraße 14
36039 Fulda, Germany
Postal address: 36035 Fulda, Germany
Phone: +49 661 6003-0
Fax: +49 661 6003-607
Email: mail@jumo.net
Internet: www.jumo.net

JUMO Instrument Co. Ltd.
JUMO House
Temple Bank, Riverway
Harlow, Essex, CM20 2DY, UK
Phone: +44 1279 63 55 33
Fax: +44 1279 62 50 29
Email: sales@jumo.co.uk
Internet: www.jumo.co.uk

JUMO Process Control, Inc.
6733 Myers Road
East Syracuse, NY 13057, USA
Phone: +1 315 437 5866
Fax: +1 315 437 5860
Email: info.us@jumo.net
Internet: www.jumousa.com

Humidity

Accessories

JUMO GmbH & Co. KG
Delivery address: Mackenrodtstraße 14, 36039 Fulda, Germany
Postal address: 36035 Fulda, Germany
Phone: +49 661 6003-0
Fax: +49 661 6003-607
e-mail: mail@jumo.net
Internet: www.jumo.net

JUMO Instrument Co. Ltd.
JUMO House
Temple Bank, Riverway
Harlow, Essex CM20 2DY, UK
Phone: +44 1279 635533
Fax: +44 1279 635262
e-mail: sales@jumo.co.uk
Internet: www.jumo.co.uk

JUMO Process Control, Inc.
8 Technology Boulevard
Canastota, NY 13032, USA
Phone: 315-697-JUMO
1-800-554-JUMO
Fax: 315-697-5867
e-mail: info@jumo.us
Internet: www.jumo.us

Connection diagrams for RTD temperature probes and Thermocouples

To ensure uniform wiring of all temperature probes, JUMO manufactures RTD temperature probes and thermocouples according to the JUMO House Standard.
All wiring instructions required for installation are found in the chart below:

Connection diagrams	RTD temperature probes				Thermocouples	
	2-wire	3-wire	4-wire	2x Pt 100	single	double
Standard LEMOSA connectors	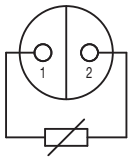	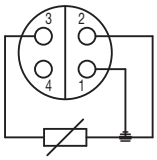	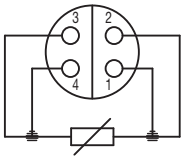	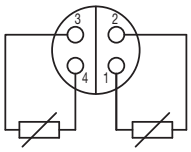	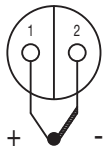	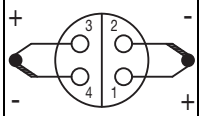
Terminal blocks	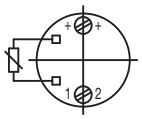	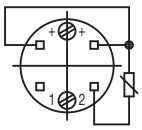	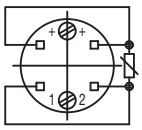	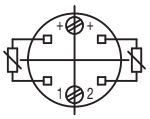	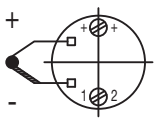	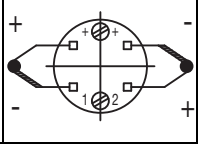

Marking of the stranded conductors on 3-wire and 4-wire RTD temperature probes and 2x Pt and 3x Pt
Generally the stranded conductor dimensions are distinguished by 50 mm and 40 mm length (60 mm for 3x Pt).

2-wire	3-wire	4-wire	2x 3-wire	2x Pt	3x Pt
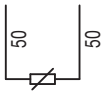	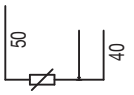	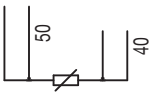	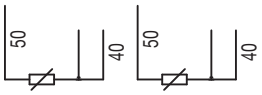	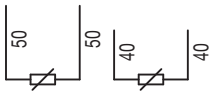	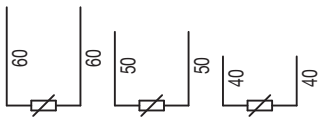

Color coding on cables

		1x 3-wire	
3-wire cable	Color coding: (to DIN 47100) white, brown, green	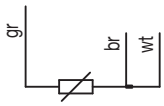	
	Color coding: (to VDE 0293-0) black, blue, brown	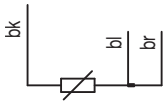	
	Color coding: red, red/blue, white	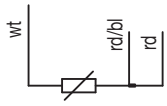	
	Color coding: (to IEC 60751) red, red, white	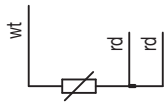	

JUMO GmbH & Co. KG
Delivery address: Mackenrodtstraße 14, 36039 Fulda, Germany
Postal address: 36035 Fulda, Germany
Phone: +49 661 6003-0
Fax: +49 661 6003-607
e-mail: mail@jumo.net
Internet: www.jumo.net

JUMO Instrument Co. Ltd.
JUMO House
Temple Bank, Riverway
Harlow, Essex CM20 2DY, UK
Phone: +44 1279 635533
Fax: +44 1279 635262
e-mail: sales@jumo.co.uk
Internet: www.jumo.co.uk

JUMO Process Control, Inc.
8 Technology Boulevard
Canastota, NY 13032, USA
Phone: 315-697-JUMO
1-800-554-JUMO
Fax: 315-697-5867
e-mail: info@jumo.us
Internet: www.jumo.us

Color coding on cables

		1x 3-wire	1x 4-wire	2x Pt
4-wire cable	Color coding: (to DIN 47100) white, brown, green, yellow	gr br wt	gr ye wt br	gr br ye wt
	Color coding: (to VDE 0293-0) black, black, brown, blue	bk br bl	bk bk br bl	bk bk br bl
	Color coding: red, red/blue, white/blue, white	wt rd/bl rd	rd rd/bl wt/bl wt	rd rd/bl wt/bl wt
	Color coding: (to IEC 60751, not for 2x Pt) red, red, white, white	wt rd rd	rd rd wt wt	rd rd wt wt

		1x 3-wire	1x 4-wire	2x Pt
5-wire cable	Color coding: (to DIN 47100) white, brown, green, yellow, grey	gr br wt	gr ye wt br	gr br ye wt

		2x 3-wire	3x Pt
6-wire cable	Color coding: (to DIN 47100) white, brown, green, yellow, grey, pink	gr br wt ye gy pk	wt br gr ye gy pk
	Color coding: (to VDE 0293-0) black, black, black, red, blue, transparency	bk bk bk transp. bl rd	bl transp. bk bk bk rd
	Color coding: red, red/blue, white/blue, white, blue, blue	wt/bl rd/bl rd wt bl bl	rd rd/bl wt/bl wt bl bl

		1x 2-wire and 2x 3-wire	2x 4-wire
8-wire cable	Color coding: red, red/blue, white/blue white, blue, blue, nature, nature	nt nt wt/bl rd/bl rd wt bl bl	rd rd/bl wt/bl wt bl bl nt nt
	Color coding: red, red, black, black yellow, yellow, white, white	bk bk rd ye ye wt rd wt	rd rd bk bk ye ye wt wt

JUMO GmbH & Co. KG
Delivery address: Mackenrodtstraße 14, 36039 Fulda, Germany
Postal address: 36035 Fulda, Germany
Phone: +49 661 6003-0
Fax: +49 661 6003-607
E-mail: mail@jumo.net
Internet: www.jumo.net

JUMO Instrument Co. Ltd.
JUMO House
Temple Bank, Riverway
Harlow - Essex CM20 2DY, UK
Phone: +44 1279 63 55 33
Fax: +44 1279 63 52 62
E-mail: sales@jumo.co.uk
Internet: www.jumo.co.uk

JUMO Process Control, Inc.
8 Technology Boulevard
Canastota, NY 13032, USA
Phone: 315-697-JUMO
1-800-554-JUMO
Fax: 315-697-5867
E-mail: info@jumo.us
Internet: www.jumo.us

Construction and application of thermocouples

The thermoelectric effect
The effect responsible for the action of thermocouples is the **Seebeck effect**. If a temperature difference exists along a wire, this will cause a displacement of electrical charge. The amount of the charge displacement depends on the electrical characteristics of the chosen material. If two wires of different materials are joined at one point and then subjected to a temperature, then a voltage difference will be generated between the open ends of the two wires. This voltage depends on the temperature difference along the two wires. In order to be able to measure the temperature at the junction, the temperature at the open end must be known. If the temperature of the open end is not known, then it must be extended (by a compensating cable) into the zone of known temperature (reference junction, usually referred to as the "cold junction").

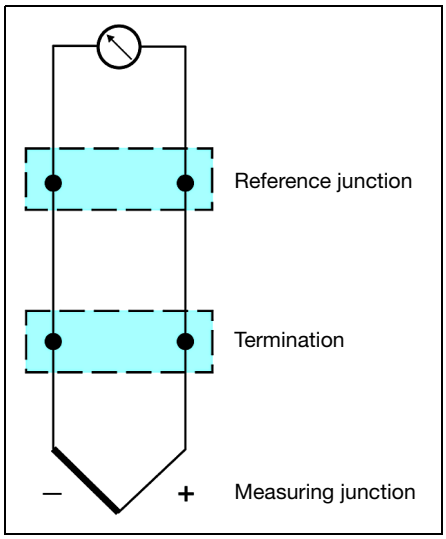

Fig. 1: Measuring circuit (schematic)

The temperature of the reference junction must be known and constant. If no constant reference junction temperature is available, the reference junction has to be arranged as a thermostat, or its temperature has to be determined by means of a second sensor.

Thermocouples
to EN 60 584 and DIN 43 710
From the variety of possible metal combinations, certain ones have been selected (Tables 1 and 2) and their voltage tables and permitted tolerances incorporated in standard specifications (Fig. 2 and Tables 3 and 4).
Note that two Fe-Con thermocouples (Type J and L) and two Cu-Con thermocouples (Type T and U) have been standardized in both EN 60 584 and DIN 43 710.
The "old" thermocouples L and U are now being used less frequently than the thermocouples J and T to EN 60 584.

Thermocouple		Maximum temperature	Defined up to	Positive limb	Negative limb
Fe-Con	J	750°C	1200°C	black	white
Cu-Con	T	350°C	400°C	brown	white
NiCr-Ni	K	1200°C	1370°C	green	white
NiCr-Con	E	900°C	1000°C	violet	white
NiCrSi-NiSi	N	1200°C	1300°C	mauve	white
Pt10Rh-Pt	S	1600°C	1540°C	orange	white
Pt13Rh-Pt	R	1600°C	1760°C	orange	white
Pt30Rh-Pt6Rh	B	1700°C	1820°C	no data	white

Table 1: Thermocouples to EN 60 584

Thermocouple		Maximum temperature	Defined up to	Positive limb	Negative limb
Fe-Con	L	700°C	900°C	red	blue
Cu-Con	U	400°C	600°C	red	brown

* Continuous temperature in pure air
Table 2: Thermocouples to DIN 43 710

The individual thermocouples are not compatible, because of their differing alloy compositions. If a Fe-Con thermocouple Type L is connected to an instrument linearized for Type J, the difference in the thermal voltages leads to errors of up to several °C. The same applies to thermocouples Type U and T.

The maximum temperature represents the limit to which a tolerance is specified.
The value under "defined to" is the temperature limit to which the thermal voltage is covered by standard specifications.
In the thermocouples listed above, the first limb is always the positive one. The color codes apply both to the thermocouple itself and to the compensating cables. If the thermocouple wires are not color coded, the following differences may help to identify them.

Fe-Con: positive limb is magnetic
Cu-Con: positive limb is copper colored
NiCr-Ni: negative limb is magnetic
PtRh-Pt: negative limb is softer

These distinctions do not apply to the compensating cables.
The thermocouples are insulated inside the fittings using ceramic materials. PVC, silicone, PTFE or glass fiber are used in the cables.

Tolerances
EN 60 584 defines three tolerance classes for thermocouples. They normally apply to thermowires between 0.25 to 3mm diameter and to the condition as supplied. The standard cannot cover any possible subsequent ageing, since this largely depends on the conditions of use. The temperature limits specified for the tolerance classes are not necessarily the recommended operating temperature limits (see Tables 3 and 4).
The larger value applies in each case.

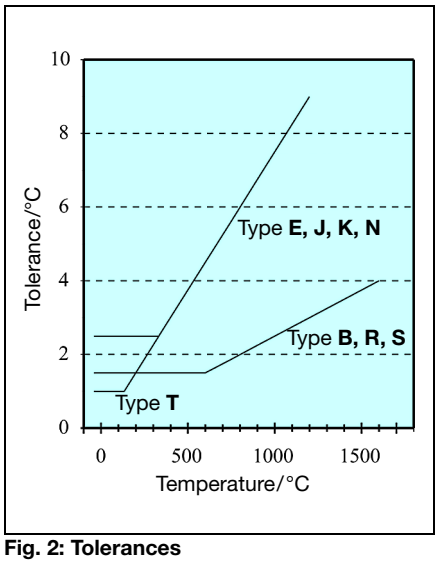

Fig. 2: Tolerances

JUMO GmbH & Co. KG
Delivery address: Mackenrodtstraße 14, 36039 Fulda, Germany
Postal address: 36035 Fulda, Germany
Phone: +49 661 6003-0
Fax: +49 661 6003-607
E-mail: mail@jumo.net
Internet: www.jumo.net

JUMO Instrument Co. Ltd.
JUMO House
Temple Bank, Riverway
Harlow - Essex CM20 2DY, UK
Phone: +44 1279 63 55 33
Fax: +44 1279 63 52 62
E-mail: sales@jumo.co.uk
Internet: www.jumo.co.uk

JUMO Process Control, Inc.
8 Technology Boulevard
Canastota, NY 13032, USA
Phone: 315-697-JUMO
1-800-554-JUMO
Fax: 315-697-5867
E-mail: info@jumo.us
Internet: www.jumo.us

Linearity

The voltage produced by a thermocouple is not linear with temperature and must therefore be liniearized by the subsequent electronics. Digital instruments are programmed with linearization tables, or appropriate calibration values have to be entered by the user. Analog instruments are often provided with non-linear scales. The characteristics of thermocouples (Fig. 3) are defined by voltage tables to ensure full interchangeability.

This means, for example, that a Fe-Con thermocouple Type J can be replaced by any other thermocouple of this type irrespective of the manufacturer, without requiring any recalibration of the instrument to which it is connected.

Compensating cables to EN and DIN

Compensating cables for thermocouples have their electric and mechanical properties defined in the EN 60 584 or DIN 43 714 standards. They are made either of the same material as the thermocouple itself (thermocables, extension cables) or from special materials with the same thermo-electric properties within restricted temperature ranges (compensating cables proper). The use of compensating cables saves the extra cost in the case of certain noble metals.
Compensating cables consist of twisted cores and are identified by a color code and code letters as follows:

Letter 1: code letter for the thermocouple
Letter 2: X: same material as thermocouple
C: special material
Letter 3: several types of compensating cable can be distinguished by a third letter.

Example:
KX: compensating cable for NiCr-Ni thermocouple Type K made from thermocouple material
RCA: compensating cable for PtRh-Pt thermocouple Type R, made from special material Type A

The tolerance classes 1 and 2 are defined for compensating cables. Class 1 has closer tolerances, which can only be met by extension cables made from the same material as the thermocouple, i.e. the X-type.

Compensating cables proper are normally supplied to Class 2. Table 5 shows the tolerances for the different compensating cable classes.
The operating temperature range in Table 5 covers the temperature to which the entire cable may be exposed, including the thermocouple terminations, without exceeding the specified tolerances. Because of the non-linearity of the thermal voltage, the tolerances in mV or °C only apply to the measured temperatures specified in the right column.

This means, for example:

A thermocouple Type J is connected to a compensating cable Type JX, Class 2. If the measured temperature remains constant at 500°C and the temperature of the terminals and/or the compensating cable varies from -25 to +200°C, then the indicated temperature varies by not more than ±2.5°C.

Thermocouple		Tolerance classes			
Fe-Con	J	Class 1	- 40 to + 750°C:	±0.004 x t	or ±1.5°C
		Class 2	- 40 to + 750°C:	±0.0075 x t	or ±2.5°C
		Class 3			
Cu-Con	T	Class 1	- 40 to + 350°C:	±0.004 x t	or ±0.5°C
		Class 2	- 40 to + 350°C:	±0.0075 x t	or ±1.0°C
		Class 3	-200 to + 40°C:	±0.0015 x t	or ±1.0°C
Ni-CrNi	K	Class 1	- 40 to +1000°C:	±0.004 x t	or ±1.5°C
and		Class 2	- 40 to +1200°C:	±0.0075 x t	or ±2.5°C
NiCrSi-NiSi	N	Class 3	-200 to + 40°C:	±0.015 x t	or ±2.5°C
NiCr-Con	E	Class 1	- 40 to + 800°C:	±0.004 x t	or ±1.5°C
		Class 2	- 40 to + 900°C:	±0.0075 x t	or ±2.5°C
		Class 3	-200 to + 40°C:	±0.015 x t	or ±2.5°C
Pt10Rh-Pt	S	Class 1	0 to +1600°C:	±[1+(t-1100) x 0.003]	or ±1.0°C
and		Class 2	- 40 to +1600°C:	±0.0025 x t	or ±1.5°C
Pt13Rh-Pt	R	Class 3			
Pt30Rh-		Class 1			
Pt6Rh	B	Class 2	+600 to +1700°C:	±0.0025 x t	or ±1.5°C
		Class 3	+600 to +1700°C:	±0.005 x t	or ±4.0°C

Table 3: Tolerances to EN 60 584

Thermocouple		Tolerances	
Cu-Con	U	+100 to +400 °C:	±3°C
		+400 to +600 °C:	±0.0075 x t
Fe-Con	L	+100 to +400 °C:	±3°C
		+400 to +900 °C:	±0.0075 x t

Table 4: Tolerances to DIN 43 710 (1977)

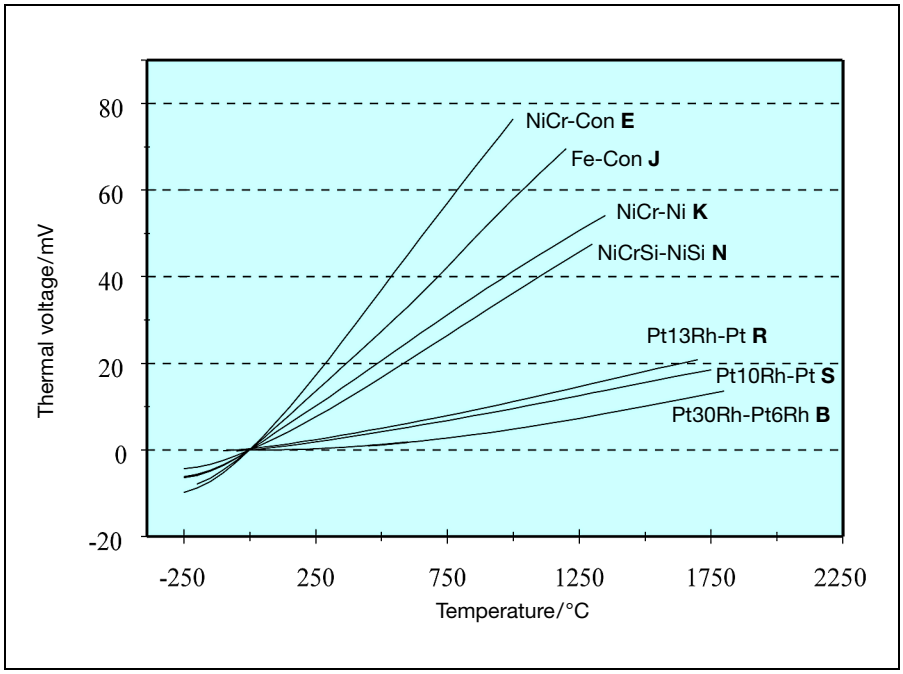

Fig. 3: Characteristics of thermocouples to EN 60 584

JUMO GmbH & Co. KG
Delivery address: Mackenrodtstraße 14, 36039 Fulda, Germany
Postal address: 36035 Fulda, Germany
Phone: +49 661 6003-0
Fax: +49 661 6003-607
E-mail: mail@jumo.net
Internet: www.jumo.net

JUMO Instrument Co. Ltd.
JUMO House
Temple Bank, Riverway
Harlow - Essex CM20 2DY, UK
Phone: +44 1279 63 55 33
Fax: +44 1279 63 52 62
E-mail: sales@jumo.co.uk
Internet: www.jumo.co.uk

JUMO Process Control, Inc.
8 Technology Boulevard
Canastota, NY 13032, USA
Phone: 315-697-JUMO
1-800-554-JUMO
Fax: 315-697-5867
E-mail: info@jumo.us
Internet: www.jumo.us

Color coding of compensating cables

The color coding of compensating cables is laid down in EN 60 584 and DIN 43 713 (1990). For thermocouples to EN 60 584 (Table 6) this means:
The positive limb has the same color as the sheath, the negative limb is white. The “old” thermocouples Type L and U to DIN 43 713 (Table 7) are coded differently.

There are no details for the Pt30Rh-Pt6Rh thermocouple Type B. Ordinary copper connecting cables (plain copper) can be used as compensating cables in this case.

According to DIN 43 714, the cable cores are twisted together for electromagnetic screening. Additional screening by foil or braiding can be provided. The insulation resistance between the cores and between cores and screening must not be less than $10^7 \Omega \times m^{-1}$ at the maximum temperature;
the breakdown voltage exceeds 500 VAC.

In addition to these color codes for compensating cables, there are also those according to DIN 43 714, 1979 (Table 8). They differ in certain respects from the ones mentioned above.

Where there are no color codes, it is not possible to identify cables by magnetism, color or hardness. Compensating cables Type KCA and KCB differ from the thermocable KX and the thermocouple Type K by having a magnetic positive limb.

Thermo-couple and wire type	Tolerance classes 1	2	Operating temperature range [°C]	Measuring temperature [°C]
JX	± 85µV/±1.5°C	± 140µV/±2.5°C	-25 to +200	500
TX	± 30µV/±0.5°C	± 60µV/±1.0°C	-25 to +100	300
EX	± 120µV/±1.5°C	± 200µV/±2.5°C	-25 to +200	500
KX	± 60µV/±1.5°C	± 100µV/±2.5°C	-25 to +200	900
NX	± 60µV/±1.5°C	± 100µV/±2.5°C	-25 to +200	900
KCA	-	± 100µV/±2.5°C	0 to +150	900
KCB	-	± 100µV/±2.5°C	0 to +100	900
NC	-	± 100µV/±2.5°C	0 to +150	900
RCA	-	± 30µV/±2.5°C	0 to +100	1000
RCB	-	± 60µV/±5.0°C	0 to +200	1000
SCA	-	± 30µV/±2.5°C	0 to +100	1000
SCB	-	± 60µV/±5.0°C	0 to +200	1000

Table 5: Tolerances for thermocables and compensating cables

Thermocouple	Type	Sheath	Positive limb	Negative limb
Cu-Con	T	brown	brown	white
Fe-Con	J	black	black	white
NiCr-Ni	K	green	green	white
NiCrSi-NiSi	N	mauve	mauve	white
NiCr-Con	E	violet	violet	white
Pt10Rh-Pt	S	orange	orange	white
Pt13Rh-Pt	R	orange	orange	white

Table 6: Color coding for thermocouples to EN 60 584

Thermocouple	Type	Sheath	Positive limb	Negative limb
Fe-Con	L	blue	red	blue
Cu-Con	U	brown	red	brown

Table 7: Color coding for thermocouples to DIN 43 713

Thermocouple	Type	Sheath	Positive limb	Negative limb
NiCr-Ni	K	green	red	green
Pt10Rh-Pt	S	white	red	white
Pt13Rh-Pt	R	white	red	white

Table 8: Color coding for thermocouples to DIN 43 714 (1979)

JUMO GmbH & Co. KG
Delivery address: Mackenrodtstraße 14, 36039 Fulda, Germany
Postal address: 36035 Fulda, Germany
Phone: +49 661 6003-0
Fax: +49 661 6003-607
E-mail: mail@jumo.net
Internet: www.jumo.net

JUMO Instrument Co. Ltd.
JUMO House
Temple Bank, Riverway
Harlow - Essex CM20 2DY, UK
Phone: +44 1279 63 55 33
Fax: +44 1279 63 52 62
E-mail: sales@jumo.co.uk
Internet: www.jumo.co.uk

JUMO Process Control, Inc.
8 Technology Boulevard
Canastota, NY 13032, USA
Phone: 315-697-JUMO
1-800-554-JUMO
Fax: 315-697-5867
E-mail: info@jumo.us
Internet: www.jumo.us

Construction of thermocouples

Apart from the virtually unlimited number of special models, there are also those whose components are completely defined by standard specifications.

Thermocouples with terminal head

These **thermocouples** are of modular construction, consisting of the thermocouple proper, insert tube, terminal plate, protection tube and the terminal head. A flange or a screw fitting can be provided for mounting in position.

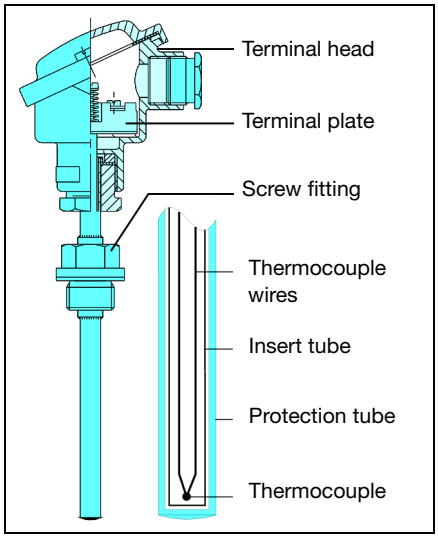

Fig. 4: Construction of a thermocouple

The **measuring insert** is a completely fabricated unit consisting of thermocouple sensor and terminal plate, with the thermocouple contained in an **insert tube** of 6 or 8 mm diameter made from bronze SnBz6 to DIN 17 681 (up to 300°C) or nickel. It is inserted into the actual protection tube, which is often made from stainless steel. The tip of the insert tube is in full contact with the inside of the protection tube end plate in order to ensure good heat transfer. The fixing screws of the insert are backed by springs, to maintain good contact even with differential expansion between insert tube and protection tube. This arrangement ensures that the insert can be readily replaced.
The thermometers are available in single and twin versions. Their dimensions are laid down in DIN 43 735. If no measuring insert is used, the thermocouple is mounted directly in the **protection tube** using ceramic insulation.
The choice of the protection tube material depends on the thermal, chemical and mechanical conditions on site.

Metal protection tubes in high-temperature steel, e.g. Material Ref. 1.4749, are used up to 1150°C. The corrosion resistance of the protection tube materials is described in DIN 43 720.
These details are provided for general information only, and the user remains responsible for fully evaluating the protection tube material for its suitability to the operating conditions on site. The indicated temperature refers to the use without mechanical loads and (unless otherwise specified) in clean air.

Ceramic protection tubes are employed where local conditions prevent the use of metal fittings, either for chemical reasons or because of high temperatures. Their main application is at temperatures between 1000 and 1650°C. They may be in direct contact with the medium, or may be used as a gas-tight inner tube to separate the thermocouple from the actual protection tube. Even hair cracks may lead to a poisoning and drifting of the thermocouple. The resistance of a ceramic to temperature shock increases with its thermal conductivity and the tensile strength, and is larger for a lower thermal expansion coefficient. The wall thickness of the material is also important; thin-walled tubes are preferable to those with larger wall thicknesses.

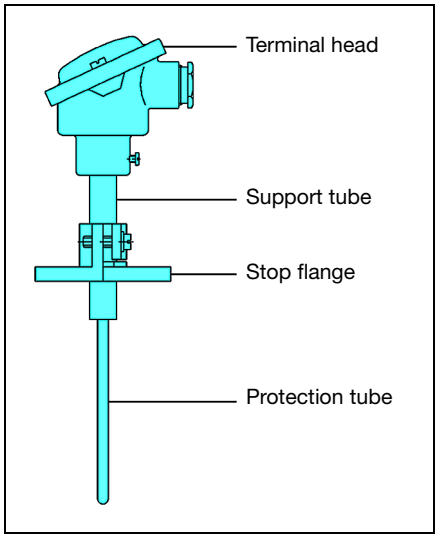

Fig. 5: Thermocouple with ceramic protection tube

In the case of noble thermocouples, the ceramic has to be of the highest purity.
Platinum thermocouples are very sensitive to poisoning by foreign chemical elements. These include especially silicon, arsenic, phosphorus, sulfur and boron. Special care must therefore be taken in high-temperature fittings to ensure that insulation and protection tube do not contain such elements, as far as this is possible. A particularly damaging material is SiO_2. Poisoning takes place much more rapidly in a neutral or reducing atmosphere and is caused by the reduction of SiO_2 to SiO, which reacts with platinum to form Pt_5Si_2. As little as 0.2% SiO_2 in the insulation of the protection tube material is sufficient in a reducing atmosphere to form such brittle silicides.

Thermocouples with protection tubes that are permeable to gas can therefore not be used in a reducing atmosphere, such as in annealing furnaces, but are permitted in an oxidizing atmosphere or under a protective gas blanket. If an inner tube of gas-tight ceramic is used, the outer protection tube can be permeable to gas.
In the high-temperature range, the insulation properties of the materials become important. Protection tubes in aluminium-oxide (KER 610) and magnesium oxide exhibit appreciable conductivity above 1000°C. This produces a shunt effect which introduces errors into the thermocouple signal. The insulation of ceramics deteriorates with increasing alkali content. Pure aluminium oxide ceramics exhibit the best characteristics. KER 710 is therefore used for 4-bore insulators and protection tubes.
Two gas-tight ceramics are described below, whose characteristics are defined in DIN 43 724:

KER 710 is a pure oxide ceramic consisting of more than 99.7% Al_2O_3, with traces of MgO, Si_2O and Na_2O, which is fire resistant up to 1900°C and has a melting point of 2050°C. It is the best ceramic material, with an insulation resistance of $10^7 \Omega$ x cm at 1000°C and good strength under alternating temperatures, thanks to its high thermal conductivity and relatively low thermal expansion. With platinum thermocouples, both the insulation rod and the protection tube must be in KER 710.

JUMO GmbH & Co. KG
Delivery address: Mackenrodtstraße 14, 36039 Fulda, Germany
Postal address: 36035 Fulda, Germany
Phone: +49 661 6003-0
Fax: +49 661 6003-607
E-mail: mail@jumo.net
Internet: www.jumo.net

JUMO Instrument Co. Ltd.
JUMO House
Temple Bank, Riverway
Harlow - Essex CM20 2DY, UK
Phone: +44 1279 63 55 33
Fax: +44 1279 63 52 62
E-mail: sales@jumo.co.uk
Internet: www.jumo.co.uk

JUMO Process Control, Inc.
8 Technology Boulevard
Canastota, NY 13032, USA
Phone: 315-697-JUMO
1-800-554-JUMO
Fax: 315-697-5867
E-mail: info@jumo.us
Internet: www.jumo.us

The material **KER 610** has a higher alkali content (60% Al_2O_3, 37% SiO_2, 3% alkali) and, therefore, a low insulation resistance of about $10^4\Omega$ x cm at 1000°C. Because of the high silicon dioxide content, it cannot be used in a reducing atmosphere. Compared with KER 710, it has only one-ninth the thermal conductivity; its mechanical stability is good.
The advantage of KER 610 is its price, which is only about one-fifth that of KER 710.

For the **terminal heads**, DIN 43 729 defines the two forms A and B, which differ in size and also slightly in style.

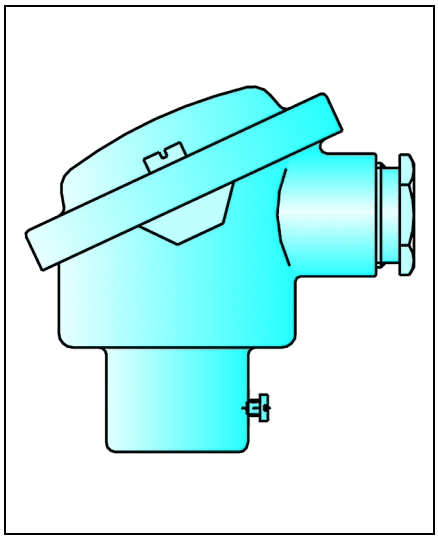

Fig. 6: Terminal head to DIN 43 729, Form B

The material used is aluminium.

Protection is not covered by a standard; it is usually splash-proof to IP54. The nominal diameter of the bore to take the protection tube is as follows:

Form A: 22, 24 or 32 mm.
Form B: 15 mm or thread M 24 x 1.5.

Thermocouples to DIN EN 14 597
Thermocouples for use with temperature controllers or temperature limiters for indirect heating systems must meet the requirements of DIN EN 14 597 and are subject to additional TUV approval.

The thermocouples must withstand temperatures that are 15% above the upper temperature limit for at least one hour and have to meet certain response times in relation to the medium (e.g. air $t_{0.63}$ = 120sec). The thermometers are designed to withstand mechanical loads caused by external pressure and the flow velocity of the medium at the operating temperature.

No modifications to the thermometers are permitted without obtaining a fresh TUV approval!

Thermocouples with compensating cable
Thermocouples with an attached compensating cable do not have a measuring insert or a terminal head. The thermocouple is directly connected to the thermocable or the compensating cable and enclosed in the protection tube. Strain relief is provided by crimping the protection tube at the entry of the compensating cable.
The thermocouple is normally insulated; alternatively, it can be welded to the protection tube tip for improved thermal contact. The maximum temperature is determined mainly by the thermal stability of the cable sheath and insulation. Table 9 shows as examples some insulation materials and their upper temperature limit.

Material	Max. temperature °C
PVC	80
Silicone	180
PTFE	260
Glass fiber	350

Table 9: Temperature limits of insulation materials

There are many different thermometer designs, and they are often adapted to suit particular customer requirements.
Some characteristic data are given below:

- diameter: 0.5 – 6mm
- protection tube length: 35 – 150mm
- protection tube material: stainless steel, heat-resistant steel or brass
- mounting: fixed or sliding flange, fixed thread or clamp

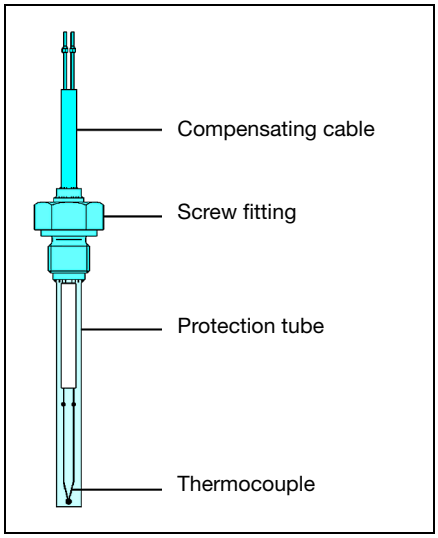

Fig. 7: Construction of a thermocouple with compensating cable

Thermocouples with bayonet fitting
Another version incorporates a bayonet fitting. The stainless steel pressure spring (Material Ref. 1.4310) also acts as a cable protector and ensures uniform pressure of the protection tube and sensing tip against the bottom of the bore.

The fitting length can be varied by rotating the bayonet lock. Bayonet fittings and sockets are available in 12, 15 and 16 mm diameters.

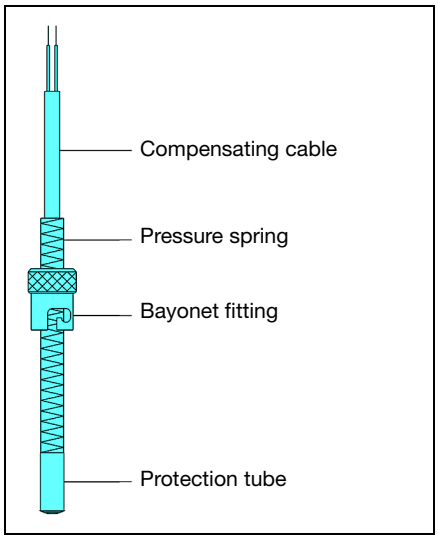

Fig. 8: Thermocouple with bayonet fitting

Thermocouples with a bayonet fitting are largely employed for measuring temperatures in solids, on bearings and moulding tools, e.g. in the plastics industry. Because of the special shape of the sensing tip, these thermo-

JUMO GmbH & Co. KG
Delivery address: Mackenrodtstraße 14, 36039 Fulda, Germany
Postal address: 36035 Fulda, Germany
Phone: +49 661 6003-0
Fax: +49 661 6003-607
E-mail: mail@jumo.net
Internet: www.jumo.net

JUMO Instrument Co. Ltd.
JUMO House
Temple Bank, Riverway
Harlow - Essex CM20 2DY, UK
Phone: +44 1279 63 55 33
Fax: +44 1279 63 52 62
E-mail: sales@jumo.co.uk
Internet: www.jumo.co.uk

JUMO Process Control, Inc.
8 Technology Boulevard
Canastota, NY 13032, USA
Phone: 315-697-JUMO
1-800-554-JUMO
Fax: 315-697-5867
E-mail: info@jumo.us
Internet: www.jumo.us

couples are suitable for both flat-bottom and cone-shaped bores.

Mineral-insulated thermocouples
Mineral-insulated thermocouples consist of a thin-walled sheath of stainless or high-temperature steel (Inconel 600) in which thermocouple wires are embedded in compressed fire-resistant magnesium oxide.

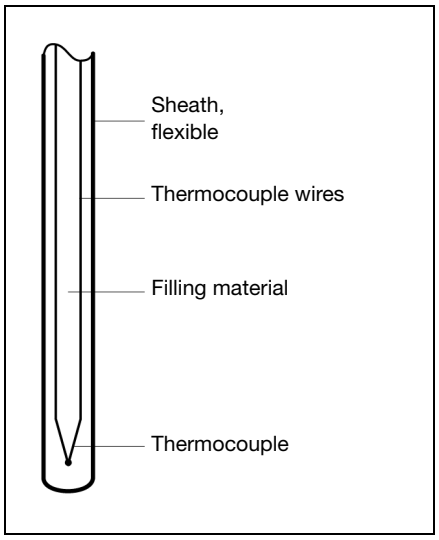

Fig. 9: Construction of a mineral-insulated thermocouple

Excellent heat transfer between sheath and thermocouple enables a fast response ($t_{0.5}$ from 0.1sec) and high accuracy.
The shock-resistant construction ensures a long life.
The flexible **sheath**, minimum bending radius 5 times the external diameter of 0.5 – 6mm, permits temperature measurement in locations where access is difficult. Thanks to their special features, mineral-insulated thermocouples are used in chemical plant, power stations, pipelines, on test beds and wherever resistance to vibration, flexibility and easy installation are required.

Connection of thermocouples

The length of the compensating cable is of minor importance in view of the low internal resistance. With long distances and a small cross-section, the resistance of the compensating cable may, however, become relatively large.
In order to avoid errors, the resistance of the input circuit of the instrument must be at least 1000 times the resistance of the thermocouple connected.

It is essential to use only compensating cables of the same material as the thermocouple, or with the same thermoelectric characteristics, otherwise an additional thermocouple is formed at the connection point. The compensating cable has to be run up to the cold junction. The correct polarity must be observed when connecting up the thermocouple.

Effect on short-circuit and break

A thermocouple produces no voltage if the measured temperature is equal to the cold junction temperature.

If a thermocouple or compensating cable is short-circuited, a new measuring point is produced at the location of the short-circuit. If it occurs in the terminal head, for example, the temperature measurement relates not to the actual measuring point, but to the terminal head. If there is a break in the measuring circuit, the instrument will show the cold junction temperature.

Measurement errors arising from the installation

A temperature probe can only indicate the temperature of its temperature-sensitive sensor. This temperature is not necessarily the same as that for the medium which is intended to be measured. The thermometer is not installed purely in the medium, but is also thermally linked to its surroundings. This results in a temperature shift (thermal conduction error). This error depends on a number of factors. These include: the temperature of the medium, ambient temperature, thermal characteristics of the medium, flow velocity and the immersion length of the thermometer. A lasting reduction of this error requires a suitable choice of installation site, whereby the immersion depth of the thermometer in the medium plays a particularly important role. As a rough guide for measurement in liquid media, the immersion depth should be at least 15 times the thermometer diameter. For critical applications, or to meet requirements for very high accuracy, the installation-induced error should be checked by a test measurement. To do this, the thermometer is pulled out of the normal installation position by about 10 mm, and the temperature indication is noted.

Fault finding

One of the most frequent faults is the omission or the incorrect choice of the compensating cable. The thermocouple can be readily checked using a simple continuity tester or ohmmeter. The operation of the thermocouple and its correct polarity can be tested with a voltmeter (millivolt range), by heating its sensing tip.

Possible connection errors and their effects:

- *Indicator shows room temperature*
  thermocouple or cable open-circuit.
- *Indication has correct value but negative sign*
  reversed polarity at the indicator.
- *Indication cleary too high or too low*
  a) incorrect linearization of the indicator.
  b) incorrect compensating cable or connections reversed.
- *Indication too high or too low by a fixed amount*
  incorrect cold junction temperature.
- *Indication correct but drifting slowly in spite of constant measured temperature*
  cold junction temperature not constant or not evaluated correctly.
- *Temperature still indicated with one limb disconnected*
  a) electromagnetic interference picked up on the input cable.
  b) parasitic voltages produced due to missing or faulty electrical isolation e.g. in furnaces.
- *High reading when both thermocouple limbs are disconnected*
  a) electromagnetic interference picked up on the input cable
  b) parasitic galvanic voltages, e.g. due to damp insulation in the compensating cable.

Safety notes
All welded joints on thermometers and pockets are monitored through a quality assurance system to DIN 8563, Part 113. Special regulations apply to certain applications (e.g. pressure vessels) according to Section 24 of the German Trade Regulations. Where the user specifies such special requirements, the weld is monitored according to EN 287 and EN 288.

JUMO GmbH & Co. KG
Delivery address: Mackenrodtstraße 14, 36039 Fulda, Germany
Postal address: 36035 Fulda, Germany
Phone: +49 661 6003-0
Fax: +49 661 6003-607
E-mail: mail@jumo.net
Internet: www.jumo.net

JUMO Instrument Co. Ltd.
JUMO House
Temple Bank, Riverway
Harlow - Essex CM20 2DY, UK
Phone: +44 1279 63 55 33
Fax: +44 1279 63 52 62
E-mail: sales@jumo.co.uk
Internet: www.jumo.co.uk

JUMO Process Control, Inc.
8 Technology Boulevard
Canastota, NY 13032, USA
Phone: 315-697-JUMO
1-800-554-JUMO
Fax: 315-697-5867
E-mail: info@jumo.us
Internet: www.jumo.us

Pressure loading for temperature probes
The pressure resistance of protection fittings, such as are used for electric thermometers, depends largely on the different process parameters.
These include:
- temperature
- pressure
- flow velocity
- vibration

In addition, physical properties, such as material, fitting length, diameter and type of process connection have to be taken into account.

The following diagrams are taken from DIN 43 763 and show the load limit for the different basic types in relation to the temperature and the fitting length, as well as the flow velocity, temperature and medium

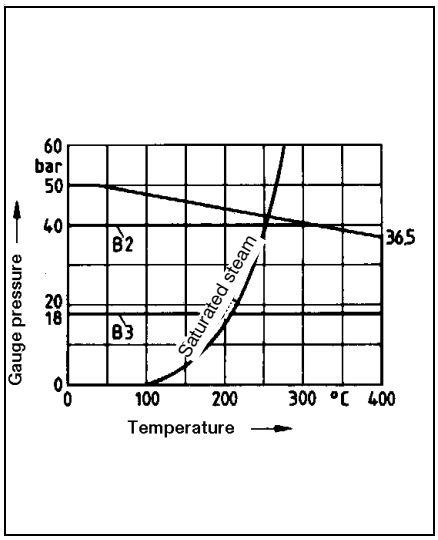

Fig. 10: Pressure loading for protection tube Form B

stainless steel 1.4571
velocity up to 25m/sec in air
velocity up to 3m/sec in water

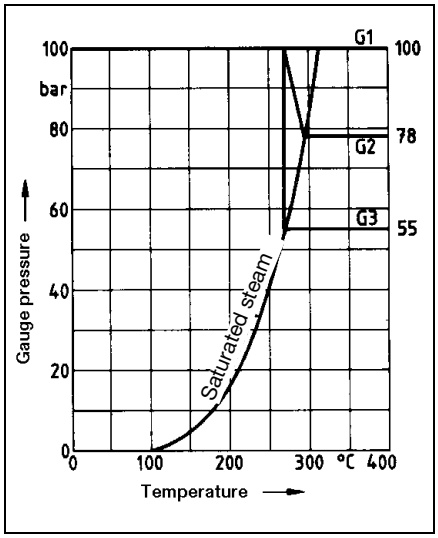

Fig. 11: Pressure loading for protection tube Form G

stainless steel 1.4571
velocity up to 40m/sec in air
velocity up to 4m/sec in water

JUMO GmbH & Co. KG
Delivery address: Mackenrodtstraße 14, 36039 Fulda, Germany
Postal address: 36035 Fulda, Germany
Phone: +49 661 6003-0
Fax: +49 661 6003-607
E-mail: mail@jumo.net
Internet: www.jumo.net

JUMO Instrument Co. Ltd.
JUMO House
Temple Bank, Riverway
Harlow - Essex CM20 2DY, UK
Phone: +44 1279 63 55 33
Fax: +44 1279 63 52 62
E-mail: sales@jumo.co.uk
Internet: www.jumo.co.uk

JUMO Process Control, Inc.
8 Technology Boulevard
Canastota, NY 13032, USA
Phone: 315-697-JUMO
1-800-554-JUMO
Fax: 315-697-5867
E-mail: info@jumo.us
Internet: www.jumo.us

As explained in the standard, the values indicated are guide values, which have to be individually examined for the specific application. Slight differences in the measurement conditions may suffice to destroy the protection tube.
If, when ordering an electric thermometer, the protection fitting needs to be checked, the load type and the limit values must be specified.

Fig. 12 shows the load limits (guide values) for different tube dimensions on a variety of additional thermometer designs. The maximum pressure loading of cylindrical protection tubes is shown in relation to the wall thickness with different tube diameters.
The data refer to protection tubes in stainless steel 1.4571, 100mm fitting length, 10m/sec flow velocity in air, or 4m/sec in water, and a temperature range from -20 to +100°C. A safety factor of 1.8 has been taken into account. For higher temperatures or different materials, the maximum pressure loading has to be reduced by the percentage values given in the table.

Material	Temperature	Reduction
CrNi 1.4571	up to +200°C	-10%
CrNi 1.4571	up to +300°C	-20%
CrNi 1.4571	up to +400°C	-25%
CrNi 1.4571	up to +500°C	-30%
CuZn 2.0401	up to +100°C	-15%
CuZn 2.0401	up to +175°C	-60%

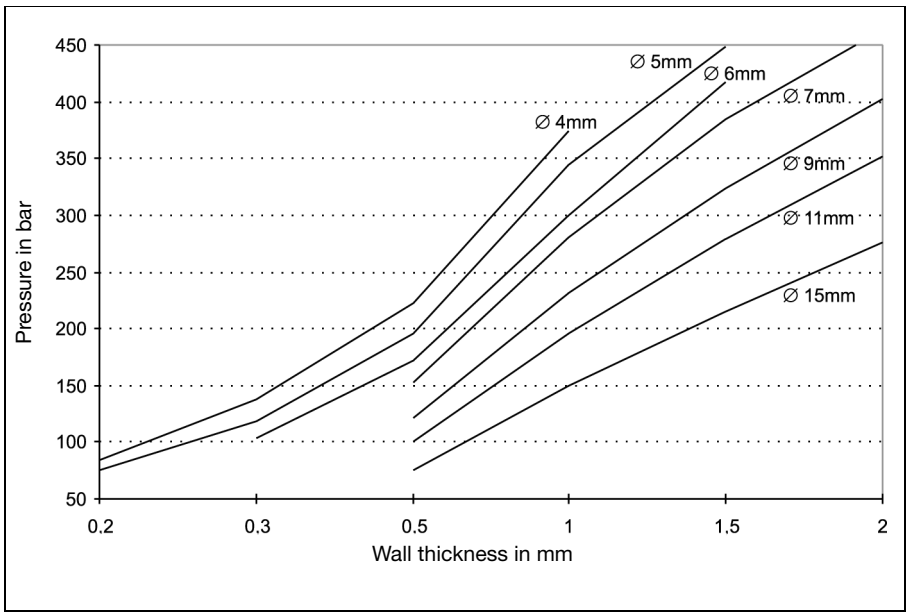

Fig. 12: Load limits on protection tubes for various tube dimensions

JUMO GmbH & Co. KG
Delivery address: Mackenrodtstraße 14, 36039 Fulda, Germany
Postal address: 36035 Fulda, Germany
Phone: +49 661 6003-0
Fax: +49 661 6003-607
E-mail: mail@jumo.net
Internet: www.jumo.net

JUMO Instrument Co. Ltd.
JUMO House
Temple Bank, Riverway
Harlow - Essex CM20 2DY, UK
Phone: +44 1279 63 55 33
Fax: +44 1279 63 52 62
E-mail: sales@jumo.co.uk
Internet: www.jumo.co.uk

JUMO Process Control, Inc.
8 Technology Boulevard
Canastota, NY 13032, USA
Phone: 315-697-JUMO
1-800-554-JUMO
Fax: 315-697-5867
E-mail: info@jumo.us
Internet: www.jumo.us

Pressure test for thermometer protection fittings
The welded protection fittings of JUMO thermometers are subjected to a leakage test or a pressure test, depending on the construction of the protection fitting.

Thermometers which are manufactured to DIN or to application-specific guidelines (chemical or petrochemical plant, pressure vessel regulation, steam boilers) require different pressure tests according to the specific application.
If the thermometers are to be manufactured to such standards or guidelines, then the required tests or standards and/or guidelines have to be specified when ordering.

Scope of test
Tests can be carried out on each individual protection fitting and documented in a test report or acceptance certificate to EN 10 204 (at extra cost).

Type of test
Tests can be performed on protection fittings up to a fitting length of 1050mm with flange connection DN25 or screw connection up to 1" thread size.

The following tests can be carried out:

Test type	Test medium	Pressure range	Test duration
Leakage test	helium	vacuum	10 sec
Pressure test I	nitrogen	1 — 50bar	10 sec
Pressure test II	water	50 — 300 bar	10 sec

Leakage test
A vacuum is produced inside the protection tube. From the outside, helium is applied to the protection fitting. If there is a leak in the protection tube, helium will penetrate and will be recognized through analysis. A leakage rate is determined by the rise in pressure (leakage rate > 1 x 10^{-6} l/bar).

Pressure test I
A positive pressure of nitrogen is applied to the protection tube from the outside. If there is a leak in the fitting, a volume flow will be produced inside the protection tube, which will be recognized.
Pressure test II
Water pressure is applied to the protection tube from the outside. The pressure must remain constant for a certain length of time. If this is not the case, the protection fitting has a leak.

Qualified welding processes for the production of protection tubes for thermometers

In addition to using perfect materials, it is the joining technique which ultimately determines the mechanical stability and quality of the protection fittings. This is why the welding techniques at JUMO comply with the European Standards EN 287 and EN 288. Manual welding is carried out by qualified welders according to EN 287. Automatic welding processes are qualified by a WPS (welding instruction) to EN 288.

The following table gives an overview of qualified welding processes:

	WIG welding	
Material	manual	automatic
W11, W11 with W01-W04 to EN 287	Tube diameter 2 — 30mm Wall thickness 0.75 — 5.6mm	Tube diameter 5 — 10mm Wall thickness 0.5 — 1.0mm

Table 10: Qualified welding processes

Based on these experiences, our welders can also join different materials and dimensions.

Laser beam welding is employed for wall thicknesses of less than 0.6mm, which is monitored by a laser beam specialist according to guideline DSV 1187.

On customer request, material test certificates can be issued at extra cost. Likewise, special tests and treatments can be carried out, which are calculated according to the extent of the work, as set out in various application guidelines. This includes X-ray examinations, crack test (dye penetration test), thermal treatment, special cleaning processes and markings.

JUMO GmbH & Co. KG
Delivery address: Mackenrodtstraße 14, 36039 Fulda, Germany
Postal address: 36035 Fulda, Germany
Phone: +49 661 6003-0
Fax: +49 661 6003-607
E-mail: mail@jumo.net
Internet: www.jumo.net

JUMO Instrument Co. Ltd.
JUMO House
Temple Bank, Riverway
Harlow - Essex CM20 2DY, UK
Phone: +44 1279 63 55 33
Fax: +44 1279 63 52 62
E-mail: sales@jumo.co.uk
Internet: www.jumo.co.uk

JUMO Process Control, Inc.
8 Technology Boulevard
Canastota, NY 13032, USA
Phone: 315-697-JUMO
1-800-554-JUMO
Fax: 315-697-5867
E-mail: info@jumo.us
Internet: www.jumo.us

Voltage table for thermocouples to EN 60 584

im mV for 10°C temperature steps (0°C cold junction)

Pt13Rh-Pt R

°C	0	10	20	30	40	50	60	70	80	90
0	0	0.054	0.111	0.171	0.232	0.296	0.363	0.431	0.501	0.573
100	0.647	0.723	0.800	0.879	0.959	1.041	1.124	1.208	1.294	1.380
200	1.468	1.557	1.647	1.738	1.830	1.923	2.017	2.111	2.207	2.303
300	2.400	2.498	2.596	2.695	2.795	2.896	2.997	3.099	3.201	3.304
400	3.407	3.511	3.616	3.721	3.826	3.933	4.039	4.146	4.254	4.362
500	4.471	4.580	4.689	4.799	4.910	5.021	5.132	5.244	5.356	5.469
600	5.582	5.696	5.810	5.925	6.040	6.155	6.272	6.388	6.505	6.623
700	6.741	6.860	6.979	7.098	7.218	7.339	7.460	7.582	7.703	7.826
800	7.949	8.072	8.196	8.320	8.445	8.570	8.696	8.822	8.949	9.076
900	9.203	9.331	9.460	9.589	9.718	9.848	9.978	10.109	10.240	10.371
1000	10.503	10.636	10.768	10.902	11.035	11.170	11.304	11.439	11.574	11.710
1100	11.846	11.983	12.119	12.257	12.394	12.532	12.669	12.808	12.946	13.085
1200	13.224	13.363	13.502	13.642	13.782	13.922	14.062	14.202	14.343	14.483
1300	14.624	14.765	14.906	15.047	15.188	15.329	15.470	15.611	15.752	15.893
1400	16.035	16.176	16.317	16.458	16.599	16.741	16.882	17.022	17.163	17.304
1500	17.445	17.585	17.726	17.866	18.006	18.146	18.286	18.425	18.564	18.703
1600	18.842	18.981	19.119	19.257	19.395	19.533	19.670	19.807	19.944	20.080

Pt10Rh-Pt S

°C	0	10	20	30	40	50	60	70	80	90
0	0	0.055	0.113	0.173	0.235	0.299	0.365	0.432	0.502	0.573
100	0.645	0.719	0.795	0.872	0.950	1.029	1.109	1.190	1.273	1.356
200	1.440	1.525	1.611	1.698	1.785	1.873	1.962	2.051	2.141	2.232
300	2.323	2.414	2.506	2.599	2.692	2.786	2.880	2.974	3.069	3.164
400	3.260	3.356	3.452	3.549	3.645	3.743	3.840	3.938	4.036	4.135
500	4.234	4.333	4.432	4.532	4.632	4.732	4.832	4.933	5.034	5.136
600	5.237	5.339	5.442	5.544	5.648	5.751	5.855	5.960	6.064	6.169
700	6.274	6.380	6.486	6.592	6.699	6.805	6.913	7.020	7.128	7.236
800	7.345	7.454	7.563	7.672	7.782	7.892	8.003	8.114	8.225	8.336
900	8.448	8.560	8.673	8.786	8.899	9.012	9.126	9.240	9.355	9.470
1000	9.585	9.700	9.816	9.932	10.048	10.165	10.282	10.400	10.517	10.635
1100	10.754	10.872	10.991	11.110	11.229	11.348	11.467	11.587	11.707	11.827
1200	11.947	12.067	12.188	12.308	12.429	12.550	12.671	12.792	12.913	13.034
1300	13.155	13.276	13.397	13.519	13.640	13.761	13.883	14.004	14.125	14.247
1400	14.368	14.489	14.610	14.731	14.852	14.973	15.094	15.215	15.336	15.456
1500	15.576	15.697	15.817	15.937	16.057	16.176	16.296	16.415	16.534	16.653
1600	16.771	16.890	17.008	17.125	17.243	17.360	17.477	17.594	17.711	17.826

Pt30Rh-Pt6Rh B

°C	0	10	20	30	40	50	60	70	80	90
0	0	-0.002	-0.003	-0.002	-0	0.002	0.006	0.011	0.017	0.025
100	0.033	0.043	0.053	0.065	0.078	0.092	0.107	0.123	0.140	0.159
200	0.178	0.199	0.220	0.243	0.266	0.291	0.317	0.344	0.372	0.401
300	0.431	0.462	0.494	0.527	0.561	0.596	0.632	0.669	0.707	0.746
400	0.786	0.827	0.870	0.913	0.957	1.002	1.048	1.095	1.143	1.192
500	1.241	1.292	1.344	1.397	1.450	1.505	1.560	1.617	1.674	1.732
600	1.791	1.851	1.912	1.974	2.036	2.100	2.164	2.230	2.296	2.363
700	2.430	2.499	2.569	2.639	2.710	2.782	2.855	2.928	3.003	3.078
800	3.154	3.231	3.308	3.387	3.466	3.546	3.626	3.708	3.790	3.873
900	3.957	4.041	4.126	4.212	4.298	4.386	4.474	4.562	4.652	4.742
1000	4.833	4.924	5.016	5.109	5.202	5.297	5.391	5.487	5.583	5.680
1100	5.777	5.875	5.973	6.073	6.172	6.273	6.374	6.475	6.577	6.680
1200	6.783	6.887	6.991	7.096	7.202	7.308	7.414	7.521	7.628	7.736
1300	7.845	7.953	8.063	8.172	8.283	8.393	8.504	8.616	8.727	8.839
1400	8.952	9.065	9.178	9.291	9.405	9.519	9.634	9.748	9.863	9.979
1500	10.094	10.210	10.325	10.441	10.558	10.674	10.790	10.907	11.024	11.141
1600	11.257	11.374	11.491	11.608	11.725	11.842	11.959	12.076	12.193	12.310
1700	12.426	12.543	12.659	12.776	12.892	13.008	13.124	13.239	13.354	13.470

JUMO GmbH & Co. KG
Delivery address: Mackenrodtstraße 14, 36039 Fulda, Germany
Postal address: 36035 Fulda, Germany
Phone: +49 661 6003-0
Fax: +49 661 6003-607
E-mail: mail@jumo.net
Internet: www.jumo.net

JUMO Instrument Co. Ltd.
JUMO House
Temple Bank, Riverway
Harlow - Essex CM20 2DY, UK
Phone: +44 1279 63 55 33
Fax: +44 1279 63 52 62
E-mail: sales@jumo.co.uk
Internet: www.jumo.co.uk

JUMO Process Control, Inc.
8 Technology Boulevard
Canastota, NY 13032, USA
Phone: 315-697-JUMO
1-800-554-JUMO
Fax: 315-697-5867
E-mail: info@jumo.us
Internet: www.jumo.us

Voltage table for thermocouples to EN 60 584

im mV for 10°C temperature steps (0°C cold junction)

Cu-Con T

°C	0	-10	-20	-30	-40	-50	-60	-70	-80	-90
-200	-5.603	-	-	-	-	-	-	-	-	-
-100	-3.378	-3.656	-3.923	-4.177	-4.419	-4.648	-4.865	-5.069	-5.261	-5.439
0	0	-0.383	-0.757	-1.121	-1.475	-1.819	-2.152	-2.475	-2.788	-3.089

°C	0	10	20	30	40	50	60	70	80	90
0	0	0.391	0.789	1.196	1.611	2.035	2.467	2.908	3.357	3.813
100	4.277	4.749	5.227	5.712	6.204	6.702	7.207	7.718	8.235	8.757
200	9.286	9.820	10.360	10.905	11.456	12.011	12.572	13.137	13.707	14.281
300	14.860	15.443	16.030	16.621	17.217	17.816	18.420	19.027	19.638	20.252

Fe-Con J

°C	0	-10	-20	-30	-40	-50	-60	-70	-80	-90
-200	-7.890	-	-	-	-	-	-	-	-	-
-100	-4.632	-5.036	-5.426	-5.801	-6.159	-6.499	-6.821	-7.122	-7.402	-7.659
0	0	-0.501	-0.995	-1.481	-1.960	-2.431	-2.892	-3.344	-3.785	-4.215

°C	0	10	20	30	40	50	60	70	80	90
0	0	0.507	1.019	1.536	2.058	2.585	3.115	3.649	4.186	4.725
100	5.268	5.812	6.359	6.907	7.457	8.008	8.560	9.113	9.667	10.222
200	10.777	11.332	11.887	12.442	12.998	13.553	14.108	14.663	15.217	15.771
300	16.325	16.879	17.432	17.984	18.537	19.089	19.640	20.192	20.743	21.295
400	21.846	22.397	22.949	23.501	24.054	24.607	25.161	25.716	26.272	26.829
500	27.388	27.949	28.511	29.075	29.642	30.210	30.782	31.356	31.933	32.513
600	33.096	33.683	34.273	34.867	35.464	36.066	36.671	37.280	37.893	38.510
700	39.130	39.754	40.382	41.013	41.647	42.283	42.922	43.563	44.207	44.852

JUMO GmbH & Co. KG
Delivery address: Mackenrodtstraße 14, 36039 Fulda, Germany
Postal address: 36035 Fulda, Germany
Phone: +49 661 6003-0
Fax: +49 661 6003-607
E-mail: mail@jumo.net
Internet: www.jumo.net

JUMO Instrument Co. Ltd.
JUMO House
Temple Bank, Riverway
Harlow - Essex CM20 2DY, UK
Phone: +44 1279 63 55 33
Fax: +44 1279 63 52 62
E-mail: sales@jumo.co.uk
Internet: www.jumo.co.uk

JUMO Process Control, Inc.
8 Technology Boulevard
Canastota, NY 13032, USA
Phone: 315-697-JUMO
1-800-554-JUMO
Fax: 315-697-5867
E-mail: info@jumo.us
Internet: www.jumo.us

Voltage table for thermocouples to EN 60 584

im mV for 10°C temperature steps (0°C cold junction)

NiCr-Ni K

°C	0	-10	-20	-30	-40	-50	-60	-70	-80	-90
-200	-5.891	-	-	-	-	-	-	-	-	-
-100	-3.554	-3.852	-4.138	-4.411	-4.669	-4.913	-5.141	-5.354	-5.550	-5.730
0	0	-0.392	-0.778	-1.156	-1.527	-1.889	-2.243	-2.587	-2.920	-3.243

°C	0	10	20	30	40	50	60	70	80	90
0	0	0.397	0.798	1.203	1.612	2.023	2.436	2.851	3.267	3.682
100	4.096	4.509	4.920	5.328	5.735	6.138	6.540	6.941	7.340	7.739
200	8.138	8.539	8.940	9.343	9.747	10.153	10.561	10.971	11.382	11.795
300	12.209	12.624	13.040	13.457	13.874	14.293	14.713	15.133	15.554	15.975
400	16.397	16.820	17.243	17.667	18.091	18.516	18.941	19.366	19.792	20.218
500	20.644	21.071	21.497	21.924	22.350	22.776	23.203	23.629	24.055	24.480
600	24.905	25.330	25.755	26.179	26.602	27.025	27.447	27.869	28.289	28.710
700	29.129	29.548	29.965	30.382	30.798	31.213	31.628	32.041	32.453	32.865
800	33.275	33.685	34.093	34.501	34.908	35.313	35.718	36.121	36.524	36.925
900	37.326	37.725	38.124	38.522	38.918	39.314	39.708	40.101	40.494	40.885
1000	41.276	41.665	42.053	42.440	42.826	43.211	43.595	43.978	44.359	44.740
1100	45.119	45.497	45.873	46.249	46.623	46.995	47.367	47.737	48.105	48.473
1200	48.838	49.202	49.565	49.926	50.286	50.644	51.000	51.355	51.708	52.060
1300	52.410	52.759	53.106	53.451	53.795	54.138	54.479	54.819	-	-

NiCr-Con E

°C	0	-10	-20	-30	-40	-50	-60	-70	-80	-90
-200	-8.824	-9.063	-9.274	-9.455	-9.604	-9.719	-9.797	-9.835		
-100	-5.237	-5.680	-6.107	-6.516	-6.907	-7.279	-7.631	-7.963	-8.273	-8.561
0	0	-0.581	-1.151	-1.709	-2.254	-2.787	-3.306	-3.811	-4.301	-4.771

°C	0	10	20	30	40	50	60	70	80	90
0	0	0.591	1.192	1.801	2.419	3.047	3.683	4.329	4.983	5.646
100	6.317	6.996	7.683	8.377	9.078	9.787	10.501	11.222	11.949	12.681
200	13.419	14.161	14.909	15.661	16.417	17.178	17.942	18.710	19.481	20.256
300	21.033	21.814	22.597	23.383	24.171	24.961	25.754	26.549	27.345	28.143
400	28.943	29.744	30.546	31.350	32.155	32.960	33.767	34.574	35.382	36.190
500	36.999	37.808	38.617	39.426	40.236	41.045	41.853	42.662	43.470	44.278
600	45.085	45.891	46.697	47.502	48.306	49.109	49.911	50.713	51.513	52.312
700	53.110	53.907	54.703	55.498	56.291	57.083	57.873	58.663	59.451	60.237
800	61.022	61.806	62.588	63.368	64.147	64.924	65.700	66.473	67.245	68.015
900	68.783	69.549	70.313	71.075	71.835	72.593	73.350	74.104	74.857	75.608

JUMO GmbH & Co. KG
Delivery address: Mackenrodtstraße 14, 36039 Fulda, Germany
Postal address: 36035 Fulda, Germany
Phone: +49 661 6003-0
Fax: +49 661 6003-607
E-mail: mail@jumo.net
Internet: www.jumo.net

JUMO Instrument Co. Ltd.
JUMO House
Temple Bank, Riverway
Harlow - Essex CM20 2DY, UK
Phone: +44 1279 63 55 33
Fax: +44 1279 63 52 62
E-mail: sales@jumo.co.uk
Internet: www.jumo.co.uk

JUMO Process Control, Inc.
8 Technology Boulevard
Canastota, NY 13032, USA
Phone: 315-697-JUMO
1-800-554-JUMO
Fax: 315-697-5867
E-mail: info@jumo.us
Internet: www.jumo.us

Tolerance classes

for thermocouples (0°C cold junction) to EN 60 584

Thermocouple		**Class 1**
	Operating range	Tolerance (±)[1]
copper/constantan T	-40 to + 350°C	0.5°C or 0.004 x ltl
iron/constantan J	-40 to + 750°C	1.5°C or 0.004 x ltl
nickel-chrome/constantan E	-40 to + 800°C	0.5°C or 0.004 x ltl
nickel-chrome/nickel K	-40 to +1000°C	1.5°C or 0.004 x ltl
platinum-13% rhodium/platinum R	0 to +1600°C	1 °C or [1+(t-1100) x 0.003]°C
platinum-10% rhodium/platinum S	0 to +1600°C	1 °C or [1+(t-1100) x 0.003]°C
platinum-30% rhodium/platinum-6% rhodium B	-	-

Thermocouple		**Class 2**
	Operating range	Tolerance (±)[1]
copper/constantan T	-40 to + 350°C	1 °C or 0.0075 x ltl
iron/constantan J	-40 to + 750°C	2.5°C or 0.0075 x ltl
nickel-chrome/constantan E	-40 to + 900°C	1 °C or 0.0075 x ltl
nickel-chrome/nickel K	-40 to +1200°C	2.5°C or 0.0075 x ltl
platinum-13% rhodium/platinum R	0 to +1600°C	1.5°C or 0.0025 x t
platinum-10% rhodium/platinum S	0 to +1600°C	1.5°C or 0.0025 x t
platinum-30% rhodium/platinum-6% rhodium B	+600 to +1700°C	1.5°C or 0.0025 x t

Thermocouple		**Class 3[2]**
	Operating range	Tolerance (±)[1]
copper/constantan T	-200 to +40°C	1 °C or 0.015 x ltl
iron/constantan J	-200 to +40°C	2.5°C or 0.015 x ltl
nickel-chrome/constantan E	-200 to +40°C	1 °C or 0.015 x ltl
nickel-chrome/nickel K	-200 to +40°C	2.5°C or 0.015 x ltl
platinum-13% rhodium/platinum R	-	-
platinum-10% rhodium/platinum S	-	-
platinum-30% rhodium/platinum-6% rhodium B	+600 to +1700°C	4 °C or 0.005 x t

The standard tolerance for thermocouples corresponds to DIN 43 760 or EN 60 584, Class 2.
Restricted tolerance to Class 1 is possible on mineral-insulated thermocouples.

1. The tolerance is the specified value in °C or the percentage based on the actual temperature in °C, whichever is larger.
2. Thermocouples and thermocouple wires are usually supplied conforming to the tolerances according to the table above for the temperature range above -40°C.
   At temperatures below -40°C, the deviations for thermocouples of the same material may exceed the tolerances for Class 3.
   Where thermocouples according to tolerance classes 1, 2 and/or 3 are required, this has to be specified by the user; specially selected material is then used.

JUMO GmbH & Co. KG
Delivery address: Mackenrodtstraße 14, 36039 Fulda, Germany
Postal address: 36035 Fulda, Germany
Phone: +49 661 6003-0
Fax: +49 661 6003-607
E-mail: mail@jumo.net
Internet: www.jumo.net

JUMO Instrument Co. Ltd.
JUMO House
Temple Bank, Riverway
Harlow - Essex CM20 2DY, UK
Phone: +44 1279 63 55 33
Fax: +44 1279 63 52 62
E-mail: sales@jumo.co.uk
Internet: www.jumo.co.uk

JUMO Process Control, Inc.
8 Technology Boulevard
Canastota, NY 13032, USA
Phone: 315-697-JUMO
1-800-554-JUMO
Fax: 315-697-5867
E-mail: info@jumo.us
Internet: www.jumo.us

Voltage table to DIN 43 710

im mV for 10°C temperature steps (0°C cold junction)

Cu-Con U

°C	0	-10	-20	-30	-40	-50	-60	-70	-80	-90
-200	-5.70	-	-	-	-	-	-	-	-	-
-100	-3.40	-3.68	-3.95	-4.21	-4.46	-4.69	-4.91	-5.12	-5.32	-5.51
0	0	-0.39	-0.77	-1.14	-1.50	-1.85	-2.18	-2.50	-2.81	-3.11

°C	0	10	20	30	40	50	60	70	80	90
0	0	0.40	0.80	1.21	1.63	2.05	2.48	2.91	3.35	3.80
100	4.25	4.71	5.18	5.65	6.13	6.62	7.12	7.63	8.15	8.67
200	9.20	9.74	10.29	10.85	11.41	11.98	12.55	13.13	13.71	14.30
300	14.90	15.50	16.10	16.70	17.31	17.92	18.53	19.14	19.76	20.38
400	21.00	21.62	22.25	22.88	23.51	24.15	24.79	25.44	26.09	26.75
500	27.41	28.08	28.75	29.43	30.11	30.80	31.49	32.19	32.89	33.60

Fe-Con L

°C	0	-10	-20	-30	-40	-50	-60	-70	-80	-90
-200	-8.15	-	-	-	-	-	-	-	-	-
-100	-4.75	-5.15	-5.53	-5.90	-6.26	-6.60	-6.93	-7.25	-7.56	-7.86
0	0	-0.51	-1.02	-1.53	-2.03	-2.51	-2.98	-3.44	-3.89	-4.33

°C	0	10	20	30	40	50	60	70	80	90
0	0	0.52	1.05	1.58	2.11	2.65	3.19	3.73	4.27	4.82
100	5.37	5.92	6.47	7.03	7.59	8.15	8.71	9.27	9.83	10.39
200	10.95	11.51	12.07	12.63	13.19	13.75	14.31	14.88	15.44	16.00
300	16.56	17.12	17.68	18.24	18.80	19.36	19.92	20.48	21.04	21.60
400	22.16	22.72	23.29	23.86	24.43	25.00	25.57	26.14	26.71	27.28
500	27.85	28.43	29.01	29.59	30.17	30.75	31.33	31.91	32.49	33.08
600	33.67	34.26	34.85	35.44	36.04	36.64	37.25	37.85	38.47	39.09
700	39.72	40.35	40.98	41.62	42.27	42.92	43.57	44.23	44.89	45.55
800	46.22	46.89	47.57	48.25	48.94	49.63	50.32	51.02	51.72	52. 43

JUMO GmbH & Co. KG
Delivery address: Mackenrodtstraße 14, 36039 Fulda, Germany
Postal address: 36035 Fulda, Germany
Phone: +49 661 6003-0
Fax: +49 661 6003-607
E-mail: mail@jumo.net
Internet: www.jumo.net

JUMO Instrument Co. Ltd.
JUMO House
Temple Bank, Riverway
Harlow - Essex CM20 2DY, UK
Phone: +44 1279 63 55 33
Fax: +44 1279 63 52 62
E-mail: sales@jumo.co.uk
Internet: www.jumo.co.uk

JUMO Process Control, Inc.
8 Technology Boulevard
Canastota, NY 13032, USA
Phone: 315-697-JUMO
1-800-554-JUMO
Fax: 315-697-5867
E-mail: info@jumo.us
Internet: www.jumo.us

Electrical Temperature Measurement

with thermocouples and resistance thermometers

Matthias Nau

Electrical temperature sensors have become indispensable in automation and domestic engineering, as well as in production technology. As a result of the rapid expansion of automation in recent years, they have become firmly established in industrial engineering.

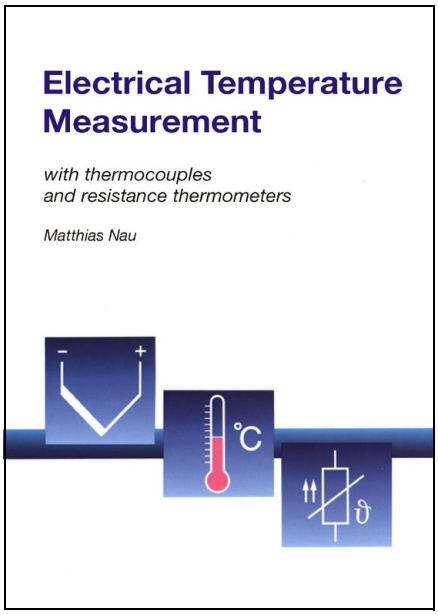

Fig. 13: Publication
Electrical temperature measurement with thermocouples and resistance thermometers

It is therefore particularly important that the user can select the product that best fits his application from the large variety of for available products for electrical temperature measuremen.

166 pages this publication covers the theoretical fundamentals of electrical temperature measurement, the practical construction of temperature sensors, their standardization, tolerances and styles.

In addition, it describes in detail the different fittings for electrical thermometers, their classification to DIN and the great variety of applications. The book includes an extensive section with tables for voltage and resistance series to DIN and EN, thus making it a valuable guide both for the experienced practical engineer and the newcomer to the field of electrical temperature measurement.
You can order a copy under
Sales No. 90/00085081,
or download it from www.jumo.net

Because of the high handling costs, schools, institutes and universities are asked to place a bulk order.

Error Analysis of a Temperature Measurement System

with worked examples

Gerd Scheller

This 40-page publication helps in the evaluation of measurement uncertainty, particularly through the worked examples in Chapter 3. Where problems arise, we are glad to discuss specific problems with our customers, and to provide practical advice.

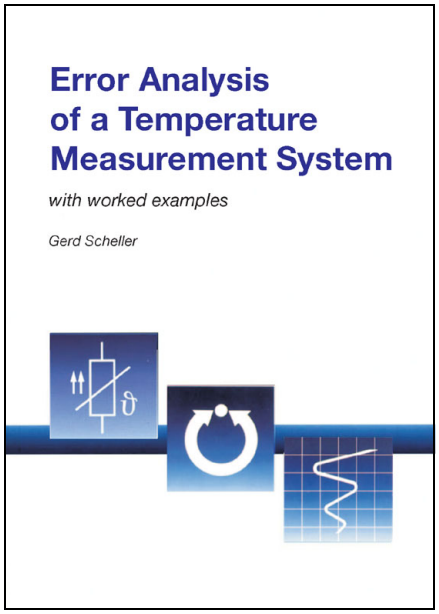

Fig. 14: Publication
Error analysis of a temperature measurement system, with worked examples

In order to be able to make comparable measurements, their quality must be established through details of the measurement uncertainty. The ISO/BIPM “Guide to the Expression of Uncertainty in Measurement”, published in 1993 and usually referred to as GUM, introduced a standardized method for the determination and definition of measurement uncertainty. This method was adopted by calibration laboratories around the world. However, the application requires a certain level of mathematical understanding.

Further chapters present the topic of measurement uncertainty in a simplified and easily understandable fashion for all users of temperature measurement systems.
Errors in the installation of the temperature sensors and the connections to the evaluation electronics lead to increased errors in measurement. To these must be added the measurement uncertainty components of the sensor and of the evaluation electronics itself. The explanation of the various components of measurement uncertainty is followed by some worked examples.
Knowledge of the various measurement uncertainty components and their magnitudes enable the user to reduce individual components through the selection of equipment or altered installation conditions. The decisive factor is always, which level of measurement uncertainty is acceptable for a specific measurement task. For instance, if a standard specifies tolerance limits for the deviation of a temperature from a nominal value, then the measurement uncertainty of the method used for temperature measurement should not be larger than 1/3 of the tolerance.

You can order a copy under
Sales No. 90/00415704
or download from www.jumo.net

Because of the high handling costs, schools, institutes and universities are asked to place a bulk order.

JUMO GmbH & Co. KG
Delivery address: Mackenrodtstraße 14, 36039 Fulda, Germany
Postal address: 36035 Fulda, Germany
Phone: +49 661 6003-0
Fax: +49 661 6003-607
E-mail: mail@jumo.net
Internet: www.jumo.net

JUMO Instrument Co. Ltd.
JUMO House
Temple Bank, Riverway
Harlow - Essex CM20 2DY, UK
Phone: +44 1279 63 55 33
Fax: +44 1279 63 52 62
E-mail: sales@jumo.co.uk
Internet: www.jumo.co.uk

JUMO Process Control, Inc.
8 Technology Boulevard
Canastota, NY 13032, USA
Phone: 315-697-JUMO
1-800-554-JUMO
Fax: 315-697-5867
E-mail: info@jumo.us
Internet: www.jumo.us

German Calibration Service (DKD) at JUCHHEIM

Certification laboratory for temperature

Raised quality expectations, improved measurement technology and, of course, quality assurance systems, such as ISO 9000, make increasing demands on the documentation of processes and the monitoring of measuring devices.
In addition, there are increasing calls from customers for high product quality standards. Particularly stringent demands arise from ISO 9000 and EN 45 000, whereby measurements must be traceable to national or international standards. This provides the legal basis for obliging suppliers and manufacturers (of products that are subject to processes where temperature is relevant) to check all testing devices, which can affect the product quality, before use or at certain intervals. Generally, this is done by calibrating or adjusting using certified devices. Because of the high demand for calibrated instruments and the large number of instruments to be calibrated, the state laboratories have insufficient capacity. The industry has therefore established and also supports special calibration laboratories which are linked to the German Calibration Service (DKD) and are subordinate to the PTB (Physikalisch-Technische-Bundesanstalt) for all aspects of instrumentation.

The certification laboratory of the German Calibration Service at JUMO has carried out calibration certification for temperature since 1992. This service provides fast and economical certification for everyone.
DKD calibration certificates can be issued for resistance thermometers, thermocouples, measurement sets, data loggers and temperature block calibrators within the range -80 to +1100°C. The traceability of the reference standard is the central issue here. All DKD calibration certificates are recognized as documents of traceability, without any further specifications. The DKD calibration laboratory at JUMO has the identification DKD-K-09501-04 and is accredited to DIN EN ISO/IEC 17 025.

JUMO GmbH & Co. KG
Delivery address: Mackenrodtstraße 14
36039 Fulda, Germany
Postal address: 36035 Fulda, Germany
Phone: +49 661 6003-0
Fax: +49 661 6003-607
E-mail: mail@jumo.net
Internet: www.jumo.net

JUMO Instrument Co. Ltd.
JUMO House
Temple Bank, Riverway
Harlow, Essex CM20 2DY, UK
Phone: +44 1279 635533
Fax: +44 1279 635262
E-mail: sales@jumo.co.uk
Internet: www.jumo.co.uk

JUMO Process Control, Inc.
6733 Myers Road
East Syracuse, NY 13057, USA
Phone: 315-437-5866
1-800-554-5866
Fax: 315-437-5860
E-mail: info.us@jumo.net
Internet: www.jumousa.com

Thermocouples for Devices and Plants Inspected/ Tested According to DIN EN 14597

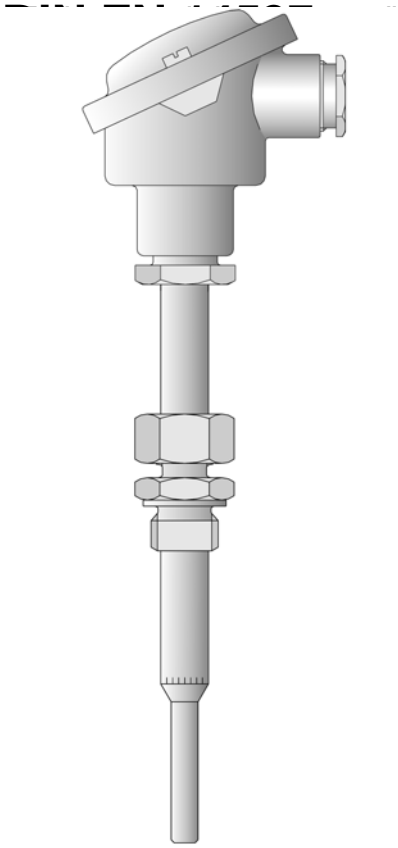

- **For heat transmission plants according to DIN 4754**
- **For temperatures of up to 1500 °C**
- **As single or double thermocouples**
- **For water, oil, or air**
- **For tested control and limitation devices**

The thermocouples specified in this data sheet can be used in connection with temperature control and limitation devices tested/inspected according to DIN EN 14597 (DIN 3440) in heat transmission systems according to DIN 4754.

Thermocouples are the preferred choice for measuring temperatures in liquids and gases. Application areas include heating, furnace/kiln, and apparatus engineering.

Form B terminal heads are suitable for ambient temperatures up to 100 °C.

Protection tubes made of various materials protect the measuring insert against chemical influences and mechanical damage. The appropriate protection tube material is selected according to the conditions on site.

Thermocouples according to DIN EN 60584, class 2 and DIN 43710 are used as the measuring insert.

Changes to the described versions require new design approval.

Important information: state the part no. from price sheet 901006 when ordering!

JUMO GmbH & Co. KG
Delivery address: Mackenrodtstraße 14
36039 Fulda, Germany
Postal address: 36035 Fulda, Germany
Phone: +49 661 6003-0
Fax: +49 661 6003-607
E-mail: mail@jumo.net
Internet: www.jumo.net

JUMO Instrument Co. Ltd.
JUMO House
Temple Bank, Riverway
Harlow, Essex CM20 2DY, UK
Phone: +44 1279 635533
Fax: +44 1279 635262
E-mail: sales@jumo.co.uk
Internet: www.jumo.co.uk

JUMO Process Control, Inc.
6733 Myers Road
East Syracuse, NY 13057, USA
Phone: 315-437-5866
1-800-554-5866
Fax: 315-437-5860
E-mail: info.us@jumo.net
Internet: www.jumousa.com

Dimensions

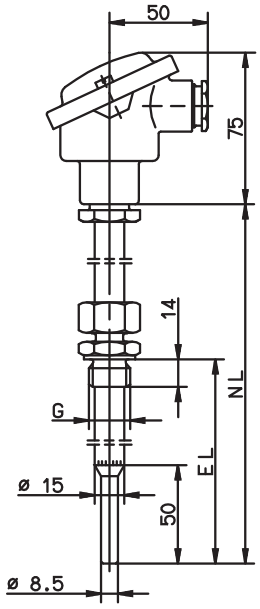

Pos. 1

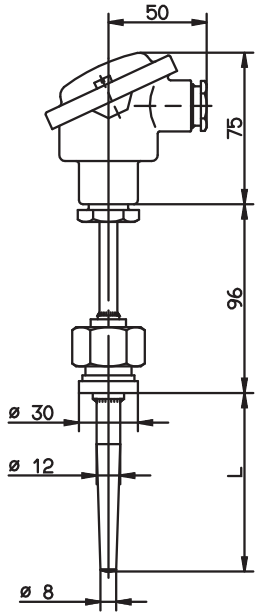

Pos. 2

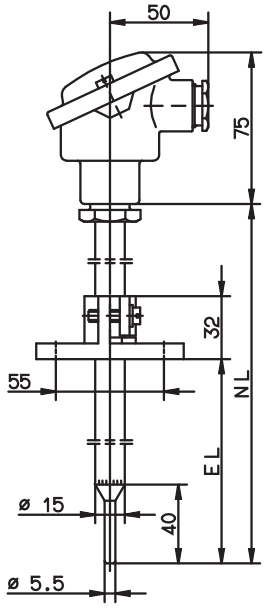

Pos. 3

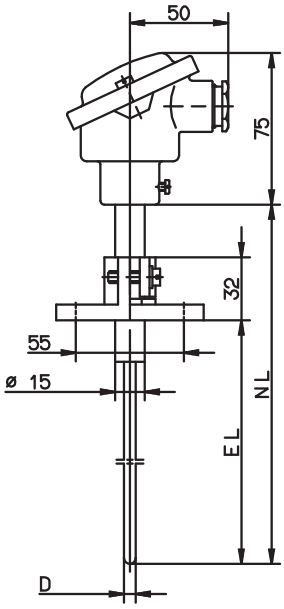

Pos. 4

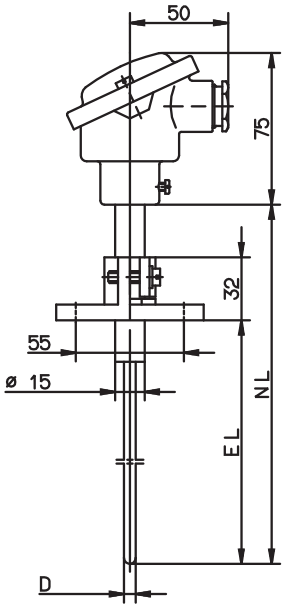

Pos. 5

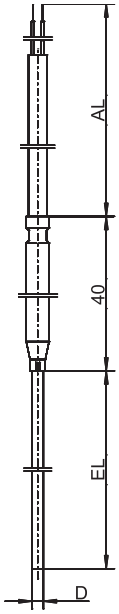

Pos. 6

JUMO GmbH & Co. KG
Delivery address: Mackenrodtstraße 14
36039 Fulda, Germany
Postal address: 36035 Fulda, Germany
Phone: +49 661 6003-0
Fax: +49 661 6003-607
E-mail: mail@jumo.net
Internet: www.jumo.net

JUMO Instrument Co. Ltd.
JUMO House
Temple Bank, Riverway
Harlow, Essex CM20 2DY, UK
Phone: +44 1279 635533
Fax: +44 1279 635262
E-mail: sales@jumo.co.uk
Internet: www.jumo.co.uk

JUMO Process Control, Inc.
6733 Myers Road
East Syracuse, NY 13057, USA
Phone: 315-437-5866
1-800-554-5866
Fax: 315-437-5860
E-mail: info.us@jumo.net
Internet: www.jumousa.com

Screw-in thermocouples with pipe screw connection and terminal head according to DIN 43729, form B M24 × 1.5

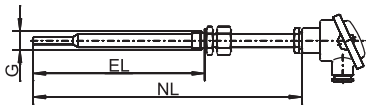

Insertion length EL in mm	Nominal length NL in mm	Thread G in inches	Temperature range in °C	Type up to February 28, 2013 1 couple	Type up to February 28, 2013 2 couples	Type as of March 01, 2013 Order code
Stainless steel protection tube X 6 CrNiMoTi 17 12 2, material-no. 1.4571						
Thermocouple NiCr-Ni "K"						
65 to 670	710	G 1/2	-35 to +550	90.020-F03	-	901006/54-544-1043-15-710-254/000
65 to 670	710	G 1/2	-35 to +550	-	90.020-F02	901006/54-544-2043-15-710-254/000
Thermocouple Fe-CuNi "L"						
65 to 670	710	G 1/2	-35 to +550	90.020-F13	-	901006/54-544-1042-15-710-254/000
65 to 670	710	G 1/2	-35 to +550	-	90.020-F12	901006/54-544-2042-15-710-254/000

Operating media: water and oil
Operating pressure: max. 27 bar up to 100 °C, 20 bar up to 400 °C, pressureless as of 400 °C — Pos. 1

Versions only for connecting a
JUMO safetyM STB/STW Ex type 701155

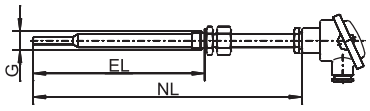

Insertion length EL in mm	Nominal length NL in mm	Thread G in inches	Temperature range in °C	1 couple	2 couples	Type Order code
Stainless steel protection tube X 6 CrNiMoTi 17 12 2, material-no. 1.4571						
Thermocouple NiCr-Ni "K"						
65 to 670	710	G 1/2	-35 to +550	x	-	901006/54-544-1043-15-710-254/922
65 to 670	710	G 1/2	-35 to +550	-	x	901006/54-544-2043-15-710-254/922
Thermocouple Fe-CuNi "L"						
65 to 670	710	G 1/2	-35 to +550	x	-	901006/54-544-1042-15-710-254/922
65 to 670	710	G 1/2	-35 to +550	-	x	901006/54-544-2042-15-710-254/922

Operating media: water and oil
Operating pressure: max. 27 bar up to 100 °C, 20 bar up to 400 °C, pressureless as of 400 °C — Pos. 1

JUMO GmbH & Co. KG
Delivery address: Mackenrodtstraße 14
36039 Fulda, Germany
Postal address: 36035 Fulda, Germany
Phone: +49 661 6003-0
Fax: +49 661 6003-607
E-mail: mail@jumo.net
Internet: www.jumo.net

JUMO Instrument Co. Ltd.
JUMO House
Temple Bank, Riverway
Harlow, Essex CM20 2DY, UK
Phone: +44 1279 635533
Fax: +44 1279 635262
E-mail: sales@jumo.co.uk
Internet: www.jumo.co.uk

JUMO Process Control, Inc.
6733 Myers Road
East Syracuse, NY 13057, USA
Phone: 315-437-5866
1-800-554-5866
Fax: 315-437-5860
E-mail: info.us@jumo.net
Internet: www.jumousa.com

Screw-in thermocouples with weld-in sleeve and terminal head according to DIN 43729, form B M24 × 1.5

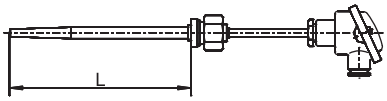

Insertion length[a] EL in mm	Length L in mm	Temperature range in °C	Type up to February 28, 2013 1 couple	Type up to February 28, 2013 2 couples	Type as of March 01, 2013 Order code
Steel welding shoulder 15 Mo 3, material-no. 1.5415 Steel protection tube St 35.8, material-no. 1.0305					
Thermocouple Fe-CuNi "L"					
220	200	-35 to +480	90.111-F01	-	901006/53-543-1042-12-220-815/000
220	200	-35 to +480	-	90.111-F02 ●	901006/53-543-2042-12-220-815/000 ●

Operating media: water and oil
Operating pressure: max. 103 bar up to 100 °C, 30 bar up to 480 °C

● Available from stock.

Pos. 2

[a] Insertion length of the thermocouple

Versions only for connecting a
JUMO safetyM STB/STW Ex type 701155

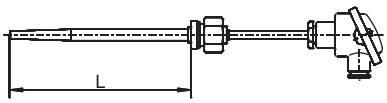

Insertion length[a] EL in mm	Length L in mm	Temperature range in °C	1 couple	2 couples	Type Order code
Steel welding shoulder 15 Mo 3, material-no. 1.5415 Steel protection tube St 35.8, material-no. 1.0305					
Thermocouple Fe-CuNi "L"					
220	200	-35 to +480	x	-	901006/53-543-1042-12-220-815/922
220	200	-35 to +480	-	x	901006/53-543-2042-12-220-815/922

Operating media: water and oil
Operating pressure: max. 103 bar up to 100 °C, 30 bar up to 480 °C

Pos. 2

[a] Insertion length of the thermocouple

JUMO GmbH & Co. KG
Delivery address: Mackenrodtstraße 14
36039 Fulda, Germany
Postal address: 36035 Fulda, Germany
Phone: +49 661 6003-0
Fax: +49 661 6003-607
E-mail: mail@jumo.net
Internet: www.jumo.net

JUMO Instrument Co. Ltd.
JUMO House
Temple Bank, Riverway
Harlow, Essex CM20 2DY, UK
Phone: +44 1279 635533
Fax: +44 1279 635262
E-mail: sales@jumo.co.uk
Internet: www.jumo.co.uk

JUMO Process Control, Inc.
6733 Myers Road
East Syracuse, NY 13057, USA
Phone: 315-437-5866
1-800-554-5866
Fax: 315-437-5860
E-mail: info.us@jumo.net
Internet: www.jumousa.com

Push-in thermocouple with displaceable stop flange and terminal head according to DIN 43729, form B M24 × 1.5

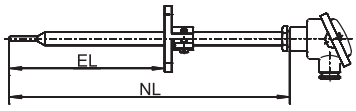

Insertion length EL in mm	Nominal length NL in mm	Temperature range in °C	Type up to February 28, 2013 1 couple	Type up to February 28, 2013 2 couples	Type as of March 01, 2013 Order code
Stainless steel protection tube X 6 CrNiMoTi 17 12 2, material-no. 1.4571					
Thermocouple NiCr-Ni "K"					
50 to 460	500	-35 to +800	-	90.019-F01 ●	901006/65-547-2043-15-500-668/000 ●
50 to 670	710	-35 to +800	-	90.020-F01 ●	901006/65-547-2043-15-710-668/000 ●
50 to 960	1000	-35 to +800	-	90.021-F01	901006/65-547-2043-15-1000-668/000
Thermocouple Fe-CuNi "L"					
50 to 460	500	-35 to +700	-	90.019-F11	901006/65-546-2042-15-500-668/000
50 to 670	710	-35 to +700	-	90.020-F11	901006/65-546-2042-15-710-668/000
50 to 960	1000	-35 to +700	-	90.021-F11	901006/65-546-2042-15-1000-668/000

Operating medium: air

● Available from stock.

Pos. 3

Versions only for connecting a
JUMO safetyM STB/STW Ex type 701155

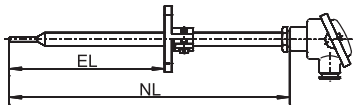

Insertion length EL in mm	Nominal length NL in mm	Temperature range in °C	1 couple	2 couples	Type Order code
Stainless steel protection tube X 6 CrNiMoTi 17 12 2, material-no. 1.4571					
Thermocouple NiCr-Ni "K"					
50 to 460	500	-35 to +800	-	x	901006/65-547-2043-15-500-668/922
50 to 670	710	-35 to +800	-	x	901006/65-547-2043-15-710-668/922
50 to 960	1000	-35 to +800	-	x	901006/65-547-2043-15-1000-668/922
Thermocouple Fe-CuNi "L"					
50 to 460	500	-35 to +700	-	x	901006/65-546-2042-15-500-668/922
50 to 670	710	-35 to +700	-	x	901006/65-546-2042-15-710-668/922
50 to 960	1000	-35 to +700	-	x	901006/65-546-2042-15-1000-668/922

Operating medium: air

Pos. 3

JUMO GmbH & Co. KG
Delivery address: Mackenrodtstraße 14
36039 Fulda, Germany
Postal address: 36035 Fulda, Germany
Phone: +49 661 6003-0
Fax: +49 661 6003-607
E-mail: mail@jumo.net
Internet: www.jumo.net

JUMO Instrument Co. Ltd.
JUMO House
Temple Bank, Riverway
Harlow, Essex CM20 2DY, UK
Phone: +44 1279 635533
Fax: +44 1279 635262
E-mail: sales@jumo.co.uk
Internet: www.jumo.co.uk

JUMO Process Control, Inc.
6733 Myers Road
East Syracuse, NY 13057, USA
Phone: 315-437-5866
1-800-554-5866
Fax: 315-437-5860
E-mail: info.us@jumo.net
Internet: www.jumousa.com

Push-in thermocouple with displaceable stop flange and terminal head according to DIN 43729, form B 15

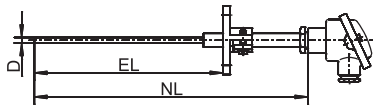

Insertion length EL in mm	Nominal length NL in mm	Diameter D in mm	Temperature range in °C	Type up to February 28, 2013 1 couple	Type up to February 28, 2013 2 couples	Type as of March 01, 2013 Order code
Ceramic protection tube KER 710						
Thermocouple NiCr-Ni "K"						
420 to 475	500	6	-35 to +1000	-	90.023-F01 ●	901006/66-550-2043-6-500-668/000 ●
275 to 320	355	6	-35 to +1000	-	90.023-F02	901006/66-550-2043-6-355-668/000
170 to 215	250	6	-35 to +1000	-	90.023-F03	901006/66-550-2043-6-250-668/000

Operating medium: air

● Available from stock.

Pos. 4

Versions only for connecting a
JUMO safetyM STB/STW Ex type 701155

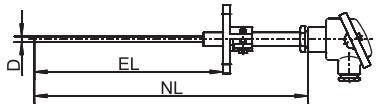

Insertion length EL in mm	Nominal length NL in mm	Diameter D in mm	Temperature range in °C	1 couple	2 couples	Type Order code
Ceramic protection tube KER 710						
Thermocouple NiCr-Ni "K"						
420 to 475	500	6	-35 to +1000	-	x	901006/66-550-2043-6-500-668/922
275 to 320	355	6	-35 to +1000	-	x	901006/66-550-2043-6-355-668/922
170 to 215	250	6	-35 to +1000	-	x	901006/66-550-2043-6-250-668/922

Operating medium: air

Pos. 4

JUMO GmbH & Co. KG
Delivery address: Mackenrodtstraße 14
36039 Fulda, Germany
Postal address: 36035 Fulda, Germany
Phone: +49 661 6003-0
Fax: +49 661 6003-607
E-mail: mail@jumo.net
Internet: www.jumo.net

JUMO Instrument Co. Ltd.
JUMO House
Temple Bank, Riverway
Harlow, Essex CM20 2DY, UK
Phone: +44 1279 635533
Fax: +44 1279 635262
E-mail: sales@jumo.co.uk
Internet: www.jumo.co.uk

JUMO Process Control, Inc.
6733 Myers Road
East Syracuse, NY 13057, USA
Phone: 315-437-5866
1-800-554-5866
Fax: 315-437-5860
E-mail: info.us@jumo.net
Internet: www.jumousa.com

Push-in thermocouple with displaceable stop flange and terminal head according to DIN 43729, form B 15

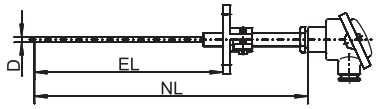

Insertion length EL in mm	Nominal length NL in mm	Diameter D in mm	Temperature range in °C	Type up to February 28, 2013 1 couple	Type up to February 28, 2013 2 couples	Type as of March 01, 2013 Order code
Ceramic protection tube KER 710						
Thermocouple Pt10Rh-Pt "S"						
170 to 215	250	6	0 to 1300	90.021	-	901006/66-880-1044-6-250-668/000
275 to 320	355	6	0 to 1300	90.022	-	901006/66-880-1044-6-355-668/000
420 to 465	500	6	0 to 1300	90.023	-	901006/66-880-1044-6-500-668/000
170 to 215	250	6	0 to 1300	-	90 D 021	901006/66-880-2044-6-250-668/000
275 to 320	355	6	0 to 1300	-	90 D 022	901006/66-880-2044-6-355-668/000
420 to 465	500	6	0 to 1300	-	90 D 023	901006/66-880-2044-6-500-668/000
Thermocouple Pt30Rh-Pt6Rh "B"						
170 to 215	250	6	600 to 1500	90.027	-	901006/66-953-1046-6-250-668/000
275 to 320	355	6	600 to 1500	90.028	-	901006/66-953-1046-6-355-668/000
420 to 465	500	6	600 to 1500	90.029	-	901006/66-953-1046-6-500-668/000
170 to 215	250	6	600 to 1500	-	90 D 027	901006/66-953-2046-6-250-668/000
275 to 320	355	6	600 to 1500	-	90 D 028	901006/66-953-2046-6-355-668/000
420 to 465	500	6	600 to 1500	-	90 D 029	901006/66-953-2046-6-500-668/000

Operating medium: air

Pos. 5

Versions only for connecting a
JUMO safetyM STB/STW Ex type 701155

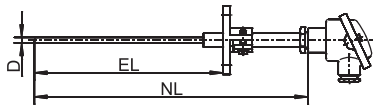

Insertion length EL in mm	Nominal length NL in mm	Diameter D in mm	Temperature range in °C	1 couple	2 couples	Type Order code
Ceramic protection tube KER 710						
Thermocouple Pt10Rh-Pt "S"						
170 to 215	250	6	0 to 1300	x	-	901006/66-880-1044-6-250-668/922
275 to 320	355	6	0 to 1300	x	-	901006/66-880-1044-6-355-668/922
420 to 465	500	6	0 to 1300	x	-	901006/66-880-1044-6-500-668/922
170 to 215	250	6	0 to 1300	-	x	901006/66-880-2044-6-250-668/922
275 to 320	355	6	0 to 1300	-	x	901006/66-880-2044-6-355-668/922
420 to 465	500	6	0 to 1300	-	x	901006/66-880-2044-6-500-668/922
Thermocouple Pt30Rh-Pt6Rh "B"						
170 to 215	250	6	600 to 1500	x	-	901006/66-953-1046-6-250-668/922
275 to 320	355	6	600 to 1500	x	-	901006/66-953-1046-6-355-668/922
420 to 465	500	6	600 to 1500	x	-	901006/66-953-1046-6-500-668/922
170 to 215	250	6	600 to 1500	-	x	901006/66-953-2046-6-250-668/922
275 to 320	355	6	600 to 1500	-	x	901006/66-953-2046-6-355-668/922
420 to 465	500	6	600 to 1500	-	x	901006/66-953-2046-6-500-668/922

Operating medium: air

Pos. 5

JUMO GmbH & Co. KG
Delivery address: Mackenrodtstraße 14
36039 Fulda, Germany
Postal address: 36035 Fulda, Germany
Phone: +49 661 6003-0
Fax: +49 661 6003-607
E-mail: mail@jumo.net
Internet: www.jumo.net

JUMO Instrument Co. Ltd.
JUMO House
Temple Bank, Riverway
Harlow, Essex CM20 2DY, UK
Phone: +44 1279 635533
Fax: +44 1279 635262
E-mail: sales@jumo.co.uk
Internet: www.jumo.co.uk

JUMO Process Control, Inc.
6733 Myers Road
East Syracuse, NY 13057, USA
Phone: 315-437-5866
1-800-554-5866
Fax: 315-437-5860
E-mail: info.us@jumo.net
Internet: www.jumousa.com

Push-in mineral-insulated thermocouples with compensating cable

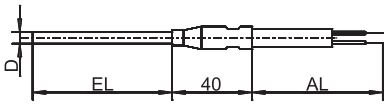

Insertion length EL in mm	Compensating cable length AL in mm	Diameter D in mm	Temperature range in °C	Type 1 couple	Type 2 couples	Type Order code
Sheath cable Inconel 600, material-no. 2.4816						
Thermocouple NiCr-Ni "K"						
100	5000	2	-35 to +1150	-	x	901006/45-551-2043-2-100-11-5000/000
200	2500	2	-35 to +1150	-	x	901006/45-551-2043-2-200-11-2500/000
250	5000	2	-35 to +1150	-	x	901006/45-551-2043-2-250-11-5000/000
1700	2500	2	-35 to +1150	-	x	901006/45-551-2043-2-1700-11-2500/000

Operating media: water and oil
Operating pressure: max. 199 bar up to 100 °C, 188 bar up to 200 °C, 176 bar up to 400 °C

Operating media: air and flue gas
Operating pressure: max. 197 bar up to 100 °C, 186 bar up to 200 °C, 175 bar up to 400 °C,
110 bar up to 650 °C, 35 bar up to 900 °C
Additional design types from EL 50 to 2000 mm and AL 1000 to 20000 mm upon request.

Pos. 6

Versions only for connecting a
JUMO safetyM STB/STW Ex type 701155

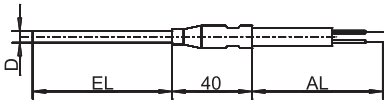

Insertion length EL in mm	Compensating cable length AL in mm	Diameter D in mm	Temperature range in °C	1 couple	2 couples	Type Order code
Sheath cable Inconel 600, material-no. 2.4816						
Thermocouple NiCr-Ni "K"						
100	5000	2	-35 to +1150	-	x	901006/45-551-2043-2-100-11-5000/922
200	2500	2	-35 to +1150	-	x	901006/45-551-2043-2-200-11-2500/922
250	5000	2	-35 to +1150	-	x	901006/45-551-2043-2-250-11-5000/922
1700	2500	2	-35 to +1150	-	x	901006/45-551-2043-2-1700-11-2500/922

Operating media: water and oil
Operating pressure: max. 199 bar up to 100 °C, 188 bar up to 200 °C, 176 bar up to 400 °C

Operating medium: air
Operating pressure: max. 197 bar up to 100 °C, 186 bar up to 200 °C, 175 bar up to 400 °C,
110 bar up to 650 °C, 35 bar up to 900 °C
Additional design types from EL 50 to 2000 mm and AL 1000 to 20000 mm upon request.

Pos. 6

JUMO GmbH & Co. KG
Delivery address: Mackenrodtstraße 14
36039 Fulda, Germany
Postal address: 36035 Fulda, Germany
Phone: +49 661 6003-0
Fax: +49 661 6003-607
E-mail: mail@jumo.net
Internet: www.jumo.net

JUMO Instrument Co. Ltd.
JUMO House
Temple Bank, Riverway
Harlow, Essex CM20 2DY, UK
Phone: +44 1279 635533
Fax: +44 1279 635262
E-mail: sales@jumo.co.uk
Internet: www.jumo.co.uk

JUMO Process Control, Inc.
6733 Myers Road
East Syracuse, NY 13057, USA
Phone: 315-437-5866
1-800-554-5866
Fax: 315-437-5860
E-mail: info.us@jumo.net
Internet: www.jumousa.com

Allocation list of temperature probes to the respective JUMO devices

For connection to...
JUMO safetyM STB/STW type 701150
The temperature probes are suitable for use according to DIN EN 14597.
Based on the test report from TÜV-Nord no. SAS-110-2006TB-2.

Temperature probes for air

Type as of March 01, 2013 Order code	Type up to February 28, 2013	Measuring probe	Temperature range in °C	Weld-in sleeve
901006/65-547-2043-15-500-668/000	90.019-F01	2× NiCr-Ni "K"	-35 to +800	-
901006/65-547-2043-15-710-668/000	90.020-F01	2× NiCr-Ni "K"	-35 to +800	-
901006/65-547-2043-15-1000-668/000	90.021-F01	2× NiCr-Ni "K"	-35 to +800	-
901006/65-546-2042-15-500-668/000	90.019-F11	2× Fe-CuNi "L"	-35 to +700	-
901006/65-546-2042-15-710-668/000	90.020-F11	2× Fe-CuNi "L"	-35 to +700	-
901006/65-546-2042-15-1000-668/000	90.021-F11	2× Fe-CuNi "L"	-35 to +700	-
901006/66-550-2043-6-500-668/000	90.023-F01	2× NiCr-Ni "K"	-35 to +1000	-
901006/66-550-2043-6-355-668/000	90.023-F02	2× NiCr-Ni "K"	-35 to +1000	-
901006/66-550-2043-6-250-668/000	90.023-F03	2× NiCr-Ni "K"	-35 to +1000	-
901006/66-880-1044-6-250-668/000	90.021	1× Pt10Rh-Pt "S"	0 to 1300	-
901006/66-880-1044-6-355-668/000	90.022	1× Pt10Rh-Pt "S"	0 to 1300	-
901006/66-880-1044-6-500-668/000	90.023	1× Pt10Rh-Pt "S"	0 to 1300	-
901006/66-880-2044-6-250-668/000	90D021	2× Pt10Rh-Pt "S"	0 to 1300	-
901006/66-880-2044-6-355-668/000	90D022	2× Pt10Rh-Pt "S"	0 to 1300	-
901006/66-880-2044-6-500-668/000	90D023	2× Pt10Rh-Pt "S"	0 to 1300	-
901006/66-953-1046-6-250-668/000	90.027	1× Pt30Rh-Pt6Rh "B"	600 to 1500	-
901006/66-953-1046-6-355-668/000	90.028	1× Pt30Rh-Pt6Rh "B"	600 to 1500	-
901006/66-953-1046-6-500-668/000	90.029	1× Pt30Rh-Pt6Rh "B"	600 to 1500	-
901006/66-953-2046-6-250-668/000	90D027	2× Pt30Rh-Pt6Rh "B"	600 to 1500	-
901006/66-953-2046-6-355-668/000	90D028	2× Pt30Rh-Pt6Rh "B"	600 to 1500	-
901006/66-953-2046-6-500-668/000	90D029	2× Pt30Rh-Pt6Rh "B"	600 to 1500	-
901006/45-551-2043-2-100-11-5000/000	-	2× NiCr-Ni "K"	-35 to +1150	-
901006/45-551-2043-2-200-11-2500/000	-	2× NiCr-Ni "K"	-35 to +1150	-
901006/45-551-2043-2-250-11-5000/000	-	2× NiCr-Ni "K"	-35 to +1150	-
901006/45-551-2043-2-1700-11-2500/000	-	2× NiCr-Ni "K"	-35 to +1150	-

Temperature probes for water and oil

Type as of March 01, 2013 Order code	Type up to February 28, 2013	Measuring probe	Temperature range in °C	Weld-in sleeve
901006/54-544-1043-15-710-254/000	90.020-F03	1× NiCr-Ni "K"	-35 to +550	-
901006/54-544-2043-15-710-254/000	90.020-F02	2× NiCr-Ni "K"	-35 to +550	-
901006/54-544-1042-15-710-254/000	90.020-F13	1× Fe-CuNi "L"	-35 to +550	-
901006/54-544-2042-15-710-254/000	90.020-F12	2× Fe-CuNi "L"	-35 to +550	-
901006/53-543-1042-12-220-815/000	90.111-F01	1× Fe-CuNi "L"	-35 to +480	x
901006/53-543-2042-12-220-815/000	90.111-F02	2× Fe-CuNi "L"	-35 to +480	x
901006/45-551-2043-2-100-11-5000/000	-	2× NiCr-Ni "K"	-35 to +1150	-
901006/45-551-2043-2-200-11-2500/000	-	2× NiCr-Ni "K"	-35 to +1150	-
901006/45-551-2043-2-250-11-5000/000	-	2× NiCr-Ni "K"	-35 to +1150	-
901006/45-551-2043-2-1700-11-2500/000	-	2× NiCr-Ni "K"	-35 to +1150	-

JUMO GmbH & Co. KG
Delivery address: Mackenrodtstraße 14
36039 Fulda, Germany
Postal address: 36035 Fulda, Germany
Phone: +49 661 6003-0
Fax: +49 661 6003-607
E-mail: mail@jumo.net
Internet: www.jumo.net

JUMO Instrument Co. Ltd.
JUMO House
Temple Bank, Riverway
Harlow, Essex CM20 2DY, UK
Phone: +44 1279 635533
Fax: +44 1279 635262
E-mail: sales@jumo.co.uk
Internet: www.jumo.co.uk

JUMO Process Control, Inc.
6733 Myers Road
East Syracuse, NY 13057, USA
Phone: 315-437-5866
1-800-554-5866
Fax: 315-437-5860
E-mail: info.us@jumo.net
Internet: www.jumousa.com

For connection to...
JUMO safetyM TB/TW type 701160
JUMO safetyM TB/TW 08 type 701170
JUMO DICON 500 type 703570
JUMO DICON 501 type 703580
The temperature probes are suitable for use according to DIN EN 14597.
Based on the test report from TÜV-Süd no. C-T 1487-00/12.

Temperature probes for air

Type as of March 01, 2013 Order code	Type up to February 28, 2013	Measuring probe	Temperature range in °C	Weld-in sleeve
901006/65-547-2043-15-500-668/000	90.019-F01	2× NiCr-Ni "K"	-35 to +800	-
901006/65-547-2043-15-710-668/000	90.020-F01	2× NiCr-Ni "K"	-35 to +800	-
901006/65-547-2043-15-1000-668/000	90.021-F01	2× NiCr-Ni "K"	-35 to +800	-
901006/65-546-2042-15-500-668/000	90.019-F11	2× Fe-CuNi "L"	-35 to +700	-
901006/65-546-2042-15-710-668/000	90.020-F11	2× Fe-CuNi "L"	-35 to +700	-
901006/65-546-2042-15-1000-668/000	90.021-F11	2× Fe-CuNi "L"	-35 to +700	-
901006/66-550-2043-6-500-668/000	90.023-F01	2× NiCr-Ni "K"	-35 to +1000	-
901006/66-550-2043-6-355-668/000	90.023-F02	2× NiCr-Ni "K"	-35 to +1000	-
901006/66-550-2043-6-250-668/000	90.023-F03	2× NiCr-Ni "K"	-35 to +1000	-
901006/66-880-1044-6-250-668/000	90.021	1× Pt10Rh-Pt "S"	0 to 1300	-
901006/66-880-1044-6-355-668/000	90.022	1× Pt10Rh-Pt "S"	0 to 1300	-
901006/66-880-1044-6-500-668/000	90.023	1× Pt10Rh-Pt "S"	0 to 1300	-
901006/66-880-2044-6-250-668/000	90D021	2× Pt10Rh-Pt "S"	0 to 1300	-
901006/66-880-2044-6-355-668/000	90D022	2× Pt10Rh-Pt "S"	0 to 1300	-
901006/66-880-2044-6-500-668/000	90D023	2× Pt10Rh-Pt "S"	0 to 1300	-
901006/66-953-1046-6-250-668/000	90.027	1× Pt30Rh-Pt6Rh "B"	600 to 1500	-
901006/66-953-1046-6-355-668/000	90.028	1× Pt30Rh-Pt6Rh "B"	600 to 1500	-
901006/66-953-1046-6-500-668/000	90.029	1× Pt30Rh-Pt6Rh "B"	600 to 1500	-
901006/66-953-2046-6-250-668/000	90D027	2× Pt30Rh-Pt6Rh "B"	600 to 1500	-
901006/66-953-2046-6-355-668/000	90D028	2× Pt30Rh-Pt6Rh "B"	600 to 1500	-
901006/66-953-2046-6-500-668/000	90D029	2× Pt30Rh-Pt6Rh "B"	600 to 1500	-
901006/45-551-2043-2-100-11-5000/000	-	2× NiCr-Ni "K"	-35 to +1150	-
901006/45-551-2043-2-200-11-2500/000	-	2× NiCr-Ni "K"	-35 to +1150	-
901006/45-551-2043-2-250-11-5000/000	-	2× NiCr-Ni "K"	-35 to +1150	-
901006/45-551-2043-2-1700-11-2500/000	-	2× NiCr-Ni "K"	-35 to +1150	-

Temperature probes for water and oil

Type as of March 01, 2013 Order code	Type up to February 28, 2013	Measuring probe	Temperature range in °C	Weld-in sleeve
901006/54-544-1043-15-710-254/000	90.020-F03	1× NiCr-Ni "K"	-35 to +550	-
901006/54-544-2043-15-710-254/000	90.020-F02	2× NiCr-Ni "K"	-35 to +550	-
901006/54-544-1042-15-710-254/000	90.020-F13	1× NiCr-Ni "K"	-35 to +550	-
901006/54-544-2042-15-710-254/000	90.020-F12	2× NiCr-Ni "K"	-35 to +550	-
901006/53-543-1042-12-220-815/000	90.111-F01	1× Fe-CuNi "L"	-35 to +480	x
901006/53-543-2042-12-220-815/000	90.111-F02	2× Fe-CuNi "L"	-35 to +480	x
901006/45-551-2043-2-100-11-5000/000	-	2× NiCr-Ni "K"	-35 to +1150	-
901006/45-551-2043-2-200-11-5000/000	-	2× NiCr-Ni "K"	-35 to +1150	-
901006/45-551-2043-2-250-11-5000/000	-	2× NiCr-Ni "K"	-35 to +1150	-
901006/45-551-2043-2-1700-11-5000/000	-	2× NiCr-Ni "K"	-35 to +1150	-

JUMO GmbH & Co. KG
Delivery address: Mackenrodtstraße 14
36039 Fulda, Germany
Postal address: 36035 Fulda, Germany
Phone: +49 661 6003-0
Fax: +49 661 6003-607
E-mail: mail@jumo.net
Internet: www.jumo.net

JUMO Instrument Co. Ltd.
JUMO House
Temple Bank, Riverway
Harlow, Essex CM20 2DY, UK
Phone: +44 1279 635533
Fax: +44 1279 635262
E-mail: sales@jumo.co.uk
Internet: www.jumo.co.uk

JUMO Process Control, Inc.
6733 Myers Road
East Syracuse, NY 13057, USA
Phone: 315-437-5866
1-800-554-5866
Fax: 315-437-5860
E-mail: info.us@jumo.net
Internet: www.jumousa.com

For connection to...
JUMO safetyM STB/STW Ex type 701155
The temperature probes are suitable for use in potentially explosive areas according to DIN EN 14597.
Based on the test report from TÜV-Nord no. 12 203 556139.

Temperature probes for air

Type as of March 01, 2013 Order code	Type up to February 28, 2013	Measuring probe	Temperature range in °C	Weld-in sleeve
901006/65-547-2043-15-500-668/922	-	2× NiCr-Ni "K"	-35 to +800	-
901006/65-547-2043-15-710-668/922	-	2× NiCr-Ni "K"	-35 to +800	-
901006/65-547-2043-15-1000-668/922	-	2× NiCr-Ni "K"	-35 to +800	-
901006/65-546-2042-15-500-668/922	-	2× Fe-CuNi "L"	-35 to +700	-
901006/65-546-2042-15-710-668/922	-	2× Fe-CuNi "L"	-35 to +700	-
901006/65-546-2042-15-1000-668/922	-	2× Fe-CuNi "L"	-35 to +700	-
901006/66-550-2043-6-500-668/922	-	2× NiCr-Ni "K"	-35 to +1000	-
901006/66-550-2043-6-355-668/922	-	2× NiCr-Ni "K"	-35 to +1000	-
901006/66-550-2043-6-250-668/922	-	2× NiCr-Ni "K"	-35 to +1000	-
901006/66-880-1044-6-250-668/922	-	1× Pt10Rh-Pt "S"	0 to 1300	-
901006/66-880-1044-6-355-668/922	-	1× Pt10Rh-Pt "S"	0 to 1300	-
901006/66-880-1044-6-500-668/922	-	1× Pt10Rh-Pt "S"	0 to 1300	-
901006/66-880-2044-6-250-668/922	-	2× Pt10Rh-Pt "S"	0 to 1300	-
901006/66-880-2044-6-355-668/922	-	2× Pt10Rh-Pt "S"	0 to 1300	-
901006/66-880-2044-6-500-668/922	-	2× Pt10Rh-Pt "S"	0 to 1300	-
901006/66-953-1046-6-250-668/922	-	1× Pt30Rh-Pt6Rh "B"	600 to 1500	-
901006/66-953-1046-6-355-668/922	-	1× Pt30Rh-Pt6Rh "B"	600 to 1500	-
901006/66-953-1046-6-500-668/922	-	1× Pt30Rh-Pt6Rh "B"	600 to 1500	-
901006/66-953-2046-6-250-668/922	-	2× Pt30Rh-Pt6Rh "B"	600 to 1500	-
901006/66-953-2046-6-355-668/922	-	2× Pt30Rh-Pt6Rh "B"	600 to 1500	-
901006/66-953-2046-6-500-668/922	-	2× Pt30Rh-Pt6Rh "B"	600 to 1500	-
901006/45-551-2043-2-100-11-5000/922	-	2× NiCr-Ni "K"	-35 to +1150	-
901006/45-551-2043-2-200-11-2500/922	-	2× NiCr-Ni "K"	-35 to +1150	-
901006/45-551-2043-2-250-11-5000/922	-	2× NiCr-Ni "K"	-35 to +1150	-
901006/45-551-2043-2-1700-11-2500/922	-	2× NiCr-Ni "K"	-35 to +1150	-

Temperature probes for water and oil

Type as of March 01, 2013 Order code	Type up to February 28, 2013	Measuring probe	Temperature range in °C	Weld-in sleeve
901006/54-544-1043-15-710-254/922	-	1× NiCr-Ni "K"	-35 to +550	-
901006/54-544-2043-15-710-254/922	-	2× NiCr-Ni "K"	-35 to +550	-
901006/54-544-1042-15-710-254/922	-	1× Fe-CuNi "L"	-35 to +550	-
901006/54-544-2042-15-710-254/922	-	2× Fe-CuNi "L"	-35 to +550	-
901006/53-543-1042-12-220-815/922	-	1× Fe-CuNi "L"	-35 to +480	x
901006/53-543-2042-12-220-815/922	-	2× Fe-CuNi "L"	-35 to +480	x
901006/45-552-2043-2-100-11-5000/922	-	2× NiCr-Ni "K"	-35 to +1150	-
901006/45-552-2043-2-200-11-2500/922	-	2× NiCr-Ni "K"	-35 to +1150	-
901006/45-552-2043-2-250-11-5000/922	-	2× NiCr-Ni "K"	-35 to +1150	-
901006/45-552-2043-2-1700-11-2500/922	-	2× NiCr-Ni "K"	-35 to +1150	-

JUMO GmbH & Co. KG
Delivery address: Mackenrodtstraße 14, 36039 Fulda, Germany
Postal address: 36035 Fulda, Germany
Phone: +49 661 6003-0
Fax: +49 661 6003-607
e-mail: mail@jumo.net
Internet: www.jumo.net

JUMO Instrument Co. Ltd.
JUMO House
Temple Bank, Riverway
Harlow, Essex CM20 2DY, UK
Phone: +44 1279 635533
Fax: +44 1279 635262
e-mail: sales@jumo.co.uk
Internet: www.jumo.co.uk

JUMO Process Control, Inc.
8 Technology Boulevard
Canastota, NY 13032, USA
Phone: 315-697-JUMO
1-800-554-JUMO
Fax: 315-697-5867
e-mail: info@jumo.us
Internet: www.jumo.us

Screw-in thermocouples with terminal head form B

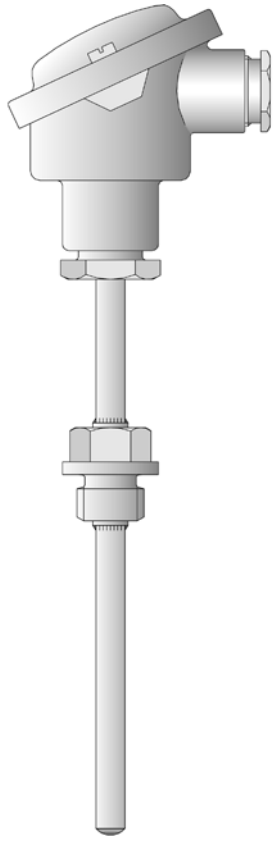

- **For temperatures from -200 to +800 °C**
- **Available with different thermocouples**
- **As single or double thermocouple**
- **Connection head form B, BUZ, BUZH, BBK**
- **Available with transmitter**

Screw-in thermocouples are preferentially used for measuring temperatures in fluids and gases. A decisive selection criterion is the reliable sealing feature of this installation type with vacuum and with overpressure. Application fields are found, amongst others, in heating, furnace/kiln and process technology.
The connection head is suitable for ambient temperatures up to +100 C. The versions BUZ, BUZH and BBK are also available in addition to the standard connection head, form B.
Sheaths made of stainless steel protect the measuring insert against chemical influences and mechanical damage.
Thermocouples (elements) as per DIN EN 60584, class 2 and DIN 43710 are set into the measuring insert. Versions with two thermocouples are also possible.

Technical data

Terminal head	Form B DIN 43729, die-cast aluminum, M 20x1.5; IP65, ambient temperature -40 to +100 °C Form BUZ, die-cast aluminum, M 20x1.5; IP65, ambient temperature -40 to +100 °C Form BUZH, die-cast aluminum, M 20x1.5; IP65, ambient temperature -40 to +100 °C Form BBK, plastic, M 20x1.5; IP54, ambient temperature -30 to +130 °C Caution: reduced ambient temperature range when using transmitters, Data sheets 70.7010 and 70.7060
Extension tube	Stainless steel 1.4571, length 130 mm
Process connection	thread, stainless steel 1.4571
Sheath	Stainless steel 1.4571, diameter 9 mm
Measuring insert	Exchangeable, insulated structure: 1x Fe-CuNi „J“, DIN EN 60584, cl. 2, operating temperature -200 to +600 °C 1x Fe-CuNi „L“, DIN 43710, cl. 2, operating temperature -200 to +600 °C 1x NiCr-Ni „K“, DIN EN 60584, cl. 2, operating temperature -200 to +800 °C 2x Fe-CuNi „J“, DIN EN 60584, cl. 2, operating temperature -200 to +600 °C 2x Fe-CuNi „L“, DIN 43710, cl. 2, operating temperature -200 to +600 °C 2x NiCr-Ni „K“, DIN EN 60584, cl. 2, operating temperature -200 to +800 °C
Transmitter	Programmable transmitter, 4 to 20 mA/20 to 4 mA output, data sheet 70.7010 Wtrans B programmable head transducer with radio transmission, data sheet 70.7060 (suitable Wtrans receivers, data sheet 90.2931)
Accessories	Sheath, data sheet 90.9710 (90.9721)

JUMO GmbH & Co. KG
Delivery address: Mackenrodtstraße 14, 36039 Fulda, Germany
Postal address: 36035 Fulda, Germany
Phone: +49 661 6003-0
Fax: +49 661 6003-607
e-mail: mail@jumo.net
Internet: www.jumo.net

JUMO Instrument Co. Ltd.
JUMO House
Temple Bank, Riverway
Harlow, Essex CM20 2DY, UK
Phone: +44 1279 635533
Fax: +44 1279 635262
e-mail: sales@jumo.co.uk
Internet: www.jumo.co.uk

JUMO Process Control, Inc.
8 Technology Boulevard
Canastota, NY 13032, USA
Phone: 315-697-JUMO
1-800-554-JUMO
Fax: 315-697-5867
e-mail: info@jumo.us
Internet: www.jumo.us

Dimensions

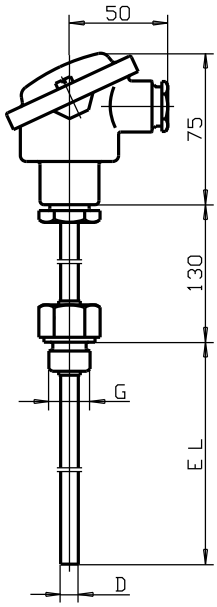

Basic type 901020/10

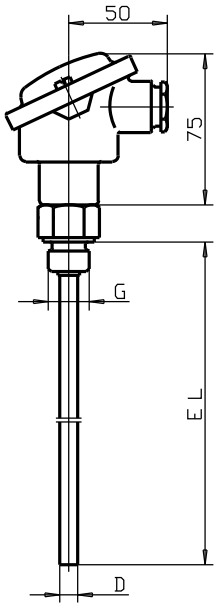

Basic type 901020/20

JUMO GmbH & Co. KG
Delivery address: Mackenrodtstraße 14, 36039 Fulda, Germany
Postal address: 36035 Fulda, Germany
Phone: +49 661 6003-0
Fax: +49 661 6003-607
e-mail: mail@jumo.net
Internet: www.jumo.net

JUMO Instrument Co. Ltd.
JUMO House
Temple Bank, Riverway
Harlow, Essex CM20 2DY, UK
Phone: +44 1279 635533
Fax: +44 1279 635262
e-mail: sales@jumo.co.uk
Internet: www.jumo.co.uk

JUMO Process Control, Inc.
8 Technology Boulevard
Canastota, NY 13032, USA
Phone: 315-697-JUMO
1-800-554-JUMO
Fax: 315-697-5867
e-mail: info@jumo.us
Internet: www.jumo.us

Order specifications: Screw-in thermocouples with connection head form B

			(1)	**Basic type**
		901020/10		Screw-in thermocouple with extension tube and continuous sheath
		901020/20		Screw-in thermocouple without extension tube and continuous sheath
			(2)	**Operating temperature in °C**
x	x	150		-200 to +600 °C
x	x	165		-200 to +800 °C
			(3)	**Measuring insert**
x	x	1040		1x Fe-CuNi "J“
x	x	1042		1x Fe-CuNi "L“
x	x	1043		1x NiCr-Ni "K“
x	x	2040		2x Fe-CuNi „J“
x	x	2042		2x Fe-CuNi „L“
x	x	2043		2x NiCr-Ni „K“
			(4)	**Sheath diameter D in mm**
x	x	9		Ø 9 mm
			(5)	**Fitting length EL in mm (100 ≤EL≤ 1000)**
x	x	160		160 mm
x	x	200		200 mm
x	x	250		250 mm
x	x	300		300 mm
x	x	400		400 mm
x	x	600		600 mm
x	x	...		Specification in plain text (50 mm steps)
			(6)	**Process connection**
x	x	104		Screw-connection G 1/2
x	x	105		Screw-connection G 3/4
x	x	106		Screw connection G 1
x	x	126		Screw-connection M 18 x 1.5
			(7)	**Extra codes**
x	x	000		no extra code
x		306		Extension tube 70 mm
x	x	320		terminal head Form BUZ
x	x	321		terminal head Form BUZH
x	x	322		Connection head form BBK
x	x	331		1x transmitter programmable output 4 to 20 mA/20 to 4 mA[3], data sheet 70.7010
x	x	335		2x transmitter programmable output 4 to 20 mA/20 to 4 mA[3], data sheet 70.7010
x	x	859		1x Wtrans B programmable head transducer with radio transmission, data sheet 70.7060

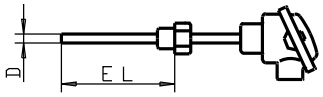

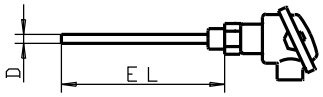

	(1)	-	(2)	-	(3)	-	(4)	-	(5)	-	(6)	/	(7)	
Order code		-		-		-		-		-		/		,...[1]
Order example	901020/10	-	150	-	1042	-	9	-	250	-	104	/	000	

Note: Sheaths, Data Sheet 90.9710 (90.9721)

[1] List extra codes in sequence, separated by commas.
[3] Specify measuring range and output signal in plain text.

JUMO GmbH & Co. KG
Delivery address: Mackenrodtstraße 14, 36039 Fulda, Germany
Postal address: 36035 Fulda, Germany
Phone: +49 661 6003-0
Fax: +49 661 6003-607
e-mail: mail@jumo.net
Internet: www.jumo.net

JUMO Instrument Co. Ltd.
JUMO House
Temple Bank, Riverway
Harlow, Essex CM20 2DY, UK
Phone: +44 1279 635533
Fax: +44 1279 635262
e-mail: sales@jumo.co.uk
Internet: www.jumo.co.uk

JUMO Process Control, Inc.
8 Technology Boulevard
Canastota, NY 13032, USA
Phone: 315-697-JUMO
1-800-554-JUMO
Fax: 315-697-5867
e-mail: info@jumo.us
Internet: www.jumo.us

Accessories for programmable 2-wire transmitter type 707010 in the accessories data sheet 70.9770

Part	Sales No.:
PC interface with TTL/RS232 converter and adapter (socket connector)	70/00350260
PC interface with USB/TTL converter, adapter (socket connector) and adapter (pins)	70/00456352
Special programming (standard measuring range 0 to 100 °C)	-
Setup program on CD-ROM, multilingual	70/00378733

Accessories for Wtrans B, programmable head transmitter with radio transmission Type 707060

Part	Sales No.:
Lithium battery 3.6 V, 2.2 Ah (size AA)	70/00547559
PC interface with USB/TTL converter, adapter (socket) and adapter (pins)	70/00456352
PC interface with TTL/RS232 converter and adapter (socket connector)	70/00350260
Setup program on CD-ROM, multilingual	70/00488887
Setup program including OnlineChart on CD-ROM, multilingual	70/00549067
OnlineChart activation	70/00549188

JUMO GmbH & Co. KG
Delivery address: Mackenrodtstraße 14, 36039 Fulda, Germany
Postal address: 36035 Fulda, Germany
Phone: +49 661 6003-0
Fax: +49 661 6003-607
E-mail: mail@jumo.net
Internet: www.jumo.net

JUMO Instrument Co. Ltd.
JUMO House
Temple Bank, Riverway
Harlow - Essex CM20 2DY, UK
Phone: +44 1279 63 55 33
Fax: +44 1279 63 52 62
E-mail: sales@jumo.co.uk
Internet: www.jumo.co.uk

JUMO Process Control, Inc.
8 Technology Boulevard
Canastota, NY 13032, USA
Phone: 315-697-JUMO
1-800-554-JUMO
Fax: 315-697-5867
E-mail: info@jumo.us
Internet: www.jumo.us

Screw-in thermocouples with terminal head form J

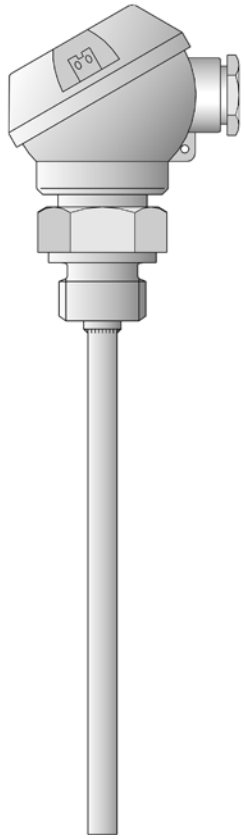

- **for temperatures from -200 to +800°C**
- **As single or double thermocouples**
- **Structure isolated or connected with thermowell**
- **Protection class IP65**

Screw-in thermocouples are preferentially used for measuring temperatures in liquids and gases. A decisive selection criterion is the reliable sealing feature of this installation type with vacuum and with overpressure. The application areas are, among others, in the HVAC, kiln and apparatus engineering sector.

The measuring insert is equipped with thermal pairs (thermocouples) according to DIN EN 60 584 and/or DIN 43 710 as a standard. Versions with two thermocouples are also possible.

Technical Data

Terminal head	Form J, die-cast aluminum, M 16x1.5; IP65, ambient temperature -40 to +100°C
Process connection	thread, stainless steel 1.4571
Protection tube	Stainless steel 1.4571, Ø 6mm
Measuring insert	Insulated structure: 1 x Fe-CuNi „J“, DIN EN 60 584, cl. 2, operating temperature -200 to +600°C 1 x Fe-CuNi „L“, DIN 43 710, cl. 2, operating temperature -200 to +600°C 1 x NiCr-Ni „K“, DIN EN 60 584, cl. 2, operating temperature -200 to +800°C 2 x Fe-CuNi „J“, DIN EN 60 584, cl. 2, operating temperature -200 to +600°C 2 x Fe-CuNi „L“, DIN 43 710, cl. 2, operating temperature -200 to +600°C 2 x NiCr-Ni „K“, DIN EN 60 584, cl. 2, operating temperature -200 to +800°C
Accessories	Thermowell, Data Sheet 90.9721

2009-10-19/00314537

JUMO GmbH & Co. KG
Delivery address: Mackenrodtstraße 14,
36039 Fulda, Germany
Postal address: 36035 Fulda, Germany
Phone: +49 661 6003-0
Fax: +49 661 6003-607
E-mail: mail@jumo.net
Internet: www.jumo.net

JUMO Instrument Co. Ltd.
JUMO House
Temple Bank, Riverway
Harlow - Essex CM20 2DY, UK
Phone: +44 1279 63 55 33
Fax: +44 1279 63 52 62
E-mail: sales@jumo.co.uk
Internet: www.jumo.co.uk

JUMO Process Control, Inc.
8 Technology Boulevard
Canastota, NY 13032, USA
Phone: 315-697-JUMO
1-800-554-JUMO
Fax: 315-697-5867
E-mail: info@jumo.us
Internet: www.jumo.us

Dimensions

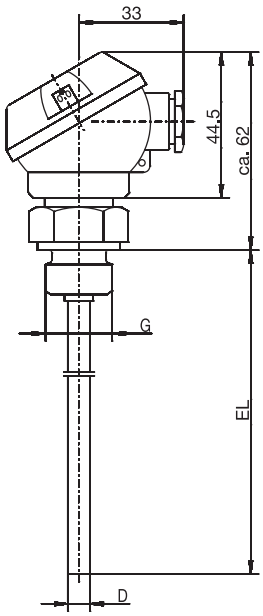

Type 901030/10

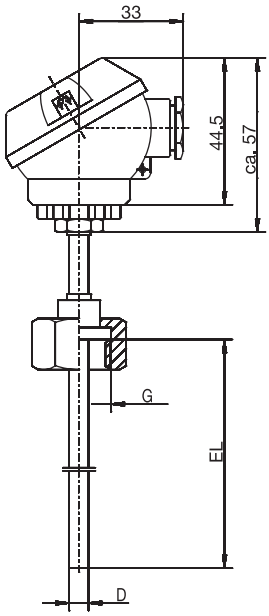

Type 901030/20

JUMO GmbH & Co. KG
Delivery address: Mackenrodtstraße 14, 36039 Fulda, Germany
Postal address: 36035 Fulda, Germany
Phone: +49 661 6003-0
Fax: +49 661 6003-607
E-mail: mail@jumo.net
Internet: www.jumo.net

JUMO Instrument Co. Ltd.
JUMO House
Temple Bank, Riverway
Harlow - Essex CM20 2DY, UK
Phone: +44 1279 63 55 33
Fax: +44 1279 63 52 62
E-mail: sales@jumo.co.uk
Internet: www.jumo.co.uk

JUMO Process Control, Inc.
8 Technology Boulevard
Canastota, NY 13032, USA
Phone: 315-697-JUMO
1-800-554-JUMO
Fax: 315-697-5867
E-mail: info@jumo.us
Internet: www.jumo.us

Order details: Screw-in thermocouples with terminal head form J

(1) Basic type

901030/10		Screw-in thermocouple with continuous thermowell
901030/20		Screw-in thermocouple with continuous thermowell and union nut

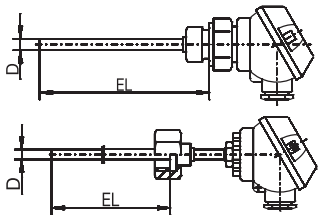

			(2) Operating temperature in °C
x	x	130	-200 to +400°C
x	x	150	-200 to +600°C
x	x	165	-200 to +800°C
			(3) Measuring insert
x	x	1040	1 x Fe-CuNi „J“
x	x	1042	1 x Fe-CuNi „L“
x	x	1043	1 x NiCr-Ni „K“
x	x	2040	2 x Fe-CuNi „J“
x	x	2042	2 x Fe-CuNi „L“
x	x	2043	2 x NiCr-Ni „K“
			(4) Protection tube diameter D in mm
x	x	6	Ø 6mm
			(5) Fitting length EL in mm (50 ≤ EL ≤ 600, EL ≥ 150 for basic type 901030/20)
x		50	50mm
x		75	75mm
x		100	100mm
x	x	150	150mm
x	x	200	200mm
x	x	250	250mm
x	x	300	300mm
x	x	...	please specify in plain text (50mm steps)
			(6) Process connection
x		102	Screw connection (thread) G 1/4
x		103	Screw connection (thread) G 3/8
x		104	Screw connection (thread) G 1/2
	x	164	Union nut G 1/2
	x	165	Union nut G 3/4
			(7) Extra codes
x	x	000	None

	(1)	-	(2)	-	(3)	-	(4)	-	(5)	-	(6)	/	(7)
Order code		-		-		-		-		-		/	
Order example	901030/10	-	130	-	1042	-	6	-	100	-	104	/	000

Note: Thermowell, Data Sheet 90.9721

Stock versions

(1)		(2)		(3)		(4)		(5)		(6)		(7)	Part No.
901030/10	-	150	-	1042	-	6	-	100	-	104	/	000	90/00407109
901030/10	-	150	-	1042	-	6	-	200	-	104	/	000	90/00520186

JUMO GmbH & Co. KG
Delivery address: Mackenrodtstraße 14, 36039 Fulda, Germany
Postal address: 36035 Fulda, Germany
Phone: +49 661 6003-0
Fax: +49 661 6003-607
E-mail: mail@jumo.net
Internet: www.jumo.net

JUMO Instrument Co. Ltd.
JUMO House
Temple Bank, Riverway
Harlow - Essex CM20 2DY, UK
Phone: +44 1279 63 55 33
Fax: +44 1279 63 52 62
E-mail: sales@jumo.co.uk
Internet: www.jumo.co.uk

JUMO Process Control, Inc.
8 Technology Boulevard
Canastota, NY 13032, USA
Phone: 315-697-JUMO
1-800-554-JUMO
Fax: 315-697-5867
E-mail: info@jumo.us
Internet: www.jumo.us

Screw-in thermocouples with compensating cable

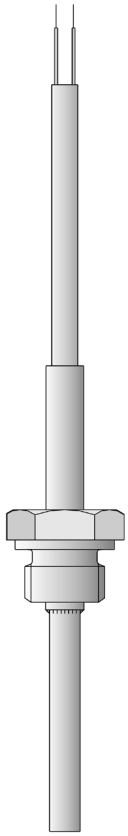

- **for temperatures from -200 to +600°C**
- **available with different thermocouples**
- **as single or twin thermocouple**
- **compensating cable in silicone or with metal braiding**

Screw-in thermocouples are preferred for measuring temperatures in liquids and gases. An important selection criterion is their reliable sealing against both negative and positive pressures. Applications include heating installations, ovens, furnaces and plant engineering.

Depending on the version, the compensating cables are suitable for use in dry and humid areas within a temperature range from -20 to +350°C. The connection of the cable to the protection tube incorporates strain relief and can be provided with a cable protector (option).

Protection tubes in stainles steel protect the measuring insert from chemical influences and mechanical damage.

The measuring insert is fitted with thermocouples to EN 60 584 and DIN 43 710. Versions with two thermocouples are also available.

Technical data

Connection	available with cable ends as: bare wires, ferrules, with receptacles or multipole connector
Compensating cable	silicone, ambient temperature -50 to +180°C metal braiding, ambient temperature -20 to +350°C
Process connection	thread, stainless steel 1.4571
Protection tube	stainless steel 1.4571, 6mm and 8mm dia.
Measuring insert	insulated assembly: 1 x Fe-Con L, DIN 43 710, Cl. 2, operating temperature -200 to +600°C 1 x NiCr-Ni K, EN 60 584, Cl. 2, operating temperature -200 to +600°C 2 x Fe-Con L, DIN 43 710, Cl. 2, operating temperature -200 to +600°C 2 x NiCr-Ni K, EN 60 584, Cl. 2, operating temperature -200 to +600°C
Accessories	pockets, Data Sheet 90.9721

JUMO GmbH & Co. KG
Delivery address: Mackenrodtstraße 14,
36039 Fulda, Germany
Postal address: 36035 Fulda, Germany
Phone: +49 661 6003-0
Fax: +49 661 6003-607
E-mail: mail@jumo.net
Internet: www.jumo.net

JUMO Instrument Co. Ltd.
JUMO House
Temple Bank, Riverway
Harlow - Essex CM20 2DY, UK
Phone: +44 1279 63 55 33
Fax: +44 1279 63 52 62
E-mail: sales@jumo.co.uk
Internet: www.jumo.co.uk

JUMO Process Control, Inc.
8 Technology Boulevard
Canastota, NY 13032, USA
Phone: 315-697-JUMO
1-800-554-JUMO
Fax: 315-697-5867
E-mail: info@jumo.us
Internet: www.jumo.us

Dimensions

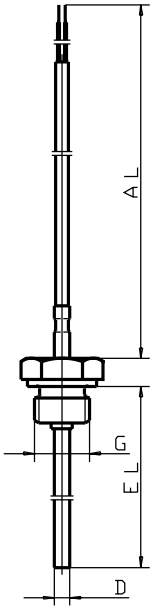

Type 901050/10

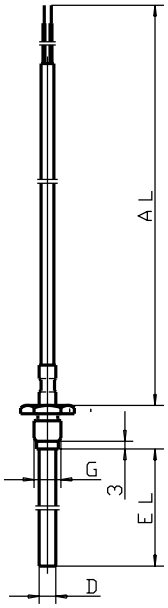

Type 901050/20

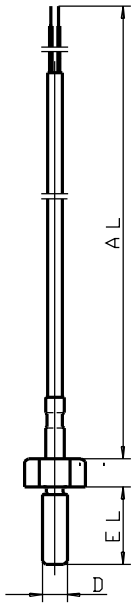

Type 901050/30

JUMO GmbH & Co. KG
Delivery address: Mackenrodtstraße 14, 36039 Fulda, Germany
Postal address: 36035 Fulda, Germany
Phone: +49 661 6003-0
Fax: +49 661 6003-607
E-mail: mail@jumo.net
Internet: www.jumo.net

JUMO Instrument Co. Ltd.
JUMO House
Temple Bank, Riverway
Harlow - Essex CM20 2DY, UK
Phone: +44 1279 63 55 33
Fax: +44 1279 63 52 62
E-mail: sales@jumo.co.uk
Internet: www.jumo.co.uk

JUMO Process Control, Inc.
8 Technology Boulevard
Canastota, NY 13032, USA
Phone: 315-697-JUMO
1-800-554-JUMO
Fax: 315-697-5867
E-mail: info@jumo.us
Internet: www.jumo.us

Order details: Screw-in thermocouples with compensating cable

				(1) Basic version
			901050/10	Screw-in thermocouple with fixed screw fitting
			901050/20	Screw-in thermocouple with loose screw fitting
			901050/30	Screw-in thermocouple with screw-in protection tube
				(2) Operating temperature in °C / compensating cable
x	x		150	-200 to +600°C / metal braiding
x	x	x	380	-50 to +200°C / silicone
x	x	x	390	-50 to +300°C / metal braiding
x	x		402	-50 to +400°C / metal braiding
				(3) Measuring insert
x	x	x	1042	1 x Fe-Con L
x	x	x	1043	1 x NiCr-Ni K
x	x		2042	2 x Fe-Con L
x	x		2043	2 x NiCr-Ni K
				(4) Protection tube diameter D in mm
x	x		6	6mm
		x	8	8mm (M 8)
				(5) Fitting length EL in mm (50≤ EL ≤500 for Type 901050/10, 901050/20)
	x		17	17mm
		x	25	25mm
	x		37	37mm
x			100	100mm
	x		137	137mm
x	x		...	please specify in plain text (50mm steps)
				(6) Process connection
x			104	thread 1/2"pipe
x			105	thread 3/4"pipe
x			106	thread 1"pipe
		x	111	thread M 8
	x		114	thread M 10 x 1
				(7) Compensating cable end
x	x	x	03	bare cable ends
x	x	x	11	ferrules to DIN 46 228 Part 4 (standard)
x	x	x	13	receptacle 6.3 to DIN 46 247
x	x	x	80	multipole connector (please specify type in plain text)
				(8) Compensating cable length AL in mm (500≤ AL ≤500000)
x	x	x	2500	2500mm
x	x	x	...	please specify in plain text (500mm steps)
				(9) Extra codes
x	x	x	000	no extra code
x	x	x	309	uninsulated assembly (thermocouple welded to tip)
x	x	x	315	cable protector: coil
x	x	x	316	cable protector: tube

	(1)		(2)		(3)		(4)		(5)		(6)		(7)		(8)		(9)	
Order code	[ ]	-	[ ]	-	[ ]	-	[ ]	-	[ ]	-	[ ]	-	[ ]	-	[ ]	/	[ ]	,...
Order example	901050/10	-	150	-	1042	-	6	-	100	-	104	-	11	-	2500	/	000[1]	

1. List extra codes in sequence, separated by commas.

JUMO GmbH & Co. KG
Delivery address: Mackenrodtstraße 14
36039 Fulda, Germany
Postal address: 36035 Fulda, Germany
Phone: +49 661 6003-0
Fax: +49 661 6003-607
E-mail: mail@jumo.net
Internet: www.jumo.net

JUMO Instrument Co. Ltd.
JUMO House
Temple Bank, Riverway
Harlow, Essex CM20 2DY, UK
Phone: +44 1279 635533
Fax: +44 1279 635262
E-mail: sales@jumo.co.uk
Internet: www.jumo.co.uk

JUMO Process Control, Inc.
8 Technology Boulevard
Canastota, NY 13032, USA
Phone: 315-697-5866
1-800-554-JUMO
Fax: 315-697-5867
E-mail: info.us@jumo.net
Internet: www.jumousa.com

Screw-in melt thermocouples

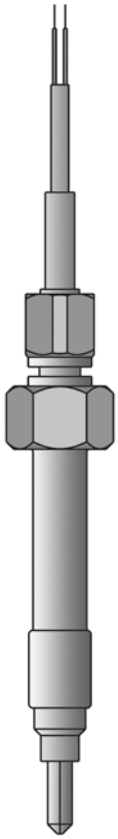

- Temperature range from -40 ... +600 °C
- Available with different thermocouples
- Stainless steel thermowell and probe tip
- Structure insulated or connected with probe tip
- Ceramic insulated probe tip
- For application in the plastics processing industry

Screw-in melt thermocouples are preferably used for temperature measurement to record the melt temperature in the plastics processing industry.
Blade shaped or plane probe tips ensure optimum temperature recording depending on the requirements. Depending on their version, the thermal lines are suitable for a temperature range of -40 ... +400 °C.
The measuring insert is equipped with thermal pairs (thermocouples) according to DIN EN 60584 and/or DIN 43710 as a standard.

Technical Data

Connection	Stripped wire ends, with ferrules, also available with multi-pole connector, Connector, 2-pin, IP50
Thermal line	PTFE, ambient temperature -40 ... +260 °C metal braiding, ambient temperature -40 ... +400 °C
Process connection	thread, stainless steel 1.4571
Thermowell	stainless steel 1.4571
Measuring insert	Insulated structure 1× Fe-CuNi "J", DIN EN 60584, cl. 2, operating temperature -40 ... +400 °C (+600 °C) 1× Fe-CuNi "L", DIN 43710, cl. 2, operating temperature -40 ... +400 °C (+600 °C) 1× NiCr-Ni "K", DIN EN 60584, cl. 2, operating temperature -40 ... +400 °C (+600 °C)
Accessories	Mating connector 2-pin, size II, data sheet 909760, Pos. 5

JUMO GmbH & Co. KG
Delivery address: Mackenrodtstraße 14
36039 Fulda, Germany
Postal address: 36035 Fulda, Germany
Phone: +49 661 6003-0
Fax: +49 661 6003-607
E-mail: mail@jumo.net
Internet: www.jumo.net

JUMO Instrument Co. Ltd.
JUMO House
Temple Bank, Riverway
Harlow, Essex CM20 2DY, UK
Phone: +44 1279 635533
Fax: +44 1279 635262
E-mail: sales@jumo.co.uk
Internet: www.jumo.co.uk

JUMO Process Control, Inc.
8 Technology Boulevard
Canastota, NY 13032, USA
Phone: 315-697-5866
1-800-554-JUMO
Fax: 315-697-5867
E-mail: info.us@jumo.net
Internet: www.jumousa.com

Dimensions

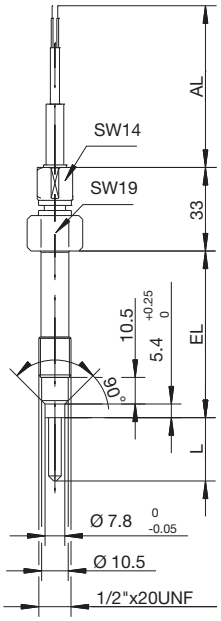

Basic type 901090/10 ...
1/2" × 20 UNF

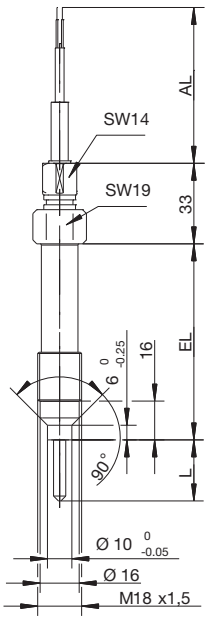

Basic type 901090/10 ...
M18 × 1.5

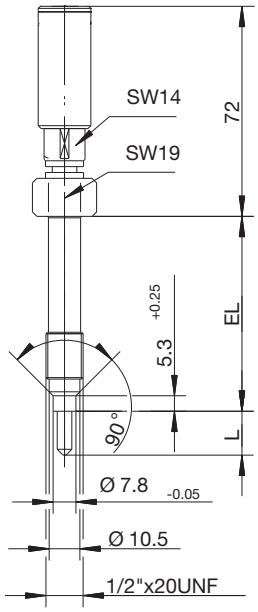

Basic type 901090/20 ...
1/2" × 20 UNF

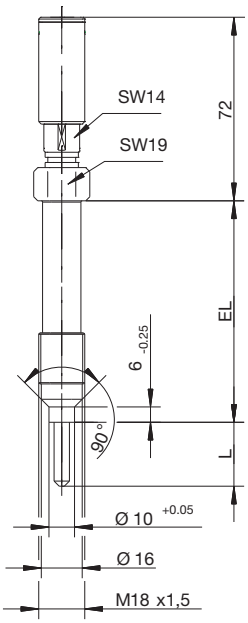

Basic type 901090/20 ...
M18 × 1.5

JUMO GmbH & Co. KG
Delivery address: Mackenrodtstraße 14
36039 Fulda, Germany
Postal address: 36035 Fulda, Germany
Phone: +49 661 6003-0
Fax: +49 661 6003-607
E-mail: mail@jumo.net
Internet: www.jumo.net

JUMO Instrument Co. Ltd.
JUMO House
Temple Bank, Riverway
Harlow, Essex CM20 2DY, UK
Phone: +44 1279 635533
Fax: +44 1279 635262
E-mail: sales@jumo.co.uk
Internet: www.jumo.co.uk

JUMO Process Control, Inc.
8 Technology Boulevard
Canastota, NY 13032, USA
Phone: 315-697-5866
1-800-554-JUMO
Fax: 315-697-5867
E-mail: info.us@jumo.net
Internet: www.jumousa.com

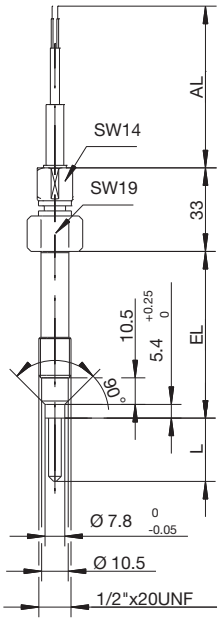

Basic type 901090/50 ...
1/2" × 20 UNF

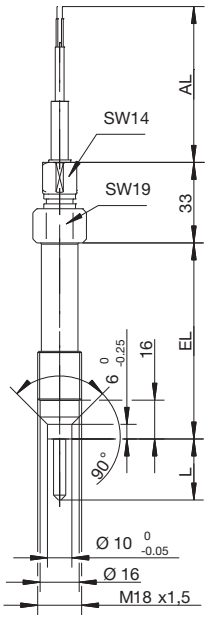

Basic type 901090/50 ...
M18 × 1.5

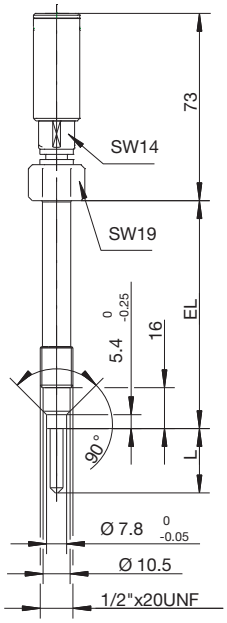

Basic type 901090/60 ...
1/2" × 20 UNF

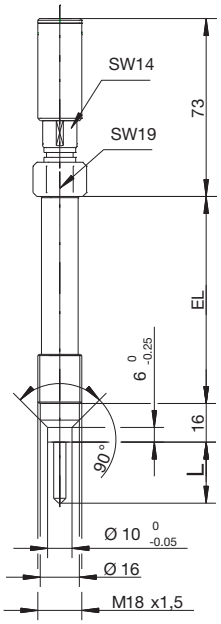

Basic type 901090/60 ...
M18 × 1.5

JUMO GmbH & Co. KG
Delivery address: Mackenrodtstraße 14
36039 Fulda, Germany
Postal address: 36035 Fulda, Germany
Phone: +49 661 6003-0
Fax: +49 661 6003-607
E-mail: mail@jumo.net
Internet: www.jumo.net

JUMO Instrument Co. Ltd.
JUMO House
Temple Bank, Riverway
Harlow, Essex CM20 2DY, UK
Phone: +44 1279 635533
Fax: +44 1279 635262
E-mail: sales@jumo.co.uk
Internet: www.jumo.co.uk

JUMO Process Control, Inc.
8 Technology Boulevard
Canastota, NY 13032, USA
Phone: 315-697-5866
1-800-554-JUMO
Fax: 315-697-5867
E-mail: info.us@jumo.net
Internet: www.jumousa.com

Order details: Screw-in melt thermocouples

(1) Basic type

901090/10	Screw-in melt thermocouples with thermal line
901090/20	Screw-in melt thermocouples with plug connector (LEMO device outlet ERA-2S)
901090/50	Screw-in melt thermocouples with thermal line and ceramic insulated probe tip
901090/60	Screw-in melt thermocouples with plug connector (LEMO device outlet ERA-2S) and ceramic insulated probe tip

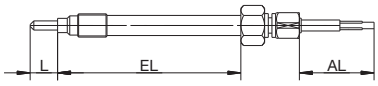

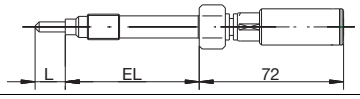

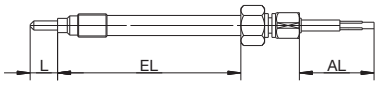

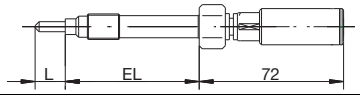

					(2) Operating temperature in °C/thermal line
x	x	x	x	493	-40 ... +260 °C/PTFE
x	x	x	x	505	-40 ... +400 °C/Metal braiding
x	x	x	x	515	-40 ... +600 °C/Metal braiding
					(3) Measuring insert
x	x	x	x	1040	1× Fe-CuNi "J"
x	x	x	x	1042	1× Fe-CuNi "L"
x	x	x	x	1043	1× NiCr-Ni "K"
					(4) Fitting length EL in mm
x	x	x	x	152	152 mm (Standard)
x	x	x	x	...	Specifications in plain text
					(5) Probe tip shape
x	x			1	Flat
x	x	x	x	4	Blade
					(6) Probe tip length L in mm
x	x			0	Flat
x	x	x	x	5	5 mm
x	x	x	x	10	10 mm
x	x	x	x	15	15 mm
x	x	x	x	20	20 mm
x	x	x	x	25	25 mm
					(7) Material/surface of the probe tip
x	x	x	x	26	1.4571 (Standard)
x	x	x	x	39	1.4571 coating as per agreement
					(8) Process connection
x	x	x	x	126	M18 × 1.5
x	x	x	x	153	1/2" × 20 UNF
					(9) Thermal line end
	x		x	00	None
x		x		03	stripped wires
x		x		11	Ferrules as per DIN 46228 Part 4 (Standard)
x		x		80	Multi-pole connector (enter type in plain text)
					(10) Thermal line length AL in mm
	x		x	0000	None
x		x		3000	3000 mm
x		x		...	Please specify in plain text (500 mm steps)
					(11) Extra codes
x	x	x	x	000	None
x	x	x	x	309	uninsulated structure (element welded to the base)
x		x		315	Anti-kink spring
x		x		853	Metal protection hose on the thermal line

	(1)		(2)		(3)		(4)		(5)		(6)		(7)		(8)		(9)		(10)		(11)	
Order code	[ ]	-	[ ]	-	[ ]	-	[ ]	-	[ ]	-	[ ]	-	[ ]	-	[ ]	-	[ ]	-	[ ]	/	[ ]	, ...[1]
Order example	901090/10	-	505	-	1042	-	152	-	4	-	15	-	26	-	153	-	11	-	3000	/	315	

[1] List extra codes in sequence, separated by commas.

JUMO GmbH & Co. KG
Delivery address: Mackenrodtstraße 14
36039 Fulda, Germany
Postal address: 36035 Fulda, Germany
Phone: +49 661 6003-0
Fax: +49 661 6003-607
E-mail: mail@jumo.net
Internet: www.jumo.net

JUMO Instrument Co. Ltd.
JUMO House
Temple Bank, Riverway
Harlow, Essex CM20 2DY, UK
Phone: +44 1279 635533
Fax: +44 1279 635262
E-mail: sales@jumo.co.uk
Internet: www.jumo.co.uk

JUMO Process Control, Inc.
8 Technology Boulevard
Canastota, NY 13032, USA
Phone: 315-697-5866
1-800-554-JUMO
Fax: 315-697-5867
E-mail: info.us@jumo.net
Internet: www.jumousa.com

Stock version

(1)		(2)		(3)		(4)		(5)		(6)		(7)		(8)		(9)		(10)		(11)	Part no.
901090/10	-	505	-	1042	-	152	-	4	-	10	-	26	-	153	-	11	-	3000	/	000	00525149

JUMO GmbH & Co. KG
Delivery address: Mackenrodtstraße 14, 36039 Fulda, Germany
Postal address: 36035 Fulda, Germany
Phone: +49 661 6003-0
Fax: +49 661 6003-607
e-mail: mail@jumo.net
Internet: www.jumo.net

JUMO Instrument Co. Ltd.
JUMO House
Temple Bank, Riverway
Harlow, Essex CM20 2DY, UK
Phone: +44 1279 635533
Fax: +44 1279 635262
e-mail: sales@jumo.co.uk
Internet: www.jumo.co.uk

JUMO Process Control, Inc.
8 Technology Boulevard
Canastota, NY 13032, USA
Phone: 315-697-JUMO
1-800-554-JUMO
Fax: 315-697-5867
e-mail: info@jumo.us
Internet: www.jumo.us

Push-in thermocouples with terminal head form A

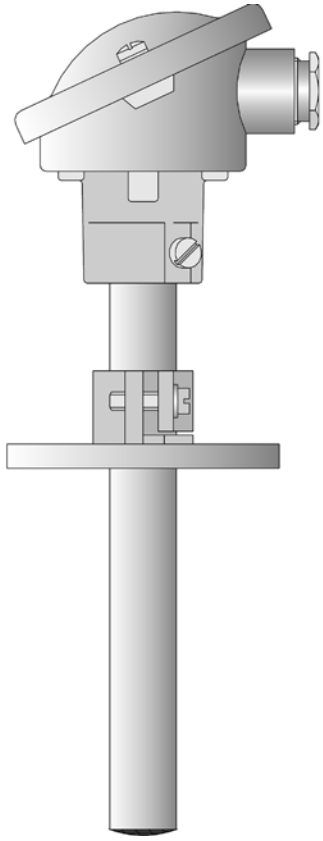

- **For temperatures from -200 to +1600 °C**
- **With thermowells made of various materials**
- **As single or double thermocouple**
- **Available with transmitter**

Push-in thermocouples are preferentially used for measuring temperatures in liquids and gases. The application areas are, among others, in the HVAC, kiln and apparatus engineering sector.

The connection head form A is suitable for ambient temperatures up to +100 °C. The support tube is made of steel. When using a counter flange, see data sheet 90.9750 (90.9725), the installation point can be sealed up to 1 bar.

Sheaths made of various ceramic materials and heat resistant steels protect the measuring insert against chemical influences and mechanical damage. The selection of a suitable sheath material depends on the conditions on site.

Thermocouples (elements) as per DIN EN 60584 and DIN 43710, class 2, are set into the measuring insert. Versions with two thermocouples are also possible.

Technical data

Terminal head	Form A DIN 43729, die-cast aluminum, M 20x1.5; IP54, ambient temperature -40 to +100 °C Caution: reduced ambient temperature when using connection head transmitters, data sheets 70.7010 and 70.7060
Process connection	Sheath screw-connection G 1 Stop flange Ø 22 mm, DIN 43734 Stop flange Ø 32 mm, DIN 43734
Sheath	Steel 1.4749, Ø 22 mm, operating temperature up to +1150 °C (seamless) Steel 1.4841, Ø 22 mm, operating temperature up to +1150 °C (seamless) Ceramic C 610 (KER 610), Ø 15 mm, Ø 24 mm, operating temperatures up to +1300 °C Ceramic C 799 (KER 710), Ø 15 mm, Ø 24 mm, operating temperatures up to +1600 °C
Measuring insert	Insulated structure: 1x Fe-CuNi „J“, DIN EN 60584, cl. 2, operating temperature -200 to +600 °C 1x Fe-CuNi „L“, DIN 43710, cl. 2, operating temperature -200 to +600 °C 1x NiCr-Ni „K“, DIN EN 60584, cl. 2, operating temperature -200 to +1200 °C 1x Pt10Rh-Pt „S“, DIN EN 60584, cl. 2, operating temperature 0 to 1300 °C 1x Pt30Rh-Pt6Rh „B“, DIN EN 60584, cl. 2, operating temperature 600 to 1600 °C 2x Fe-CuNi „J“, DIN EN 60584, cl. 2, operating temperature -200 to +600 °C 2x Fe-CuNi „L“, DIN 43710, cl. 2, operating temperature -200 to +600 °C 2x NiCr-Ni „K“, DIN EN 60584, cl. 2, operating temperature -200 to +1200 °C 2x Pt10Rh-Pt „S“, DIN EN 60584, cl. 2, operating temperature 0 to 1300 °C 2x Pt30Rh-Pt6Rh „B“, DIN EN 60584, cl. 2, operating temperature 600 to 1600 °C
Transmitter	Programmable transmitter, 4 to 20 mA/20 to 4 mA output, data sheet 70.7010 Wtrans B programmable head transducer with radio transmission, data sheet 70.7060 (suitable Wtrans receivers, data sheet 90.2931)

JUMO GmbH & Co. KG
Delivery address: Mackenrodtstraße 14, 36039 Fulda, Germany
Postal address: 36035 Fulda, Germany
Phone: +49 661 6003-0
Fax: +49 661 6003-607
e-mail: mail@jumo.net
Internet: www.jumo.net

JUMO Instrument Co. Ltd.
JUMO House
Temple Bank, Riverway
Harlow, Essex CM20 2DY, UK
Phone: +44 1279 635533
Fax: +44 1279 635262
e-mail: sales@jumo.co.uk
Internet: www.jumo.co.uk

JUMO Process Control, Inc.
8 Technology Boulevard
Canastota, NY 13032, USA
Phone: 315-697-JUMO
1-800-554-JUMO
Fax: 315-697-5867
e-mail: info@jumo.us
Internet: www.jumo.us

Dimensions

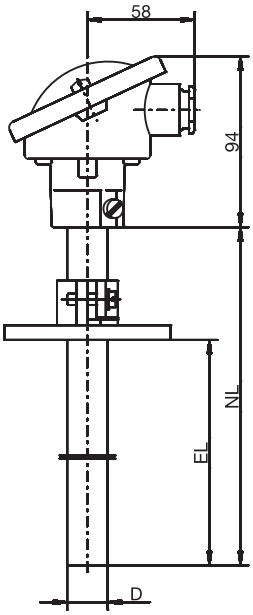

Basic type 901110/10

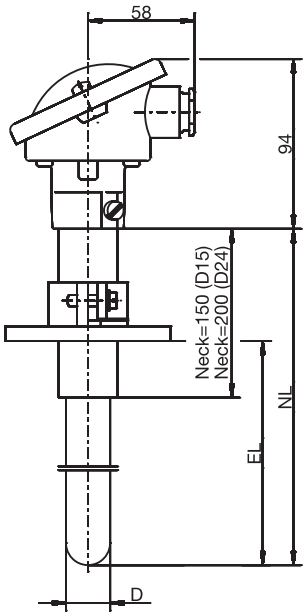

Basic type 901110/20

JUMO GmbH & Co. KG
Delivery address: Mackenrodtstraße 14, 36039 Fulda, Germany
Postal address: 36035 Fulda, Germany
Phone: +49 661 6003-0
Fax: +49 661 6003-607
e-mail: mail@jumo.net
Internet: www.jumo.net

JUMO Instrument Co. Ltd.
JUMO House
Temple Bank, Riverway
Harlow, Essex CM20 2DY, UK
Phone: +44 1279 635533
Fax: +44 1279 635262
e-mail: sales@jumo.co.uk
Internet: www.jumo.co.uk

JUMO Process Control, Inc.
8 Technology Boulevard
Canastota, NY 13032, USA
Phone: 315-697-JUMO
1-800-554-JUMO
Fax: 315-697-5867
e-mail: info@jumo.us
Internet: www.jumo.us

Order specifications: Push-in thermocouples with form A connection head

(1) Basic type

901110/10	Push-in thermocouple with continuous sheath made of heat resistant steel	
901110/20	Push-in thermocouple with stepped sheath made of ceramic	

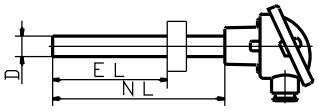

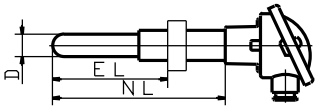

			(2) Measuring insert / operating temperature in °C
x		1040	1x Fe-CuNi „J“, operating temperature -200 to +600 °C
x		1042	1x Fe-CuNi „L“, operating temperature -200 to +600 °C
x	x	1043	1x NiCr-Ni „K“, operating temperature -200 to +1200 °C
	x	1044	1x Pt10Rh-Pt „S“, operating temperature 0 to 1300 °C
	x	1046	1x Pt30Rh-Pt 6 Rh „B“, operating temperature 600 to 1600 °C
x		2040	2x Fe-CuNi „J“, operating temperature -200 to +600 °C
x		2042	2x Fe-CuNi „L“, operating temperature -200 to +600 °C
x	x	2043	2x NiCr-Ni „K“, operating temperature -200 to +1200 °C
	x	2044	2x Pt10Rh-Pt „S“, operating temperature 0 to 1300 °C
	x	2046	2x Pt30Rh-Pt 6 Rh „B“, operating temperature 600 to 1600 °C
			(3) Sheath diameter D in mm
	x	15	Ø 15 mm (support tube Ø 22 mm)
x		22	Ø 22 mm
	x	24	Ø 24 mm (support tube Ø 32 mm)
			(4) Nominal length NL in mm (180 ≤ NL ≤ 1400)
x	x	500	500 mm, fitting length (EL) 100 to 460 mm
x	x	710	710 mm, fitting length (EL) 100 to 670 mm
x	x	1000	1000 mm, fitting length (EL) 100 to 960 mm
x	x	1400	1400 mm, fitting length (EL) 100 to 1360 mm
x	x	...	Specification in plain text (100 mm steps)
			(5) Process connection
x	x	000	None
x		256	Sheath screw-connection G 1 (for a 22 mm diameter only), steel
x	x	669	Stop flange Ø 22 mm, DIN 43734
	x	671	Stop flange Ø 32 mm, DIN 43734
			(6) Sheath material
x		27	Steel X 18 CrNi 28 Mat. No. 1.4749 (operating temperature up to +1150 °C)
x		28	Steel X 15 CrNiSi 25 20 Mat. No. 1.4841 (operating temperature up to +1150 °C)
	x	93	Ceramic C 610 (KER 610) (operating temperature up to +1300 °C)
	x	94	Ceramic C 799 (KER 710) (operating temperature up to +1600 °C)
			(7) Extra codes
x	x	000	None
x	x	331	1x transmitter programmable output 4 to 20 mA/20 to 4 mA[1], data sheet 70.7010
x	x	859	1x Wtrans B programmable head transducer with radio transmission, data sheet 70.7060

	(1)		(2)		(3)		(4)		(5)		(6)		(7)
Order code		-		-		-		-		-		/	
Order example	901110/10	-	1042	-	22	-	710	-	669	-	27	/	000

[1] Specify measuring range and output signal in plain text.

JUMO GmbH & Co. KG
Delivery address: Mackenrodtstraße 14, 36039 Fulda, Germany
Postal address: 36035 Fulda, Germany
Phone: +49 661 6003-0
Fax: +49 661 6003-607
e-mail: mail@jumo.net
Internet: www.jumo.net

JUMO Instrument Co. Ltd.
JUMO House
Temple Bank, Riverway
Harlow, Essex CM20 2DY, UK
Phone: +44 1279 635533
Fax: +44 1279 635262
e-mail: sales@jumo.co.uk
Internet: www.jumo.co.uk

JUMO Process Control, Inc.
8 Technology Boulevard
Canastota, NY 13032, USA
Phone: 315-697-JUMO
1-800-554-JUMO
Fax: 315-697-5867
e-mail: info@jumo.us
Internet: www.jumo.us

Stock versions

(1)		(2)		(3)		(4)		(5)		(6)		(7)	Sales No.:
901110/10	-	1043	-	22	-	500	-	669	-	27	/	000	90/00054836
901110/10	-	1043	-	22	-	710	-	669	-	27	/	000	90/00054837
901110/10	-	1043	-	22	-	1000	-	669	-	27	/	000	90/00054838
901110/10	-	2043	-	22	-	710	-	669	-	27	/	000	90/00054842
901110/20	-	1043	-	15	-	500	-	669	-	93	/	000	90/00054846

Accessories for programmable 2-wire transmitter type 707010 in the accessories data sheet 70.9770

Part	Sales No.:
PC interface with TTL/RS232 converter and adapter (socket connector)	70/00350260
PC interface with USB/TTL converter, adapter (socket connector) and adapter (pins)	70/00456352
Special programming (standard measuring range 0 to 100 °C)	-
Setup program on CD-ROM, multilingual	70/00378733

Accessories for Wtrans B, programmable head transmitter with radio transmission Type 707060

Part	Sales No.:
Lithium battery 3.6 V, 2.2 Ah (size AA)	70/00547559
PC interface with USB/TTL converter, adapter (socket) and adapter (pins)	70/00456352
PC interface with TTL/RS232 converter and adapter (socket connector)	70/00350260
Setup program on CD-ROM, multilingual	70/00488887
Setup program including OnlineChart on CD-ROM, multilingual	70/00549067
OnlineChart activation	70/00549188

JUMO GmbH & Co. KG
Delivery address: Mackenrodtstraße 14, 36039 Fulda, Germany
Postal address: 36035 Fulda, Germany
Phone: +49 661 6003-0
Fax: +49 661 6003-607
e-mail: mail@jumo.net
Internet: www.jumo.net

JUMO Instrument Co. Ltd.
JUMO House
Temple Bank, Riverway
Harlow, Essex CM20 2DY, UK
Phone: +44 1279 635533
Fax: +44 1279 635262
e-mail: sales@jumo.co.uk
Internet: www.jumo.co.uk

JUMO Process Control, Inc.
8 Technology Boulevard
Canastota, NY 13032, USA
Phone: 315-697-JUMO
1-800-554-JUMO
Fax: 315-697-5867
e-mail: info@jumo.us
Internet: www.jumo.us

Push-in thermocouples with connection head form B

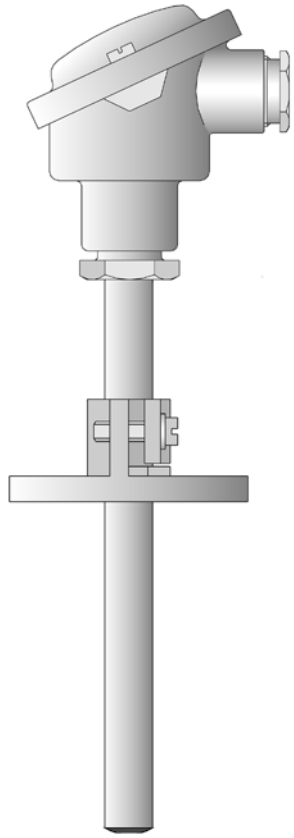

- **For temperatures from -200 to +1600 °C**
- **With thermowells made of various materials**
- **As single or double thermocouple**
- **Connection head form B, BUZ, BUZH, BBK**
- **Available with transmitter**

Push-in thermocouples are preferentially used for measuring temperatures in liquids and gases. The application areas are, among others, in the HVAC, kiln and apparatus engineering sector.

The connection head form B is suitable for ambient temperatures up to +100 °C. The support tube is made of steel. When using a counter flange, see data sheet 90.9750 (90.9725), the installation point can be sealed up to 1 bar.

Sheaths made of various materials protect the measuring insert against chemical influences and mechanical damage. The selection of a suitable sheath material depends on the conditions on site.

Thermocouples (elements) as per DIN EN 60584 and DIN 43710, class 2, are set into the measuring insert. Versions with two thermocouples are also possible.

Technical data

Terminal head	Form B DIN 43729, die-cast aluminum, M 20x1.5; IP65, ambient temperature -40 to +100 °C Form BUZ, die-cast aluminum, M 20x1.5; IP65, ambient temperature -40 to +100 °C Form BUZH, die-cast aluminum, M 20x1.5; IP65, ambient temperature -40 to +100 °C Form BBK, plastic, M 20x1.5; IP54, ambient temperature -30 to +130 °C Caution: reduced ambient temperature range when using connection head transmitters, data sheets 70.7010 and 70.7060
Process connection	Sheath screw-connection G 1/2 Stop flange Ø 15 mm, DIN 43734
Sheath	Steel 1.4749, Ø 15 mm, operating temperature up to +1150 °C (seamless) Steel 1.4841, Ø 15 mm, operating temperature up to +1150 °C (seamless) Ceramic C 799 (KER 710), Ø 6 mm, Ø 8 mm, Ø 10 mm, operating temperatures up to +1600 °C
Measuring insert	Insulated structure: 1x Fe-CuNi „J“, DIN EN 60584, cl. 2, operating temperature -200 to +600 °C 1x Fe-CuNi „L“, DIN 43710, cl. 2, operating temperature -200 to +600 °C 1x NiCr-Ni „K“, DIN EN 60584, cl. 2, operating temperature -200 to +1200 °C 1x Pt10Rh-Pt „S“, DIN EN 60584, cl. 2, operating temperature 0 to 1300 °C 1x Pt30Rh-Pt6Rh „B“, DIN EN 60584, cl. 2, operating temperature 600 to 1600 °C 2x Fe-CuNi „J“, DIN EN 60584, cl. 2, operating temperature -200 to +600 °C 2x Fe-CuNi „L“, DIN 43710, cl. 2, operating temperature -200 to +600 °C 2x NiCr-Ni „K“, DIN EN 60584, cl. 2, operating temperature -200 to +1200 °C 2x Pt10Rh-Pt „S“, DIN EN 60584, cl. 2, operating temperature 0 to 1300 °C 2x Pt30Rh-Pt6Rh „B“, DIN EN 60584, cl. 2, operating temperature 600 to 1600 °C
Transmitter	Programmable transmitter output 4 to 20 mA/20 to 4 mA, data sheet 70.7010 Wtrans B programmable head transducer with radio transmission, data sheet 70.7060 (suitable Wtrans receivers, data sheet 90.2931)

JUMO GmbH & Co. KG
Delivery address: Mackenrodtstraße 14, 36039 Fulda, Germany
Postal address: 36035 Fulda, Germany
Phone: +49 661 6003-0
Fax: +49 661 6003-607
e-mail: mail@jumo.net
Internet: www.jumo.net

JUMO Instrument Co. Ltd.
JUMO House
Temple Bank, Riverway
Harlow, Essex CM20 2DY, UK
Phone: +44 1279 635533
Fax: +44 1279 635262
e-mail: sales@jumo.co.uk
Internet: www.jumo.co.uk

JUMO Process Control, Inc.
8 Technology Boulevard
Canastota, NY 13032, USA
Phone: 315-697-JUMO
1-800-554-JUMO
Fax: 315-697-5867
e-mail: info@jumo.us
Internet: www.jumo.us

Dimensions

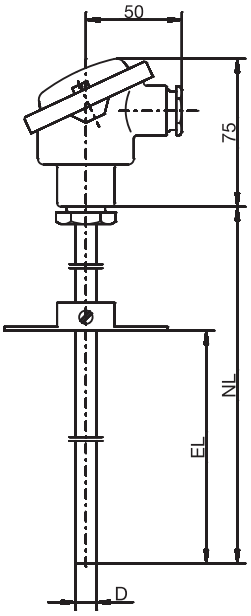

Basic type 901120/10

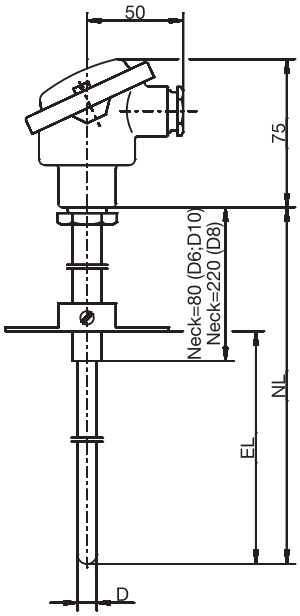

Basic type 901120/20

JUMO GmbH & Co. KG
Delivery address: Mackenrodtstraße 14, 36039 Fulda, Germany
Postal address: 36035 Fulda, Germany
Phone: +49 661 6003-0
Fax: +49 661 6003-607
e-mail: mail@jumo.net
Internet: www.jumo.net

JUMO Instrument Co. Ltd.
JUMO House
Temple Bank, Riverway
Harlow, Essex CM20 2DY, UK
Phone: +44 1279 635533
Fax: +44 1279 635262
e-mail: sales@jumo.co.uk
Internet: www.jumo.co.uk

JUMO Process Control, Inc.
8 Technology Boulevard
Canastota, NY 13032, USA
Phone: 315-697-JUMO
1-800-554-JUMO
Fax: 315-697-5867
e-mail: info@jumo.us
Internet: www.jumo.us

Order specifications: Push-in thermocouples with form B connection head

			(1)	**Basic type**
		901120/10		Push-in thermocouple with continuous sheath made of heat resistant steel
		901120/20		Push-in thermocouple with stepped sheath made of ceramic
			(2)	**Measuring insert / operating temperature in °C**
x		1040		1x Fe-CuNi „J“, operating temperature -200 to +600 °C
x		1042		1x Fe-CuNi „L“, operating temperature -200 to +600 °C
x		1043		1x NiCr-Ni „K“, operating temperature -200 to +1200 °C
	x	1044		1x Pt10Rh-Pt „S“, operating temperature 0 to 1300 °C
	x	1046		1x Pt30Rh-Pt 6 Rh „B“, operating temperature 600 to 1600 °C
x		2040		2x Fe-CuNi „J“, operating temperature -200 to +600 °C
x		2042		2x Fe-CuNi „L“, operating temperature -200 to +600 °C
x		2043		2x NiCr-Ni „K“, operating temperature -200 to +1200 °C
	x	2044		2x Pt10Rh-Pt „S“, operating temperature 0 to 1300 °C
	x	2046		2x Pt30Rh-Pt 6 Rh „B“, operating temperature 600 to 1600 °C
			(3)	**Sheath diameter D in mm**
	x	6		Ø 6 mm (support tube Ø 15 mm)
	x	8		Ø 8 mm (support tube Ø 15 mm)
	x	10		Ø 10 mm (support tube Ø 15 mm)
x		15		Ø 15 mm
			(4)	**Nominal length NL in mm (180 ≤ NL ≤ 1200, NL ≤ 1000 for type 901120/20)**
	x	180		180 mm, fitting length (EL) 100 to 140 mm
x	x	250		250 mm, fitting length (EL) 100 to 210 mm
	x	355		355 mm, fitting length (EL) 100 to 315 mm
x	x	500		500 mm, fitting length (EL) 100 to 460 mm
	x	710		710 mm, fitting length (EL) 100 to 670 mm, for Ø 8 mm only
	x	1000		1000 mm, fitting length (EL) 100 to 960 mm, for Ø 8 mm only
x	x	...		Specification in plain text (50 mm steps)
			(5)	**Process connection**
x	x	000		None
x	x	254		Sheath screw-connection G 1/2
x	x	668		Stop flange Ø 15 mm, DIN 43734
			(6)	**Sheathmaterial**
x		27		Steel X 18 CrNi 28 Mat. No. 1.4749 (operating temperature up to +1150 °C)
x		28		Steel X 15 CrNiSi 25 20 Mat. No. 1.4841 (operating temperature up to +1150 °C)
	x	94		Ceramic C 799 (KER 710) (operating temperature up to +1600 °C)
			(7)	**Extra codes**
x	x	000		None
x	x	320		terminal head Form BUZ
x	x	321		terminal head Form BUZH
x	x	322		Connection head form BBK
x	x	331		1x transmitter programmable output 4 to 20 mA/20 to 4 mA[2], data sheet 70.7010
x	x	335		2x transmitter programmable output 4 to 20 mA/20 to 4 mA[2], data sheet 70.7010
x	x	859		1x Wtrans B head transducer with radio transmission, data sheet 70.7060

	(1)	-	(2)	-	(3)	-	(4)	-	(5)	-	(6)	/	(7)	
Order code		-		-		-		-		-		/		,...[1]
Order example	901120/10	-	1042	-	15	-	250	-	668	-	27	/	000	

[1] List extra codes in sequence, separated by commas.
[2] Specify measuring range and output signal in plain text.

JUMO GmbH & Co. KG
Delivery address: Mackenrodtstraße 14, 36039 Fulda, Germany
Postal address: 36035 Fulda, Germany
Phone: +49 661 6003-0
Fax: +49 661 6003-607
e-mail: mail@jumo.net
Internet: www.jumo.net

JUMO Instrument Co. Ltd.
JUMO House
Temple Bank, Riverway
Harlow, Essex CM20 2DY, UK
Phone: +44 1279 635533
Fax: +44 1279 635262
e-mail: sales@jumo.co.uk
Internet: www.jumo.co.uk

JUMO Process Control, Inc.
8 Technology Boulevard
Canastota, NY 13032, USA
Phone: 315-697-JUMO
1-800-554-JUMO
Fax: 315-697-5867
e-mail: info@jumo.us
Internet: www.jumo.us

Stock version

(1)		(2)		(3)		(4)		(5)		(6)		(7)	Sales No.:
901120/10	-	1043	-	15	-	500	-	668	-	27	/	000	90/00054589

Accessories for programmable 2-wire transmitter type 707010 in the accessories data sheet 70.9770

Part	Sales No.:
PC interface with TTL/RS232 converter and adapter (socket connector)	70/00350260
PC interface with USB/TTL converter, adapter (socket connector) and adapter (pins)	70/00456352
Special programming (standard measuring range 0 to 100 °C)	-
Setup program on CD-ROM, multilingual	70/00378733

Accessories for Wtrans B, programmable head transmitter with radio transmission Type 707060

Part	Sales No.:
Lithium battery 3.6 V, 2.2 Ah (size AA)	70/00547559
PC interface with USB/TTL converter, adapter (socket) and adapter (pins)	70/00456352
PC interface with TTL/RS232 converter and adapter (socket connector)	70/00350260
Setup program on CD-ROM, multilingual	70/00488887
Setup program including OnlineChart on CD-ROM, multilingual	70/00549067
OnlineChart activation	70/00549188

JUMO GmbH & Co. KG
Delivery address: Mackenrodtstraße 14
36039 Fulda, Germany
Postal address: 36035 Fulda, Germany
Phone: +49 661 6003-0
Fax: +49 661 6003-607
E-mail: mail@jumo.net
Internet: www.jumo.net

JUMO Instrument Co. Ltd.
JUMO House
Temple Bank, Riverway
Harlow, Essex CM20 2DY, UK
Phone: +44 1279 635533
Fax: +44 1279 635262
E-mail: sales@jumo.co.uk
Internet: www.jumo.co.uk

JUMO Process Control, Inc.
8 Technology Boulevard
Canastota, NY 13032, USA
Phone: 315-697-5866
1-800-554-JUMO
Fax: 315-697-5867
E-mail: info@jumo.us
Internet: www.jumo.us

Push-in thermocouples with compensating cable

- **for temperatures from -50 to +600 °C**
- **available with different thermocouples**
- **with stainless steel thermowell**
- **silicone compensating cable or with metal braiding**
- **also with 90° cable entry**

Push-in thermocouples are preferred for measuring temperatures on solids, such as hot-plates and welding jaws. Applications include ovens, plant engineering and machinery.

Depending on the version, compensating cables are suitable for use in dry areas within the temperature range -50 to +600 °C. The connection of the cable to the thermowell incorporates strain relief. A cable protector is available as an option.

Thermowells in stainless steel protect the measuring insert from chemical influences and mechanical damage.

Thermocouples (elements) according to DIN EN 60584 and DIN 43710 are used as standard for the measuring insert.

Technical data

Connection	available with cable ends as: bare wires, with ferrules, receptacle or multipole connector (e.g. connectors that are free from thermal emf)
Compensating cable	silicone, ambient temperature -50 to +180 °C metal braiding, ambient temperature -50 to +600 °C
Thermowell	stainless steel 1.4571, 4 mm dia., 6 mm dia.
Measuring insert	insulated assembly: 1× Fe-Con J, DIN 60584, Cl. 2, operating temperature -200 to +600 °C 1× Fe-Con L, DIN 43710, Cl. 2, operating temperature -200 to +600 °C 1× NiCr-Ni K, EN 60584, Cl. 2, operating temperature -200 to +600 °C
Accessories	Pipe screw connection and flanges, data sheet 909750.

JUMO GmbH & Co. KG
Delivery address: Mackenrodtstraße 14
36039 Fulda, Germany
Postal address: 36035 Fulda, Germany
Phone: +49 661 6003-0
Fax: +49 661 6003-607
E-mail: mail@jumo.net
Internet: www.jumo.net

JUMO Instrument Co. Ltd.
JUMO House
Temple Bank, Riverway
Harlow, Essex CM20 2DY, UK
Phone: +44 1279 635533
Fax: +44 1279 635262
E-mail: sales@jumo.co.uk
Internet: www.jumo.co.uk

JUMO Process Control, Inc.
8 Technology Boulevard
Canastota, NY 13032, USA
Phone: 315-697-5866
1-800-554-JUMO
Fax: 315-697-5867
E-mail: info@jumo.us
Internet: www.jumo.us

Dimensions

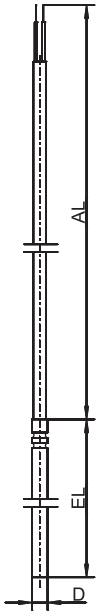

Basic type 901150/10

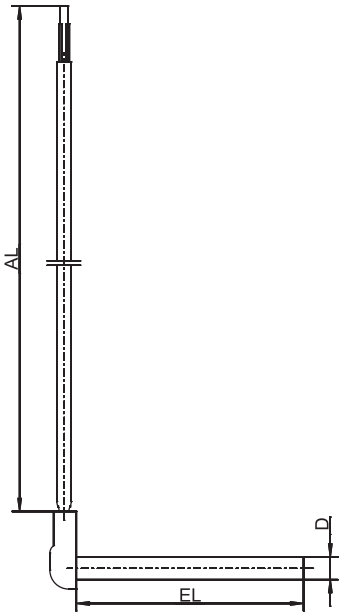

Basic type 901150/20

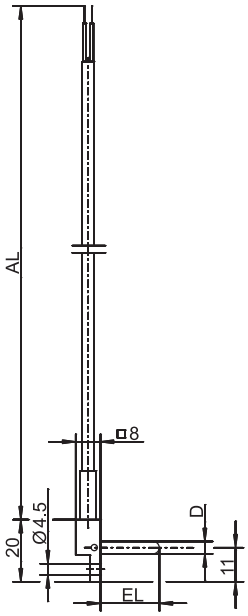

Basic type 901150/44

JUMO GmbH & Co. KG
Delivery address: Mackenrodtstraße 14
36039 Fulda, Germany
Postal address: 36035 Fulda, Germany
Phone: +49 661 6003-0
Fax: +49 661 6003-607
E-mail: mail@jumo.net
Internet: www.jumo.net

JUMO Instrument Co. Ltd.
JUMO House
Temple Bank, Riverway
Harlow, Essex CM20 2DY, UK
Phone: +44 1279 635533
Fax: +44 1279 635262
E-mail: sales@jumo.co.uk
Internet: www.jumo.co.uk

JUMO Process Control, Inc.
8 Technology Boulevard
Canastota, NY 13032, USA
Phone: 315-697-5866
1-800-554-JUMO
Fax: 315-697-5867
E-mail: info@jumo.us
Internet: www.jumo.us

Order details: Push-in thermocouples with compensating cable

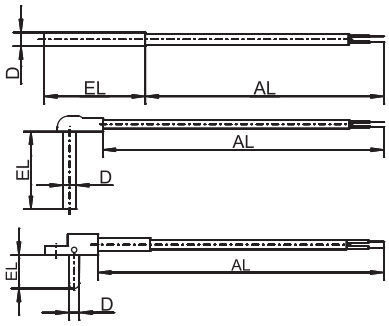

				(1) Basic type
			901150/10	Push-in thermocouple with stainless steel thermowell
			901150/20	Push-in thermocouple with stainless steel thermowell angled at 90°
			901150/44	Push-in thermocouple with stainless steel thermowell angled at 90°
				(2) Operating temperature in °C/compensating cable
x	x		380	-50 to +200 °C/silicone
x	x		390	-50 to +300 °C/metal braiding
	x		840	0 to 300 °C/metal braiding
	x		843	0 to 350 °C/metal braiding
x		x	848	0 to 400 °C/metal braiding
x			858	0 to 600 °C/metal braiding
				(3) Measuring insert
x	x	x	1040	1× Fe-Con J
x	x	x	1042	1× Fe-Con L
x	x		1043	1× NiCr-Ni K
				(4) Thermowell diameter D in mm
		x	4	4 mm
x	x		6	6 mm
				(5) Fitting length EL in mm (EL 40 ... 500 mm for basic type 901150/10)
		x	9	9 mm
	x	x	12	12 mm
x			50	50 mm
	x		60	60 mm
x			100	100 mm
x			200	200 mm
x			300	300 mm
x			...	please specify in plain text (50 mm steps)
				(6) Compensating cable end
x	x	x	03	bare cable ends
x	x	x	11	ferrules (standard)
x	x	x	13	receptacle 6.3
x	x	x	80	multipole connector (please specify type in plain text)
				(7) Compensating cable length AL in mm (AL 500 ... 500000 mm)
x	x	x	2500	2500 mm
x	x	x	...	please specify in plain text (500 mm steps)
				(8) Extra codes
x	x		000	no extra code
x	x	x	309	uninsulated assembly (thermocouple welded to tip)
x		x	315	cable protector: coil
x			316	cable protector: tube

	(1)	-	(2)	-	(3)	-	(4)	-	(5)	-	(6)	-	(7)	/	(8)	
Order code	[ ]	-	[ ]	-	[ ]	-	[ ]	-	[ ]	-	[ ]	-	[ ]	/	[ ]	, ...[1]
Order example	901150/10	-	848	-	1042	-	6	-	100	-	11	-	2500	/	000	

Stock versions

(1)		(2)		(3)		(4)		(5)		(6)		(7)		(8)	**Part no.**
901150/10	-	848	-	1042	-	6	-	50	-	11	-	2500	/	315	00055455
901150/20	-	840	-	1042	-	6	-	60	-	11	-	2500	/	000	00055448

[1] List extra codes in sequence, separated by commas.

JUMO GmbH & Co. KG
Delivery address: Mackenrodtstraße 14, 36039 Fulda, Germany
Postal address: 36035 Fulda, Germany
Phone: +49 661 6003-0
Fax: +49 661 6003-607
E-mail: mail@jumo.net
Internet: www.jumo.net

JUMO Instrument Co. Ltd.
JUMO House
Temple Bank, Riverway
Harlow - Essex CM20 2DY, UK
Phone: +44 1279 63 55 33
Fax: +44 1279 63 52 62
E-mail: sales@jumo.co.uk
Internet: www.jumo.co.uk

JUMO Process Control, Inc.
8 Technology Boulevard
Canastota, NY 13032, USA
Phone: 315-697-JUMO
1-800-554-JUMO
Fax: 315-697-5867
E-mail: info@jumo.us
Internet: www.jumo.us

Push-in thermocouples with bayonet lock

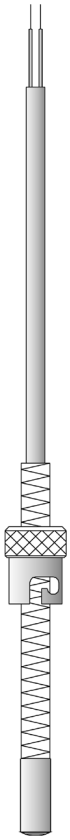

- **for temperatures from 0 to 400°C**
- **as single or twin thermocouple**
- **good heat transfer through adjustable spring pressure**
- **insulated assembly, or joined to protection tube**
- **insertion and removal without tools**

Push-in thermocouples with bayonet lock are preferred for measuring temperatures in solids, bearings and molding tools, for example in the plastics industry. The special form of the measuring tips makes these temperature probes suitable for use in flat-bottom or cone-shaped bores.

The rugged pressure spring, which also functions as a cable protector, is made from rust and acid resistant stainless steel 1.4310 and ensures a steady pressure between the measuring tip and the bottom of the hole. The fitting length can be altered by rotating the bayonet lock. Bayonet locks and suitable sockets are available in the diameters 12, 14.5, 15 and 16mm.

The measuring insert is normally fitted with thermocouples to EN 60 584 or DIN 43 710. Versions with two thermocouples are also available.

Technical data

Connection	available with cable ends as: bare wires, with ferrules, receptacles or multipole connector (e.g. connectors that are free from thermal emf)
Compensating cable	silicone, ambient temperature -50 to +180°C PTFE, ambient temperature -190 to +260°C metal braiding, ambient temperature -20 to +350°C
Process connection	bayonet lock, nickel-plated brass, 12mm, 14.5mm, 15mm or 16mm dia.
Protection tube	stainless steel 1.4571, 6mm and 8mm dia.
Measuring insert	insulated assembly: 1x Fe-Con J, EN 60 584, Cl. 2, operating temperature 0 to 400°C 1x Fe-Con L, DIN 43 710, Cl. 2, operating temperature 0 to 400°C 1x NiCr-Ni K, EN 60 584, Cl. 2, operating temperture 0 to 400°C 2x Fe-Con L, DIN 43 710, Cl. 2, operating temperature 0 to 400°C 2x NiCr-Ni K, EN 60 584, Cl. 2, operating temperature 0 to 400°C
Accessories	bayonet sockets, Data Sheet 90.9725

2009-05-11/00314545

JUMO GmbH & Co. KG
Delivery address: Mackenrodtstraße 14,
36039 Fulda, Germany
Postal address: 36035 Fulda, Germany
Phone: +49 661 6003-0
Fax: +49 661 6003-607
E-mail: mail@jumo.net
Internet: www.jumo.net

JUMO Instrument Co. Ltd.
JUMO House
Temple Bank, Riverway
Harlow - Essex CM20 2DY, UK
Phone: +44 1279 63 55 33
Fax: +44 1279 63 52 62
E-mail: sales@jumo.co.uk
Internet: www.jumo.co.uk

JUMO Process Control, Inc.
8 Technology Boulevard
Canastota, NY 13032, USA
Phone: 315-697-JUMO
1-800-554-JUMO
Fax: 315-697-5867
E-mail: info@jumo.us
Internet: www.jumo.us

Dimensions

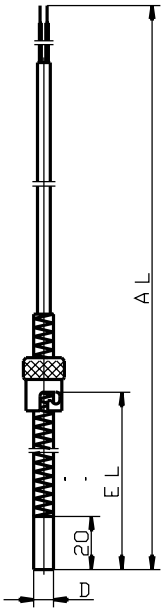

Type 901190/10

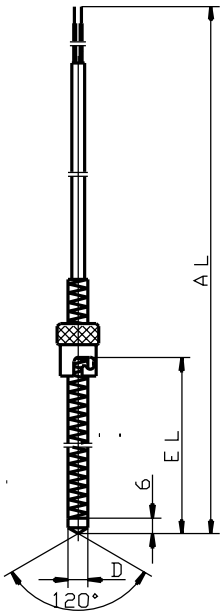

Type 901190/20

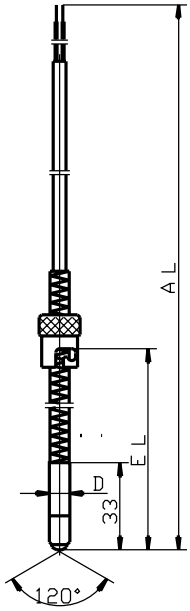

Type 901190/30

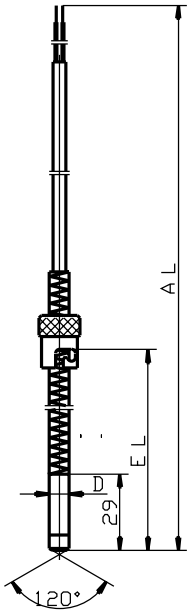

Type 901190/40

JUMO GmbH & Co. KG
Delivery address: Mackenrodtstraße 14, 36039 Fulda, Germany
Postal address: 36035 Fulda, Germany
Phone: +49 661 6003-0
Fax: +49 661 6003-607
E-mail: mail@jumo.net
Internet: www.jumo.net

JUMO Instrument Co. Ltd.
JUMO House
Temple Bank, Riverway
Harlow - Essex CM20 2DY, UK
Phone: +44 1279 63 55 33
Fax: +44 1279 63 52 62
E-mail: sales@jumo.co.uk
Internet: www.jumo.co.uk

JUMO Process Control, Inc.
8 Technology Boulevard
Canastota, NY 13032, USA
Phone: 315-697-JUMO
1-800-554-JUMO
Fax: 315-697-5867
E-mail: info@jumo.us
Internet: www.jumo.us

Order details: Push-in thermocouples with bayonet lock

(1) Basic version

		901190/10	Push-in thermocouple, protection tube/ measuring tip (flat-bottom) stainless steel, Mat. Ref. 1.4571, bayonet lock 12mm dia.
		901190/20	Push-in thermocouple, protection tube/ measuring tip (120°) stainless steel, Mat. Ref. 1.4571, bayonet lock 12mm dia.

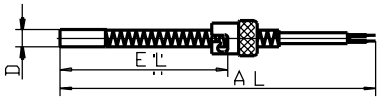

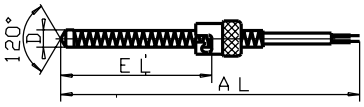

			(2) Operating temperature in °C/compensating cable
x	x	832	0 to 200°C/silicone
x	x	835	0 to 260°C/metal braiding
x	x	836	0 to 260°C/PTFE
x	x	848	0 to 400°C/metal braiding
			(3) Measuring insert
x	x	1040	1 x Fe-Con J
x	x	1042	1 x Fe-Con L
x	x	1043	1 x NiCr-Ni K
x	x	2042	2 x Fe-Con L
x	x	2043	2 x NiCr-Ni K
			(4) Protection tube diameter D in mm
x		6	6mm
x	x	8	8mm
			(5) Fitting length EL in mm
x		175	20 - 175mm
	x	240	6 - 240mm
			(6) Compensating cable end
x	x	03	bare cable ends
x	x	11	ferrules to DIN 46 228 Part 4 (standard)
x	x	13	receptacle 6.3 to DIN 46 247
x	x	80	multipole connector (please specify type in plain text)
			(7) Compensating cable length AL in mm (500≤ AL ≤500000)
x	x	2500	2500mm (standard)
x	x	...	please specify in plain text (500mm steps)
			(8) Extra codes
x	x	000	no extra code
x	x	300	bayonet lock 14.5mm dia.
x	x	302	bayonet lock 15mm dia.
x	x	303	bayonet lock 16mm dia.
x	x	309	uninsulated assembly (thermocouple welded to tip)

	(1)		(2)		(3)		(4)		(5)		(6)		(7)		(8)	
Order code	[ ]	-	[ ]	-	[ ]	-	[ ]	-	[ ]	-	[ ]	-	[ ]	/	[ ]	,...[1]
Order example	901190/10	-	848	-	1042	-	6	-	175	-	11	-	2500	/	000	

1. List extra codes in sequence, separated by commas.

JUMO GmbH & Co. KG
Delivery address: Mackenrodtstraße 14, 36039 Fulda, Germany
Postal address: 36035 Fulda, Germany
Phone: +49 661 6003-0
Fax: +49 661 6003-607
E-mail: mail@jumo.net
Internet: www.jumo.net

JUMO Instrument Co. Ltd.
JUMO House
Temple Bank, Riverway
Harlow - Essex CM20 2DY, UK
Phone: +44 1279 63 55 33
Fax: +44 1279 63 52 62
E-mail: sales@jumo.co.uk
Internet: www.jumo.co.uk

JUMO Process Control, Inc.
8 Technology Boulevard
Canastota, NY 13032, USA
Phone: 315-697-JUMO
1-800-554-JUMO
Fax: 315-697-5867
E-mail: info@jumo.us
Internet: www.jumo.us

Order details: Push-in thermocouples with bayonet lock

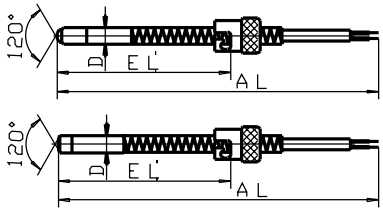

			(1) Basic version
		901190/30	Push-in thermocouple, protection tube / measuring tip (120°) stainless steel, Mat. Ref. 1.4571, bayonet lock 12mm dia.
		901190/40	Push-in thermocouple, protection tube stainless steel, Mat. Ref. 1.4571, measuring tip (120°) ceramic, KER 221, bayonet lock 12mm dia.
			(2) Operating temperature in °C / compensating cable
x	x	832	0 to 200°C / silicone
x		835	0 to 260°C / metal braiding
x		836	0 to 260°C / PTFE
	x	848	0 to 400°C / metal braiding
			(3) Measuring insert
x	x	1040	1 x Fe-Con J
x	x	1042	1 x Fe-Con L
x	x	1043	1 x NiCr-Ni K
x	x	2042	2 x Fe-Con L
x	x	2043	2 x NiCr-Ni K
			(4) Protection tube diameter D in mm
x	x	6	6mm
			(5) Fitting length EL in mm
x		175	33 - 175mm
	x	175	29 - 175mm
			(6) Compensating cable end
x	x	03	bare cable ends
x	x	11	ferrules to DIN 46 228 Part 4 (standard)
x	x	13	receptacle 6.3 to DIN 46 247
x	x	80	multipole connector (please specify type in plain text)
			(7) Compensating cable length AL in mm (500≤ AL ≤500000)
x	x	2500	2500mm (standard)
x	x	...	please specify in plain text (500mm steps)
			(8) Extra codes
x	x	000	no extra code
x	x	300	bayonet lock 14.5mm dia.
x	x	302	bayonet lock 15mm dia.
x	x	303	bayonet lock 16mm dia.
x	x	309	uninsulated assembly (thermocouple welded to tip)

	(1)		(2)		(3)		(4)		(5)		(6)		(7)		(8)	
Order code	[ ]	-	[ ]	-	[ ]	-	[ ]	-	[ ]	-	[ ]	-	[ ]	/	[ ]	,...[1]
Order example	901190/30	-	836	-	1042	-	6	-	175	-	11	-	2500	/	000	

1. List extra codes in sequence, separated by commas.

Note: Bayonet sockets, Data Sheet 90.9725

Stock versions

(1)		(2)		(3)		(4)		(5)		(6)		(7)		(8)	Sales No.
901190/10		848		1040		6		175		11		2500		000	90/00352190
901190/10	-	848	-	1040	-	8	-	175	-	11	-	2500	/	000	90/00371309
901190/10	-	848	-	1042	-	6	-	175	-	11	-	2500	/	000	90/00055784
901190/10	-	848	-	1042	-	8	-	175	-	11	-	2500	/	000	90/00055785
901190/20	-	848	-	1042	-	8	-	240	-	11	-	2500	/	309	90/00055792
901190/30	-	835	-	1042	-	6	-	175	-	13	-	2500	/	309	90/00055806
901190/40	-	848	-	1042	-	6	-	175	-	13	-	2500	/	000	90/00055804

JUMO GmbH & Co. KG
Delivery address: Mackenrodtstraße 14
36039 Fulda, Germany
Postal address: 36035 Fulda, Germany
Phone: +49 661 6003-0
Fax: +49 661 6003-607
E-mail: mail@jumo.net
Internet: www.jumo.net

JUMO Instrument Co. Ltd.
JUMO House
Temple Bank, Riverway
Harlow, Essex CM20 2DY, UK
Phone: +44 1279 635533
Fax: +44 1279 635262
E-mail: sales@jumo.co.uk
Internet: www.jumo.co.uk

JUMO Process Control, Inc.
6733 Myers Road
East Syracuse, NY 13057, USA
Phone: 315-437-5866
1-800-554-5866
Fax: 315-437-5860
E-mail: info.us@jumo.net
Internet: www.jumousa.com

Mineral-Insulated Thermocouples According to DIN 43710 and DIN EN 60584

- **For temperatures between -200 to +1200 °C**
- **Flexible sheath cable with vibration-resistant measuring insert**
- **Protection tube diameter as of 0.5 mm**
- **Quick response time**
- **Application-specific insertion length**

Due to their specific features, mineral-insulated thermocouples are used in chemical plants, power plants, pipelines, engine building, and test rigs. Inside the flexible and thin-walled sheathed cable, the thermowires are embedded in compressed and fire-resistant magnesium oxide.

The good thermal transfer between the sheath and the thermocouple enables short response times ($t_{0.5}$ as of 0.15 s) and excellent measuring accuracy. The vibration-resistant construction guarantees a long operating life. The smallest bending radius is 5 times the outer diameter. With a diameter of 0.5 to 2.0 mm, the minimum insertion length (EL) is ≥ 50 mm; with a diameter of 3.0 to 6.0 mm the EL is ≥ 100 mm.
The thermocouples are designed to be insulated from the sheath as standard. The measuring insert is equipped with thermocouples (elements) according to DIN EN 60584 and/or DIN 43710. Versions with two thermocouples are also possible.

Test pressure: check for leaks at the measuring point at 40 bar (helium).

Leakage resistance: thermocouple against sheath at room temperature and lengths < 1 m 200 MΩ, with lengths ≥ 1 m 200 MΩ × m.

Technical data

Terminal head	Form B, diecast aluminum, M20 × 1.5; IP65, ambient temperature -40 to +100 °C Form BUZ, diecast aluminum, M20 × 1.5; IP65, ambient temperature -40 to +100 °C Form J, diecast aluminum, M16 × 1.5; IP65, ambient temperature -40 to +100 °C Caution: reduced ambient temperature when using transmitters
Connection	Cable ends stripped bare; alternatively available with ferrules, plug-in sleeves, or multi-pole electrical connectors (e.g. thermal-voltage-free connector)
Compensating cable	Silicone, ambient temperature -50 to +180 °C PTFE, ambient temperature 190 to +260 °C Metal braiding, ambient temperature -20 to +350 °C
Process connection	Thread, stainless steel 1.4571
Protection tube	Stainless steel 1.4541, thermocouple type "L" and "J" Inconel 2.4816 (Inconel 600), thermocouple type "K" and "N"
Adapter sleeve (end closure)	As standard, the adapter sleeve (end closure) is designed up to 120 °C; it is available up to 300 °C upon request.
Measuring insert	Insulated construction: 1× Fe-CuNi "J", DIN EN 60584, class 2, operating temperature -200 to +800 °C 1× Fe-CuNi "L", DIN 43710, class 2, operating temperature -200 to +800 °C 1× NiCr-Ni "K", DIN EN 60584, class 2, operating temperature -200 to +1200 °C 1× NiCrSi-NiSi "N", DIN EN 60584, class 2, operating temperature -200 to +1200 °C 2× Fe-CuNi "L", DIN 43710, class 2, operating temperature -200 to +800 °C 2× NiCr-Ni "K", DIN EN 60584, class 2, operating temperature -200 to +1200 °C 2× NiCrSi-NiSi "N", DIN EN 60584, class 2, operating temperature -200 to +1200 °C
Response times	In water with 0.4 m/s / in air with 2 m/s Ø 0.5 mm: water $t_{0.5}$ = 0.15 s, $t_{0.9}$ = 0.30 s/air $t_{0.5}$ = 3.5 s, $t_{0.9}$ = 8.0 s Ø 1.0 mm: water $t_{0.5}$ = 0.20 s, $t_{0.9}$ = 0.60 s/air $t_{0.5}$ = 7.5 s, $t_{0.9}$ = 17.0 s Ø 1.5 mm: water $t_{0.5}$ = 0.40 s, $t_{0.9}$ = 0.90 s/air $t_{0.5}$ = 10.0 s, $t_{0.9}$ = 25.0 s Ø 2.0 mm: water $t_{0.5}$ = 0.80 s, $t_{0.9}$ = 2.60 s/air $t_{0.5}$ = 13.0 s, $t_{0.9}$ = 34.0 s Ø 3.0 mm: water $t_{0.5}$ = 1.00 s, $t_{0.9}$ = 2.80 s/air $t_{0.5}$ = 22.0 s, $t_{0.9}$ = 64.0 s Ø 4.5 mm: water $t_{0.5}$ = 2.50 s, $t_{0.9}$ = 6.50 s/air $t_{0.5}$ = 34.0 s, $t_{0.9}$ = 113.0 s Ø 6.0 mm: water $t_{0.5}$ = 3.00 s, $t_{0.9}$ = 9.00 s/air $t_{0.5}$ = 55.0 s, $t_{0.9}$ = 170.0 s
Transmitter	Programmable transmitter, 4 to 20 mA / 20 to 4 mA output, data sheet 707010 programmable transmitter, 4 to 20 mA / 20 to 4 mA and HART® interface output, data sheet 707010

JUMO GmbH & Co. KG
Delivery address: Mackenrodtstraße 14
36039 Fulda, Germany
Postal address: 36035 Fulda, Germany
Phone: +49 661 6003-0
Fax: +49 661 6003-607
E-mail: mail@jumo.net
Internet: www.jumo.net

JUMO Instrument Co. Ltd.
JUMO House
Temple Bank, Riverway
Harlow, Essex CM20 2DY, UK
Phone: +44 1279 635533
Fax: +44 1279 635262
E-mail: sales@jumo.co.uk
Internet: www.jumo.co.uk

JUMO Process Control, Inc.
6733 Myers Road
East Syracuse, NY 13057, USA
Phone: 315-437-5866
1-800-554-5866
Fax: 315-437-5860
E-mail: info.us@jumo.net
Internet: www.jumousa.com

Lead wire resistance in Ω/m at 20 °C for mineral-insulated thermocouples

Diameter D in mm	1 element resistance in Ω/m	2 elements resistance in Ω/m
Thermocouple Fe-CuNi "L"		
6.0	0.66	0.85
4.5	1.40	1.80
3.0	2.70	3.50
2.0	5.00	-
1.5	12.00	-
1.0	21.50	-
Thermocouple Fe-CuNi "J"		
6.0	0.54	-
3.0	2.10	-
2.0	8.60	-
1.5	15.00	-
1.0	34.00	-
Thermocouple NiCr-Ni "K"		
6.0	0.88	2.70
4.5	1.56	4.80
3.0	3.50	11.00
2.0	7.90	25.00
1.5	14.00	-
1.0	32.00	-
0.5	126.00	-
Thermocouple NiCrSi-NiSi "N"		
6.0	1.81	1.68
3.0	5.98	7.00

JUMO GmbH & Co. KG
Delivery address: Mackenrodtstraße 14
36039 Fulda, Germany
Postal address: 36035 Fulda, Germany
Phone: +49 661 6003-0
Fax: +49 661 6003-607
E-mail: mail@jumo.net
Internet: www.jumo.net

JUMO Instrument Co. Ltd.
JUMO House
Temple Bank, Riverway
Harlow, Essex CM20 2DY, UK
Phone: +44 1279 635533
Fax: +44 1279 635262
E-mail: sales@jumo.co.uk
Internet: www.jumo.co.uk

JUMO Process Control, Inc.
6733 Myers Road
East Syracuse, NY 13057, USA
Phone: 315-437-5866
1-800-554-5866
Fax: 315-437-5860
E-mail: info.us@jumo.net
Internet: www.jumousa.com

Dimensions

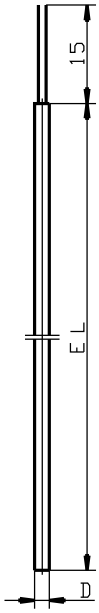

Basic type 901210/10

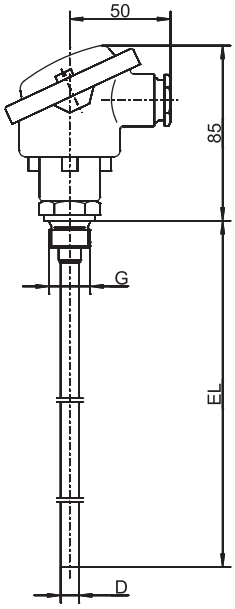

Basic type 901220/40

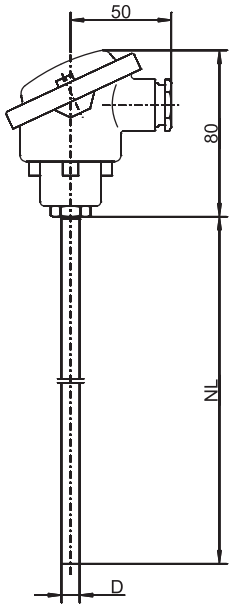

Basic type 901220/41

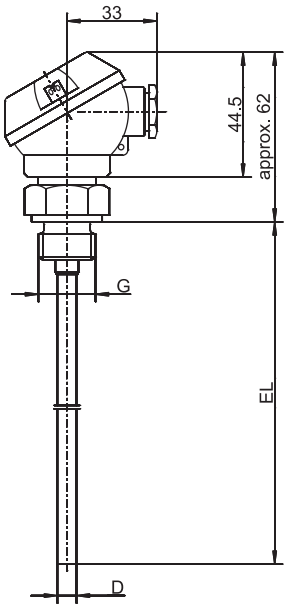

Basic type 901230/40

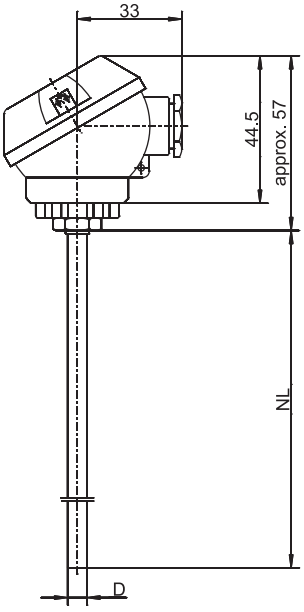

Basic type 901230/41

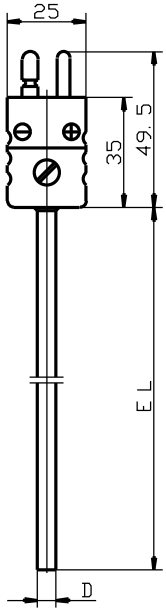

Basic type 901240/20

JUMO GmbH & Co. KG
Delivery address: Mackenrodtstraße 14
36039 Fulda, Germany
Postal address: 36035 Fulda, Germany
Phone: +49 661 6003-0
Fax: +49 661 6003-607
E-mail: mail@jumo.net
Internet: www.jumo.net

JUMO Instrument Co. Ltd.
JUMO House
Temple Bank, Riverway
Harlow, Essex CM20 2DY, UK
Phone: +44 1279 635533
Fax: +44 1279 635262
E-mail: sales@jumo.co.uk
Internet: www.jumo.co.uk

JUMO Process Control, Inc.
6733 Myers Road
East Syracuse, NY 13057, USA
Phone: 315-437-5866
1-800-554-5866
Fax: 315-437-5860
E-mail: info.us@jumo.net
Internet: www.jumousa.com

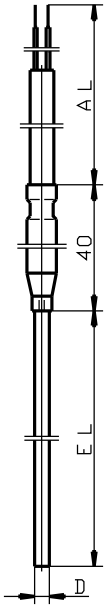

Basic type 901250/3x

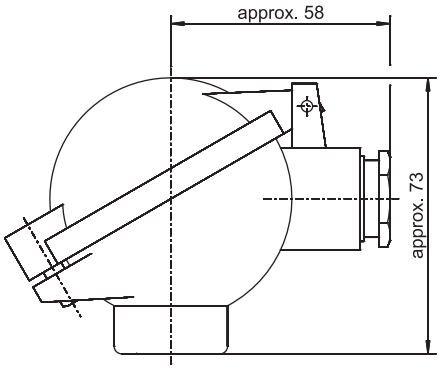

Terminal head form BUZ
extra code 320

JUMO GmbH & Co. KG
Delivery address: Mackenrodtstraße 14
36039 Fulda, Germany
Postal address: 36035 Fulda, Germany
Phone: +49 661 6003-0
Fax: +49 661 6003-607
E-mail: mail@jumo.net
Internet: www.jumo.net

JUMO Instrument Co. Ltd.
JUMO House
Temple Bank, Riverway
Harlow, Essex CM20 2DY, UK
Phone: +44 1279 635533
Fax: +44 1279 635262
E-mail: sales@jumo.co.uk
Internet: www.jumo.co.uk

JUMO Process Control, Inc.
6733 Myers Road
East Syracuse, NY 13057, USA
Phone: 315-437-5866
1-800-554-5866
Fax: 315-437-5860
E-mail: info.us@jumo.net
Internet: www.jumousa.com

Order details: Mineral-insulated thermocouples according to DIN 43710 and DIN EN 60584

(1) Basic type

901210/10 — Mineral-insulated thermocouples with bare connection wires

901240/20 — Mineral-insulated thermocouple with thermal-voltage-free standard tab-connector

			(2) Measuring insert / operating temperature in °C
x	x	1040	1× Fe-CuNi "J", operating temperature -200 to +800 °C, sheath material no. 1.4541
x	x	1042	1× Fe-CuNi "L", operating temperature -200 to +800 °C, sheath material no. 1.4541
x	x	1043	1× NiCr-Ni "K", operating temperature -200 to +1200 °C, sheath material no. 2.4816
x		1048	1× NiCrSi-NiSi "N", operating temperature -200 to +1200 °C, sheath material no. 2.4816, D = 3 and 6 mm
x		2042	2× Fe-CuNi "L", operating temperature -200 to +800 °C, sheath material no. 1.4541
x		2043	2× NiCr-Ni "K", operating temperature -200 to +1200 °C, sheath material no. 2.4816
x		2048	2× NiCrSi-NiSi "N", operating temperature -200 to +1200 °C, sheath material 2.4816, D = 3 and 6 mm
			(3) Protection tube diameter D in mm
	x	0.5	Ø 0.5 mm, only in connection with measuring insert 1× NiCr-Ni "K"
x	x	1	Ø 1 mm
x	x	1.5	Ø 1.5 mm
x	x	2	Ø 2 mm
x	x	3	Ø 3 mm
x	x	4.5	Ø 4.5 mm
x	x	6	Ø 6 mm
			(4) Insertion length EL in mm (50 to 50000 mm)
x	x	100	100 mm
x	x	200	200 mm
x	x	300	300 mm
x	x	400	400 mm
x	x	500	500 mm
x	x	...	Please specify in plain text (50 mm steps)
			(5) Extra codes
x	x	000	Without
x	x	309	Uninsulated construction (element welded to the base)

	(1)		(2)		(3)		(4)		(5)
Order code		-		-		-		/	
Order example	901210/10	-	1042	-	3	-	200	/	000

JUMO GmbH & Co. KG
Delivery address: Mackenrodtstraße 14
36039 Fulda, Germany
Postal address: 36035 Fulda, Germany
Phone: +49 661 6003-0
Fax: +49 661 6003-607
E-mail: mail@jumo.net
Internet: www.jumo.net

JUMO Instrument Co. Ltd.
JUMO House
Temple Bank, Riverway
Harlow, Essex CM20 2DY, UK
Phone: +44 1279 635533
Fax: +44 1279 635262
E-mail: sales@jumo.co.uk
Internet: www.jumo.co.uk

JUMO Process Control, Inc.
6733 Myers Road
East Syracuse, NY 13057, USA
Phone: 315-437-5866
1-800-554-5866
Fax: 315-437-5860
E-mail: info.us@jumo.net
Internet: www.jumousa.com

Order details: Mineral-insulated thermocouples according to DIN 43710 and DIN EN 60584

			(1) Basic type
		901220/40	Screw-in mineral-insulated thermocouple with terminal head, form B
		901220/41	Push-in mineral-insulated thermocouple with terminal head, form B
			(2) Measuring insert / operating temperature in °C
x	x	1040	1× Fe-CuNi "J", operating temperature -200 to +800 °C, sheath material no. 1.4541
x	x	1042	1× Fe-CuNi "L", operating temperature -200 to +800 °C, sheath material no. 1.4541
x	x	1043	1× NiCr-Ni "K", operating temperature -200 to +1200 °C, sheath material no. 2.4816
x	x	1048	1× NiCrSi-NiSi "N", operating temperature -200 to +1200 °C, sheath material no. 2.4816
x	x	2042	2× Fe-CuNi "L", operating temperature -200 to +800 °C, sheath material no. 1.4541
x	x	2043	2× NiCr-Ni "K", operating temperature -200 to +1200 °C, sheath material no. 2.4816
x	x	2048	2× NiCrSi-NiSi "N", operating temperature -200 to +1200 °C, sheath material no. 2.4816
			(3) Protection tube diameter D in mm
x	x	3	Ø 3 mm
x	x	4.5	Ø 4.5 mm (not for measuring insert type "N")
x	x	6	Ø 6 mm
			(4) Insertion length EL/NL in mm (50 to 50000 mm)
x	x	100	100 mm
x	x	200	200 mm
x	x	300	300 mm
x	x	400	400 mm
x	x	500	500 mm
x	x	...	Please specify in plain text (50 mm steps)
			(5) Process connection
	x	000	Without
x		103	Screw connection G 3/8
x		104	Screw connection G 1/2
			(6) Extra codes
x	x	000	Without
x	x	309	Uninsulated construction (element welded to the base)
x	x	320	Terminal head form BUZ
x	x	331	1× programmable transmitter, 4 to 20 mA / 20 to 4 mA output, data sheet 707010
x	x	336	1× programmable transmitter, 4 to 20 mA / 20 to 4 mA and HART® interface output, data sheet 707010

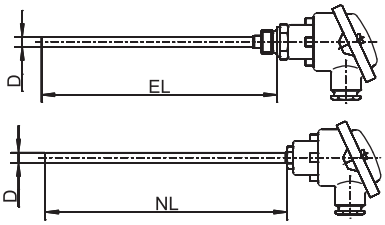

	(1)		(2)		(3)		(4)		(5)		(6)	
Order code	[ ]	-	[ ]	-	[ ]	-	[ ]	-	[ ]	/	[ ]	, ...[a]
Order example	901220/40	-	1040	-	3	-	100	-	104	/	000	

[a] List extra codes in sequence, separated by commas.

JUMO GmbH & Co. KG
Delivery address: Mackenrodtstraße 14
36039 Fulda, Germany
Postal address: 36035 Fulda, Germany
Phone: +49 661 6003-0
Fax: +49 661 6003-607
E-mail: mail@jumo.net
Internet: www.jumo.net

JUMO Instrument Co. Ltd.
JUMO House
Temple Bank, Riverway
Harlow, Essex CM20 2DY, UK
Phone: +44 1279 635533
Fax: +44 1279 635262
E-mail: sales@jumo.co.uk
Internet: www.jumo.co.uk

JUMO Process Control, Inc.
6733 Myers Road
East Syracuse, NY 13057, USA
Phone: 315-437-5866
1-800-554-5866
Fax: 315-437-5860
E-mail: info.us@jumo.net
Internet: www.jumousa.com

Accessories

Article	Part no.
Pipe screw connection M8 × 1 stainless steel, clamping ring stainless steel for protection tube diameter D = 3 mm	00080810
Pipe screw connection M8 × 1 stainless steel, clamping ring PTFE for protection tube diameter D = 3 mm	00049709
Pipe screw connection M8 × 1 steel, clamping ring PTFE for protection tube diameter D = 4.5 mm	00049704
Pipe screw connection M8 × 1 stainless steel, clamping ring PTFE for protection tube diameter D = 4.5 mm	00049710
Pipe screw connection M10 × 1 stainless steel, clamping ring stainless steel for protection tube diameter D = 6 mm	00065416
Pipe screw connection G 1/4 stainless steel, clamping ring stainless steel for protection tube diameter D = 6 mm	00080811
Pipe screw connection G 3/8 steel, clamping ring steel for protection tube diameter D = 6 mm	00057945
Pipe screw connection G 3/8 stainless steel, clamping ring stainless steel for protection tube diameter D = 6 mm	00317966
Pipe screw connection G 1/2 stainless steel, clamping ring stainless steel for protection tube diameter D = 6 mm	00305445
Pipe screw connection 1/2-14NPT stainless steel, clamping ring stainless steel for protection tube diameter D = 6 mm	00444210
Sheet steel flange for protection tube diameter D = 6 mm	00065042

JUMO GmbH & Co. KG
Delivery address: Mackenrodtstraße 14
36039 Fulda, Germany
Postal address: 36035 Fulda, Germany
Phone: +49 661 6003-0
Fax: +49 661 6003-607
E-mail: mail@jumo.net
Internet: www.jumo.net

JUMO Instrument Co. Ltd.
JUMO House
Temple Bank, Riverway
Harlow, Essex CM20 2DY, UK
Phone: +44 1279 635533
Fax: +44 1279 635262
E-mail: sales@jumo.co.uk
Internet: www.jumo.co.uk

JUMO Process Control, Inc.
6733 Myers Road
East Syracuse, NY 13057, USA
Phone: 315-437-5866
1-800-554-5866
Fax: 315-437-5860
E-mail: info.us@jumo.net
Internet: www.jumousa.com

Order details: Mineral-insulated thermocouples according to DIN 43710 and DIN EN 60584

(1) Basic type

901230/40 — Screw-in mineral-insulated thermocouple with terminal head, form J

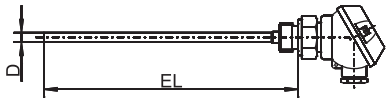

901230/41 — Push-in mineral-insulated thermocouple with terminal head, form J

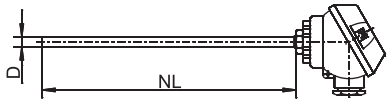

			(2) Measuring insert / operating temperature in °C
x	x	1040	1× Fe-CuNi "J", operating temperature -200 to +800 °C, sheath material no. 1.4541
x	x	1042	1× Fe-CuNi "L", operating temperature -200 to +800 °C, sheath material no. 1.4541
x	x	1043	1× NiCr-Ni "K", operating temperature -200 to +1200 °C, sheath material no. 2.4816
x	x	1048	1× NiCrSi-NiSi "N", operating temperature -200 to +1200 °C, sheath material no. 2.4816
x	x	2042	2× Fe-CuNi "L", operating temperature -200 to +800 °C, sheath material no. 1.4541
x	x	2043	2× NiCr-Ni "K", operating temperature -200 to +1200 °C, sheath material no. 2.4816
x	x	2048	2× NiCrSi-NiSi "N", operating temperature -200 to +1200 °C, sheath material no. 2.4816
			(3) Protection tube diameter D in mm
x	x	3	Ø 3 mm
x	x	4.5	Ø 4.5 mm (not for measuring insert type "N")
x	x	6	Ø 6 mm
			(4) Insertion length EL/NL in mm (50 to 50000 mm)
x	x	100	100 mm
x	x	200	200 mm
x	x	300	300 mm
x	x	400	400 mm
x	x	500	500 mm
x	x	...	Please specify in plain text (50 mm steps)
			(5) Process connection
	x	000	Without
x		103	Screw connection G 3/8
x		104	Screw connection G 1/2
			(6) Extra codes
x	x	000	Without
x	x	309	Uninsulated construction (element welded to the base)

	(1)		(2)		(3)		(4)		(5)		(6)
Order code		-		-		-		-		/	
Order example	901230/40	-	1040	-	3	-	100	-	104	/	000

JUMO GmbH & Co. KG
Delivery address: Mackenrodtstraße 14
36039 Fulda, Germany
Postal address: 36035 Fulda, Germany
Phone: +49 661 6003-0
Fax: +49 661 6003-607
E-mail: mail@jumo.net
Internet: www.jumo.net

JUMO Instrument Co. Ltd.
JUMO House
Temple Bank, Riverway
Harlow, Essex CM20 2DY, UK
Phone: +44 1279 635533
Fax: +44 1279 635262
E-mail: sales@jumo.co.uk
Internet: www.jumo.co.uk

JUMO Process Control, Inc.
6733 Myers Road
East Syracuse, NY 13057, USA
Phone: 315-437-5866
1-800-554-5866
Fax: 315-437-5860
E-mail: info.us@jumo.net
Internet: www.jumousa.com

Accessories

Article	Part no.
Pipe screw connection M8 × 1 stainless steel, clamping ring stainless steel for protection tube diameter D = 3 mm	00080810
Pipe screw connection M8 × 1 stainless steel, clamping ring PTFE for protection tube diameter D = 3 mm	00049709
Pipe screw connection M8 × 1 steel, clamping ring PTFE for protection tube diameter D = 4.5 mm	00049704
Pipe screw connection M8 × 1 stainless steel, clamping ring PTFE for protection tube diameter D = 4.5 mm	00049710
Pipe screw connection M10 × 1 stainless steel, clamping ring stainless steel for protection tube diameter D = 6 mm	00065416
Pipe screw connection G 1/4 stainless steel, clamping ring stainless steel for protection tube diameter D = 6 mm	00080811
Pipe screw connection G 3/8 steel, clamping ring steel for protection tube diameter D = 6 mm	00057945
Pipe screw connection G 3/8 stainless steel, clamping ring stainless steel for protection tube diameter D = 6 mm	00317966
Pipe screw connection G 1/2 stainless steel, clamping ring stainless steel for protection tube diameter D = 6 mm	00305445
Pipe screw connection 1/2-14NPT stainless steel, clamping ring stainless steel for protection tube diameter D = 6 mm	00444210
Sheet steel flange for protection tube diameter D = 6 mm	00065042

JUMO GmbH & Co. KG
Delivery address: Mackenrodtstraße 14
36039 Fulda, Germany
Postal address: 36035 Fulda, Germany
Phone: +49 661 6003-0
Fax: +49 661 6003-607
E-mail: mail@jumo.net
Internet: www.jumo.net

JUMO Instrument Co. Ltd.
JUMO House
Temple Bank, Riverway
Harlow, Essex CM20 2DY, UK
Phone: +44 1279 635533
Fax: +44 1279 635262
E-mail: sales@jumo.co.uk
Internet: www.jumo.co.uk

JUMO Process Control, Inc.
6733 Myers Road
East Syracuse, NY 13057, USA
Phone: 315-437-5866
1-800-554-5866
Fax: 315-437-5860
E-mail: info.us@jumo.net
Internet: www.jumousa.com

Order details: Mineral-insulated thermocouples according to DIN 43710 and DIN EN 60584

				(1) Basic type
			901250/32	Mineral-insulated thermocouple with silicone-insulated compensating cable
			901250/33	Mineral-insulated thermocouple with PTFE-insulated compensating cable
			901250/34	Mineral-insulated thermocouple with compensation cable that is metal-braided and insulated with glass-fiber
				(2) Measuring insert / operating temperature in °C
x	x	x	1040	1× Fe-CuNi "J", operating temperature -200 to +800 °C, sheath material no. 1.4541
x	x	x	1042	1× Fe-CuNi "L", operating temperature -200 to +800 °C, sheath material no. 1.4541
x	x	x	1043	1× NiCr-Ni "K", operating temperature -200 to +1200 °C, sheath material no. 2.4816
x		x	2042	2× Fe-CuNi "L", operating temperature -200 to +800 °C, sheath material no. 1.4541
x		x	2043	2× NiCr-Ni "K", operating temperature -200 to +1200 °C, sheath material no. 2.4816
				(3) Protection tube diameter D in mm
x	x	x	0.5	Ø 0.5 mm
x	x	x	1	Ø 1 mm
x	x	x	1.5	Ø 1.5 mm
x	x	x	2	Ø 2 mm
x	x	x	3	Ø 3 mm
x	x	x	4.5	Ø 4.5 mm
x	x	x	6	Ø 6 mm
				(4) Insertion length EL in mm (50 to 50000 mm)
x	x	x	100	100 mm
x	x	x	200	200 mm
x	x	x	300	300 mm
x	x	x	400	400 mm
x	x	x	500	500 mm
x	x	x	...	Please specify in plain text (50 mm steps)
				(5) Compensating cable end
x	x	x	11	Ferrules according to DIN 46228 part 4 (standard)
x	x	x	80	Multi-pole electrical connector (specify type in plain text)
				(6) Compensating cable length AL in mm (500 to 500000 mm)
x	x	x	2500	2500 mm (standard)
x	x	x	...	Please specify in plain text (500 mm steps)
				(7) Extra codes
x	x		000	Without
x	x		309	Uninsulated construction (element welded to the base)
x	x		317	Compensating cable shielded
	x	x	855	Adapter sleeve (end closure) 300 °C

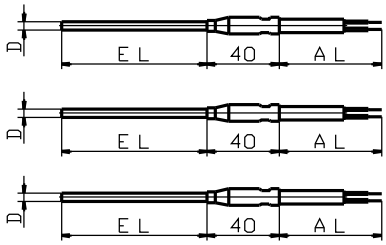

	(1)		(2)		(3)		(4)		(5)		(6)		(7)	
Order code	[ ]	-	[ ]	-	[ ]	-	[ ]	-	[ ]	-	[ ]	/	[ ]	, ...[a]
Order example	901250/32	-	1042	-	3	-	200	-	11	-	2500	/	000	

[a] List extra codes in sequence, separated by commas.

JUMO GmbH & Co. KG
Delivery address: Mackenrodtstraße 14
36039 Fulda, Germany
Postal address: 36035 Fulda, Germany
Phone: +49 661 6003-0
Fax: +49 661 6003-607
E-mail: mail@jumo.net
Internet: www.jumo.net

JUMO Instrument Co. Ltd.
JUMO House
Temple Bank, Riverway
Harlow, Essex CM20 2DY, UK
Phone: +44 1279 635533
Fax: +44 1279 635262
E-mail: sales@jumo.co.uk
Internet: www.jumo.co.uk

JUMO Process Control, Inc.
6733 Myers Road
East Syracuse, NY 13057, USA
Phone: 315-437-5866
1-800-554-5866
Fax: 315-437-5860
E-mail: info.us@jumo.net
Internet: www.jumousa.com

Stock versions

(1)		(2)		(3)		(4)		(5)		(6)		(7)	Part no.
901250/32	-	1042	-	3	-	100	-	11	-	2500	/	000	00056809
901250/32	-	1042	-	3	-	200	-	11	-	2500	/	000	00068433
901250/32	-	1042	-	1.5	-	100	-	11	-	2500	/	000	00056811
901250/32	-	1042	-	1.5	-	200	-	11	-	2500	/	000	00068438
901250/32	-	1043	-	6	-	100	-	11	-	2500	/	000	00056812
901250/32	-	1043	-	6	-	200	-	11	-	2500	/	000	00068427
901250/32	-	1043	-	3	-	100	-	11	-	2500	/	000	00056813
901250/32	-	1043	-	3	-	200	-	11	-	2500	/	000	00068441
901250/32	-	1043	-	3	-	300	-	11	-	2500	/	000	00068442
901250/32	-	1043	-	3	-	500	-	11	-	2500	/	000	00068443
901250/32	-	1043	-	1.5	-	100	-	11	-	2500	/	000	00049205
901250/32	-	1043	-	1.5	-	200	-	11	-	2500	/	000	00068436
901250/32	-	1043	-	1.5	-	500	-	11	-	2500	/	000	00068437
901250/32	-	1043	-	0.5	-	100	-	11	-	2500	/	000	00066345

Stock versions

(1)		(2)		(3)		(4)		(5)		(6)	Part no.
901230/40	-	1043	-	6	-	200	-	104	/	000	00068430
901230/40	-	1043	-	6	-	300	-	104	/	000	00068431

JUMO GmbH & Co. KG
Delivery address: Mackenrodtstraße 14,
36039 Fulda, Germany
Postal address: 36035 Fulda, Germany
Phone: +49 661 6003-0
Fax: +49 661 6003-607
E-mail: mail@jumo.net
Internet: www.jumo.net

JUMO Instrument Co. Ltd.
JUMO House
Temple Bank, Riverway
Harlow - Essex CM20 2DY, UK
Phone: +44 1279 63 55 33
Fax: +44 1279 63 52 62
E-mail: sales@jumo.co.uk
Internet: www.jumo.co.uk

JUMO Process Control, Inc.
8 Technology Boulevard
Canastota, NY 13032, USA
Phone: 315-697-JUMO
1-800-554-JUMO
Fax: 315-697-5867
E-mail: info@jumo.us
Internet: www.jumo.us

JUMO FOODtemp

Thermocouple Insertion Probes

- **For temperatures from -100 ... +260°C**
- **Steam-tight**
- **High mechanical strength**
- **For use in the food industry**
- **Available with multiple measurement points**

Due to their special construction, these robust, steam-tight thermocouple insertion probes are especially suited to smoking, cooking, boiling, and baking processes in all food processing and food preservation applications.
The stainless steel thermocouple is available with a concentric or oblique insertion tip.
All versions have a highly vibration resistant design. The handle is oil-resistant and acid-proof.
The measurement insert is equipped with thermal pairs NiCr-Ni according to type K thermocouples per DIN EN 60 584, class 1.

Technical Data

Cable termination	Stripped wire ends, with ferrules, also available with contacts or multi-pole connectors
Cable	PTFE, permissible ambient temperature range -100 ... +260°C
Handle	PTFE handle, ambient temperature max. +260°C PEEK handle, ambient temperature max. +260°C
Probe	Stainless steel 1.4571 (equivalent to SS 316 Ti), Ø 4mm, Ø 4.5mm
Probe tip	Concentric, angled at approx. 25° oblique, angled at 45°
Measurement insert	3x NiCr-Ni Type K, DIN EN 60 584, class 1, operating temperature -100 ... +260°C 4 x NiCr-Ni Type K, DIN EN 60 584, cl. 1, operating temperature -100 ... +260°C 5 x NiCr-Ni Type K, DIN EN 60 584, cl. 1, operating temperature -100 ... +260°C
Protection class	IP67

JUMO GmbH & Co. KG
Delivery address: Mackenrodtstraße 14,
36039 Fulda, Germany
Postal address: 36035 Fulda, Germany
Phone: +49 661 6003-0
Fax: +49 661 6003-607
E-mail: mail@jumo.net
Internet: www.jumo.net

JUMO Instrument Co. Ltd.
JUMO House
Temple Bank, Riverway
Harlow - Essex CM20 2DY, UK
Phone: +44 1279 63 55 33
Fax: +44 1279 63 52 62
E-mail: sales@jumo.co.uk
Internet: www.jumo.co.uk

JUMO Process Control, Inc.
8 Technology Boulevard
Canastota, NY 13032, USA
Phone: 315-697-JUMO
1-800-554-JUMO
Fax: 315-697-5867
E-mail: info@jumo.us
Internet: www.jumo.us

Dimensions

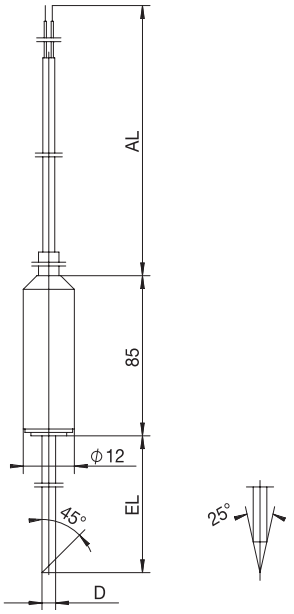

Type 901350/33

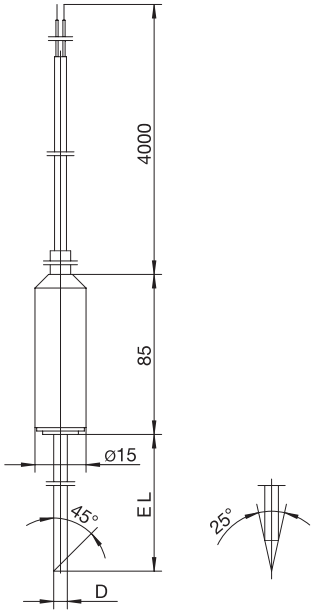

Type 901350/63

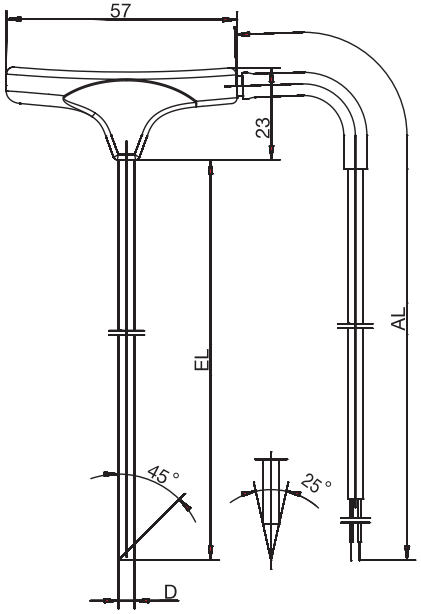

Type 901350/83

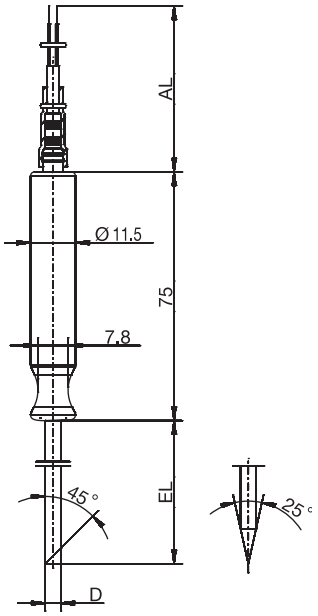

Type 901350/84

JUMO GmbH & Co. KG
Delivery address: Mackenrodtstraße 14, 36039 Fulda, Germany
Postal address: 36035 Fulda, Germany
Phone: +49 661 6003-0
Fax: +49 661 6003-607
E-mail: mail@jumo.net
Internet: www.jumo.net

JUMO Instrument Co. Ltd.
JUMO House
Temple Bank, Riverway
Harlow - Essex CM20 2DY, UK
Phone: +44 1279 63 55 33
Fax: +44 1279 63 52 62
E-mail: sales@jumo.co.uk
Internet: www.jumo.co.uk

JUMO Process Control, Inc.
8 Technology Boulevard
Canastota, NY 13032, USA
Phone: 315-697-JUMO
1-800-554-JUMO
Fax: 315-697-5867
E-mail: info@jumo.us
Internet: www.jumo.us

Order details: Thermocouple insertion probes

(1) Basic type

901350/33	with multiple measurement points, PTFE handle Ø 12mm, and PTFE cable
901350/63	with multiple measurement points, PTFE handle Ø 15mm, and PTFE cable
901350/83	with multiple measurement points, PEEK handle, and PTFE cable
901350/84	with multiple measurement points, PEEK handle, and PTFE cable

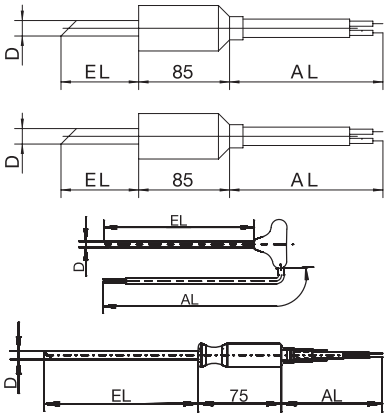

					(2) Operating temperature range in °C
x	x	x	x	261	-100 ... +260°C
					(3) Measurement insert (distributed along probe length EL)
x	x	x	x	3043	3x NiCr-Ni Type K
x	x	x	x	4043	4x NiCr-Ni Type K
x	x			5043	5x NiCr-Ni Type K (only in combination with probe diameter 4.5mm)
					(4) Probe diameter D in mm
x	x	x	x	4	Ø 4mm
x	x			4,5	Ø 4.5mm
					(5) Insertion length EL in mm
x	x	x	x	100	100mm (Standard)
x	x	x	x	150	150mm
x	x			200	200mm
					(6) Insertion tip
x	x	x	x	2	Concentric, angled at approx. 25°
x	x	x	x	3	Oblique, angled at 45° (standard)
					(7) Cable termination
x	x	x	x	03	stripped wires
x	x	x	x	11	Ferrules per DIN 46 228 Part 4 (Standard)
x	x	x	x	80	Multi-pole connector (specify type in plain text)
					(8) Cable length AL in mm (500 ≤ AL ≤ 500000)
x	x	x	x	4000	4000mm (Standard)
x	x	x	x	...	Please specify in plain text (500mm steps)

	(1)		(2)		(3)		(4)		(5)		(6)		(7)		(8)
Order code		-		-		-		-		-		-		-	
Order example	901350/33	-	261	-	3043	-	4	-	100	-	2	-	03	-	4000

JUMO GmbH & Co. KG
Delivery address: Mackenrodtstraße 14, 36039 Fulda, Germany
Postal address: 36035 Fulda, Germany
Phone: +49 661 6003-0
Fax: +49 661 6003-607
e-mail: mail@jumo.net
Internet: www.jumo.net

JUMO Instrument Co. Ltd.
JUMO House
Temple Bank, Riverway
Harlow, Essex CM 20 2TT, UK
Phone: +44 1279 635533
Fax: +44 1279 635262
e-mail: sales@jumo.co.uk
Internet: www.jumo.co.uk

JUMO Process Control, Inc.
8 Technology Boulevard
Canastota, NY 13032, USA
Phone: 315-697-JUMO
1-800-554-JUMO
Fax: 315-697-5867
e-mail: info@jumo.us
Internet: www.jumo.us

Construction and application of resistance thermometers

Temperature-dependent resistance

The variation of the electrical resistance of metals with temperature is very often employed for the electrical measurement of temperature. Since the electrical resistance increases with increasing temperature, we speak of a **positive temperature coefficient** or **PTC** (in platinum temperature sensors, for example).

In order to employ this effect for temperature measurement, the electrical resistance of the metal must vary in a reproducible manner depending on temperature. The characteristics of the metal must not change during operation, as this would introduce measurement errors. The temperature coefficient should be as independent as possible of temperature, pressure and chemical effects.

Standardized platinum temperature sensors

Platinum has established itself as the resistance material of choice in industrial instrumentation. Its advantages include high chemical stability, relatively easy workability (especially in wire manufacture), its availability in highly pure form, and the good reproducibility of its electrical properties. In order to ensure universal interchangeability, these properties are defined in the standard EN 60 751.

This standard lays down the electrical resistance and the permitted tolerances at different temperatures.

Additional definitions cover the nominal value of the temperature sensor and the temperature range. The calculation makes a distinction between the two temperature ranges -200 to 0°C and 0 to 850°C.

The range from -200 to 0°C is covered by the third-order polynomial:

$$R(t) = R_0(1 + A \times t + B \times t^2 + C \times (t - 100°C) \times t^3)$$

A second-order polynomial applies to the range 0 to 850°C …

$$R(t) = R_0(1 + A \times t + B \times t^2)$$

…with the coefficients:

$$A = 3{,}9083 \times 10^{-3}\,°C^{-1}$$
$$B = -5.775 \times 10^{-7}\,°C^{-2}$$
$$C = -4{,}183 \times 10^{-12}\,°C^{-4}$$

The term R_0 is referred to as the **nominal value,** and represents the resistance at 0°C.

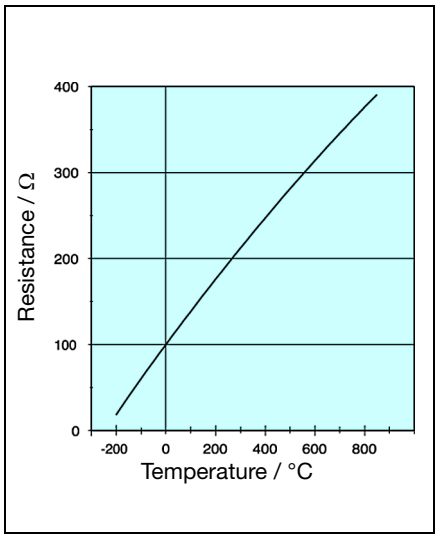

Fig. 1: Pt100 characteristic

According to EN 60 751, the nominal value is 100.000 Ω at 0°C. We therefore speak of a Pt100 temperature sensor.

Temperature sensors with nominal values of 500 and 1000Ω are also available. Their advantage is a higher sensitivity, i.e. a larger variation of their resistance with temperature.

The resistance change in the temperature range up to 100°C is approximately:
0.4Ω/°C for Pt100 temperature sensors
2.0Ω/°C for Pt500 temperature sensors
4.0Ω/°C for Pt1000 temperature sensors

As an additional parameter, the standard defines a mean temperature coefficient between 0°C and 100°C. This represents the average change in resistance, referred to the nominal value at 0°C:

$$\alpha = \frac{R_{100} - R_0}{R_0 \times 100°C} = 3{,}850 \times 10^{-3}\,°C^{-1}$$

R_0 and R_{100} are the resistances at the temperatures 0°C and 100°C respectively.

Calculating the temperature from the resistance

In its application as a thermometer, the resistance of the temperature sensor is used to calculate the corresponding temperature. The formulae above represent the variation of electrical resistance with temperature.

For temperatures above 0°C it is possible to derive an explicit expression from the characteristic according to EN 60 751:

$$t = \frac{-R_0 \times A + [(R_0 \times A)^2 - 4 \times R_0 \times B \times (R_0 - R)]^{1/2}}{2 \times R_0 \times B}$$

R = measured resistance in Ω
t = calculated temperature in °C
R_0, A, B = parameter as per IEC 751

Tolerance limits

EN 60 751 distinguishes between two tolerance classes:

Class A: $\Delta t = \pm (0.15 + 0.002 \times |t|)$
Class B: $\Delta t = \pm (0.30 + 0.005 \times |t|)$

t = temperature in °C (without sign)

The formula for calculating the tolerance ΔR in Ω at a temperature of t > 0°C is:

$$\Delta R = R_0(A + 2 \times B \times t) \times \Delta t$$

For t < 0°C it is:

$$\Delta R = R_0(A + 2 \times B \times t - 300°C \times C \times t^2 + 4 \times C \times t^3) \times \Delta t$$

Tolerance Class A applies for temperatures between -200 and +600°C.

Tolerance Class B covers the entire definition range of -200 to +850°C.

Extended tolerance classes

It is frequently found that the two tolerance classes specified in the standard are not adequate to meet particular requirements. On the basis of the standard tolerances, **JUMO** have defined additional classes in order to meet the different requirements of the market.

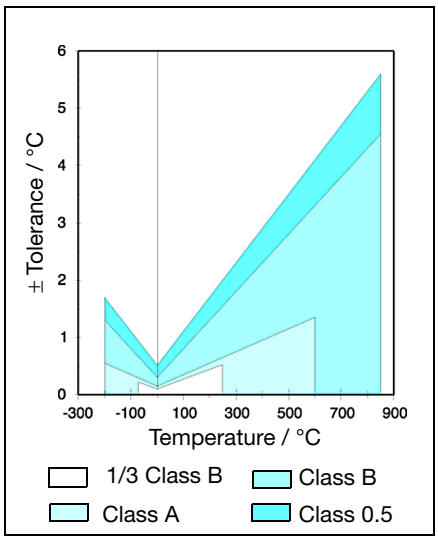

Fig. 2: Tolerance variation, depending on measurement temperature

JUMO GmbH & Co. KG
Delivery address: Mackenrodtstraße 14, 36039 Fulda, Germany
Postal address: 36035 Fulda, Germany
Phone: +49 661 6003-0
Fax: +49 661 6003-607
e-mail: mail@jumo.net
Internet: www.jumo.net

JUMO Instrument Co. Ltd.
JUMO House
Temple Bank, Riverway
Harlow, Essex CM 20 2TT, UK
Phone: +44 1279 635533
Fax: +44 1279 635262
e-mail: sales@jumo.co.uk
Internet: www.jumo.co.uk

JUMO Process Control, Inc.
8 Technology Boulevard
Canastota, NY 13032, USA
Phone: 315-697-JUMO
1-800-554-JUMO
Fax: 315-697-5867
e-mail: info@jumo.us
Internet: www.jumo.us

Tolerance class	Sensor category	Temperature range	Tolerance in K
Class 1/3 DIN B	Thin-film Wire	-50 to +200°C -70 to +250°C	± (0.10 K + 0.0017 x ltl)
Class A	Thin-film Wire	-70 to +300°C -200 to +600°C	± (0.15 K + 0.002 x ltl)
Class B	Thin-film Wire	-70 to +600°C -200 to +850°C	± (0.30 K + 0.005 x ltl)
Class 0.5	Thin-film Wire	-70 to +600°C -200 to +850°C	± (0.50 K + 0.006 x ltl)

Table 1: Tolerance classes - Temperature validity range

ltl = measured temperature in °C (without sign)

Construction of resistance thermometer probes

Apart from the virtually unlimited number of special models, there is also a series of probes whose components are completely defined by standard specifications.

Resistance thermometers with terminal head

These **resistance thermometers** are of modular construction, consisting of the measurement insert, protection tube, the terminal head and the terminal plate inside the head. A flange or a screw fitting can also be provided.

The **temperature sensor** is that part of the resistance thermometer which is directly affected by the measured temperature.

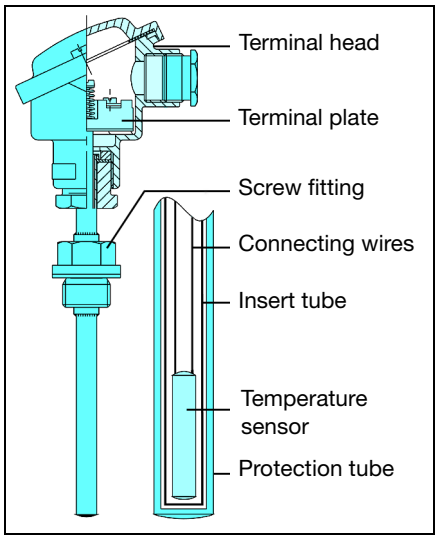

Fig. 3: Construction of an electrical thermometer

Measuring inserts are completely fabricated units, consisting of a temperature sensor and a terminal plate, with the sensor contained in an **insert tube** of 6 or 8mm diameter, made from bronze SnBz6 as per DIN 17 681 (up to 300°C) or nickel.

It is inserted into the actual **protection tube**, which is often made from stainless steel.

The tip of the insert tube is in full contact with the inside of the protection tube end plate, in order to ensure good heat transfer. The insert fixing screws are backed by springs so that bottom contact is maintained even with differential expansion between the insert tube and protection tube lengths. This arrangement makes it easy to replace the insert at a later date. The thermometers are available in single and twin versions. Their dimensions are specified in the standard DIN 43 762. Inserts with an integral 2-wire transmitter are also available.

If no insert is used, the temperature sensor is positioned directly inside the protection tube, embedded in aluminium oxide or a thermally conducting medium. After assembly, the terminal plate is mounted inside the terminal head and the connecting wires are soldered up.

In this arrangement, the sensor cannot be changed later; the complete resistance thermometer has to be replaced.

If a **pocket** is used, the thermometer can be removed without having to drain or depressurize the system.

The pocket is a type of protection tube which is mounted permanently at the measurement site, and in which the thermometer can be inserted and fixed in position. Other forms of pocket have an internal thread, so that a thermometer can be screwed in. The thermometer can then be made simply as an insert, or have its own protection tube. This, however, results in a much poorer response. The pocket itself is welded in position (which is not possible with a protection tube, because of the thin wall of the tube) or has an external thread, usually a pipe thread.

Since pockets are in direct contact with the fluid, they have to meet the same requirements for chemical resistance and mechanical robustness as protection tubes.

For the **terminal heads**, the DIN 43 729 standard defines two forms, A and B, which differ in size and also slightly in shape.

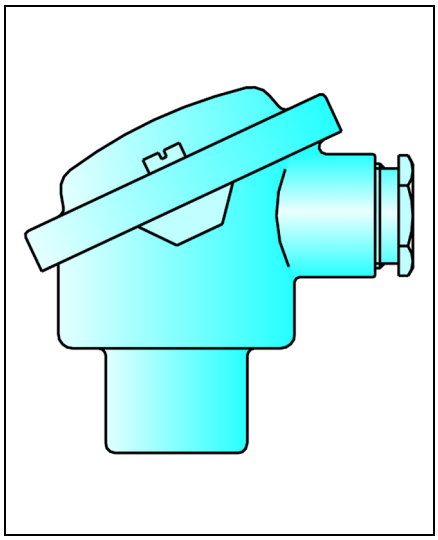

Fig. 4: Terminal head to DIN 43 729, Form B

The material used is cast iron, aluminium or plastic.

In addition, there are various other forms which are adapted to meet special requirements. The enclosure protection is not convered by the standard, it is usually a splashproof form (IP 54).

The nominal diameter of the bore in the terminal head, to take the protection tube, is:
for Form A: 22, 24 or 32mm.
for Form B: 15mm or
thread M 24 x 1.5.

The smaller terminal head (Form B) is the most widely used one, and the 2-wire transmitters are designed for this form.

JUMO GmbH & Co. KG
Delivery address: Mackenrodtstraße 14, 36039 Fulda, Germany
Postal address: 36035 Fulda, Germany
Phone: +49 661 6003-0
Fax: +49 661 6003-607
e-mail: mail@jumo.net
Internet: www.jumo.net

JUMO Instrument Co. Ltd.
JUMO House
Temple Bank, Riverway
Harlow, Essex CM 20 2TT, UK
Phone: +44 1279 635533
Fax: +44 1279 635262
e-mail: sales@jumo.co.uk
Internet: www.jumo.co.uk

JUMO Process Control, Inc.
8 Technology Boulevard
Canastota, NY 13032, USA
Phone: 315-697-JUMO
1-800-554-JUMO
Fax: 315-697-5867
e-mail: info@jumo.us
Internet: www.jumo.us

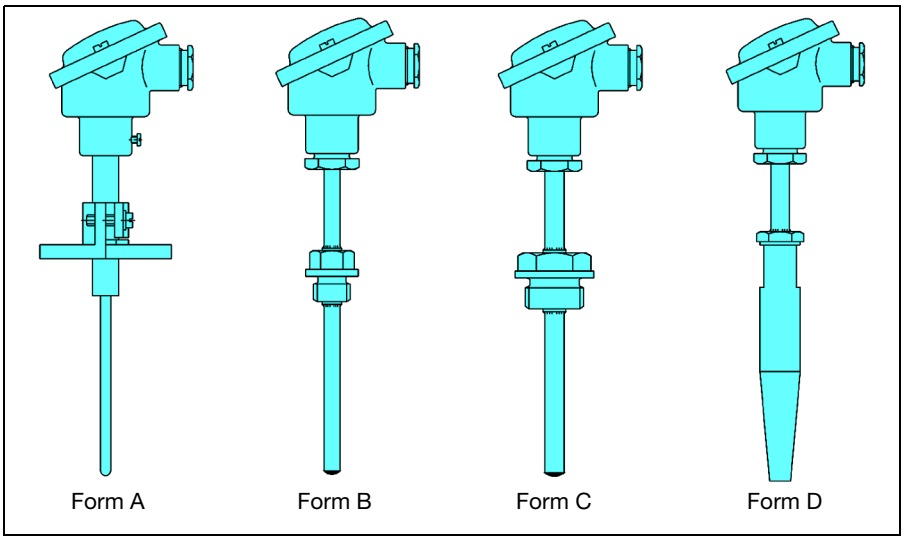

Fig. 5: Thermometers to DIN 43 770

The standards DIN 43 764 to 43 769 define various protection tube designs for different resistance thermometers **and** thermocouples in different applications. They are all fitted with an insert and a terminal head Form B. The diameters and lengths of the protection tubes are also fixed.
The design of the protection tubes of these thermometers (with flange, taper, etc.) are identified by code letters A to G, which themselves are laid down in DIN 43 763.
Form A: enamelled tube for mounting by sliding stop flange, for flue gas measurement

Form B: tube with fixed external ½" pipe thread

Form C: tube with fixed external 1" pipe thread

Form D: pressure-resistant thick-walled tube, for welding into position

Form E: tube tapering at the tip, for rapid response and mounting by sliding stop flange

Form F: tube as Code E, but with fixed flange

Form G: tube as Code E, but with fixed external 1" pipe thread

The above-mentioned standard DIN 43 763 also lays down the materials and their abbreviations in the form of special codes. For instance: the designation "Protection tube DIN 43 763-B1-H" identifies a tube to Form B, i.e. with a welded-on external ½" pipe thread, length 305mm (code number 1), in steel St 35.8 (code letter H). The standard also indicates the maximum pressure in air, water or steam as well as the maximum flow velocity. This makes it easy to select the protection tubes during the design phase of system construction.
There are also numerous special versions available, partly with standardized terminal heads and partly in highly specialized non-standard forms with plug connectors or attached cable.

Resistance thermometers to DIN EN 14 597
Resistance thermometers for use with temperature controllers or limiters for heating systems must meet the requirements of the standard DIN EN 14 597. These are resistance thermometers, as described in the previous section, but with an additional TUV type approval.
The resistance thermometer must withstand temperatures which are 15% above the upper temperature limit for at least one hour, and must meet specific response times, depending on the fluid
(e.g. in air: $t_{0.63}$ = 120 sec).
Furthermore, the thermometer must be designed to withstand mechanical loading caused by the external pressure and the flow rate of the medium, at the operating temperatures.
Alterations to such thermometers are not permitted without obtaining a fresh TUV approval!

Explosion-protected resistance thermometers
In all areas where flammable materials are stored, processed or manufactured, there is a possibility that, in combination with air, an explosive atmosphere may be formed which represents a hazard to the environment. The necessary conditions and requirements which electrical equipment has to meet in order that it can be used in an area exposed to an explosion hazard are summarized in the European Standards EN 50 014 … EN 50 020. Equipment that conforms to these standards can therefore be used throughout Europe.

Pressure-tight enclosure EEx "d"
Transducers in pressure-tight enclosures are designed so that all components which could ignite an explosive atmosphere are safely enclosed in the protective fitting or in the terminal head. Any explosion produced inside can therefore not be propagated to the outside. This is achieved by close tolerances, special cable glands and a particularly robust construction of the terminal head. Advantages of this version:
- an intrinsically safe power supply is not required
- connection in 2-wire, 3-wire or 4-wire circuit is possible
- also available with 2-wire transmitter

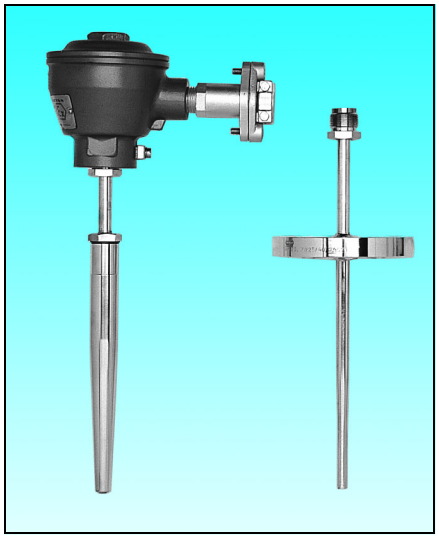

Fig. 6: Resistance thermometer in pressure-tight enclosure EEx "d"

Intrinsic safety EEx "i"
By contrast with protection "d", which refers generally to the actual device, protection "i" always considers the complete circuit.

JUMO GmbH & Co. KG
Delivery address: Mackenrodtstraße 14, 36039 Fulda, Germany
Postal address: 36035 Fulda, Germany
Phone: +49 661 6003-0
Fax: +49 661 6003-607
e-mail: mail@jumo.net
Internet: www.jumo.net

JUMO Instrument Co. Ltd.
JUMO House
Temple Bank, Riverway
Harlow, Essex CM 20 2TT, UK
Phone: +44 1279 635533
Fax: +44 1279 635262
e-mail: sales@jumo.co.uk
Internet: www.jumo.co.uk

JUMO Process Control, Inc.
8 Technology Boulevard
Canastota, NY 13032, USA
Phone: 315-697-JUMO
1-800-554-JUMO
Fax: 315-697-5867
e-mail: info@jumo.us
Internet: www.jumo.us

In this form of resistance thermometer, the intrinsically safe 2-wire transmitter with a 4 — 20 mA output signal is located directly inside the enlarged terminal head of the thermometer, and is included in an intrinsically safe circuit.
This arrangement offers decisive advantages:
- interference-free output signal, directly from the thermometer
- low installation cost
- no lead compensation required
- signal can be transmitted over long distances
- installation and repair while the system is in operation

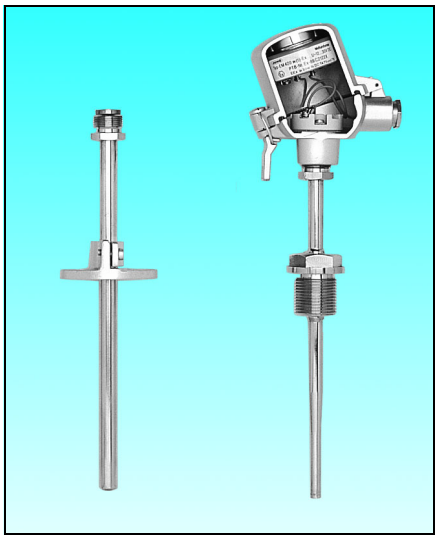

Fig. 7: Resistance thermometer with intrinsic safety EEx "i"

Resistance thermometers with 2-wire transmitters
Resistance thermometers with transmitter are used for measuring temperatures in liquids and gases when measurement signals have to be transmitted over considerable distances, free from interference. The transmitter converts the sensor signal into a standard 4 — 20mA current signal which is linear with temperature.
The supply for the transmitter is fed through the same connections, utilizing the quiescent current level of 4 mA. Because of the zero offset, this method is also referred to as "live zero". The 2-wire transmitter amplifies the signal and achieves a considerable reduction in its sensitivity to interference. In these styles, the 2-wire transmitter is encapsulated in epoxy resin and mounted directly inside the terminal head of the resistance thermometer.

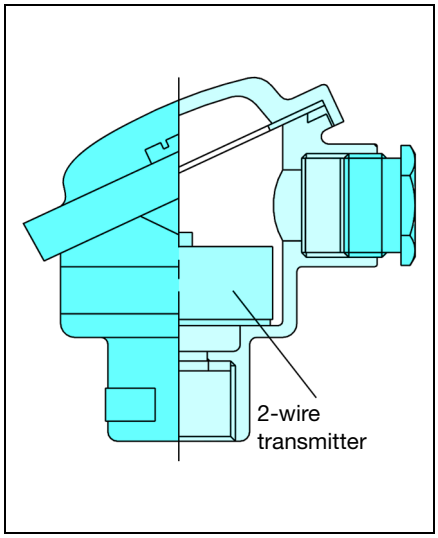

Fig. 8: Terminal head with a 2-wire transmitter

The transmitter is suitable for operating temperatures up to 90°C. Terminal heads are available in Forms BUZ, BBK and BUZH, as well as the standard Form B.

Resistance thermometers with connecting cable
On resistance thermometers with a connecting cable, the insert and terminal head are omitted. The temperature sensor is joined directly to the connecting cable, and placed in the protection tube. Strain relief is provided, for instance by grooving or compressing the end of the protection tube several times (enclosure IP65). The internal space between the protection tube and the temperature sensor is normally filled with thermally conductive material to improve the thermal contact to the fluid being measured. The maximum operating temperature is determined mainly by the temperature limit for the sheathing and insulating material of the connecting cable. The table shows some typical materials and their temperature limits.

Material	t_{max}/°C
PVC	80
PVC 105	105
Silicone	180
PTFE	260

The thermometers are available in many different styles, which are frequently designed to suit particular user requirements.

Some typical data values are:
- diameter: 2 — 8 mm
- protection tube length: 35 — 150 mm
- protection tube material: stainless steel, brass, coated steel
- circuit connection: 2, 3, or 4-wire
- mounting: flange with union connector, fixed nipple and clamping nipple

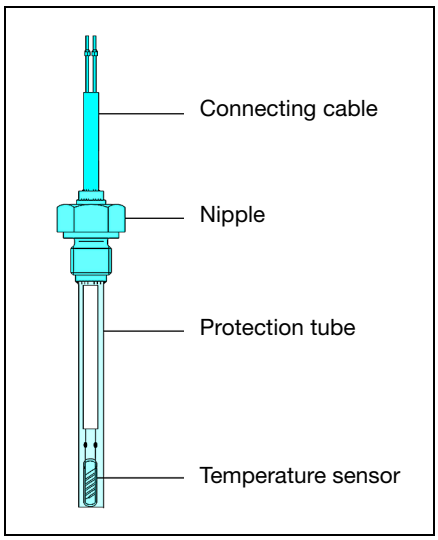

Fig. 9: Construction of a resistance thermometer with attached cable

Another type is **resistance thermometers for sterilizers.**
The temperature probes must have an especially high reliability, since these installations usually operate 24 hours a day.
The transition from the protection tube to the connecting cable is sealed steam-tight and can withstand absolute pressures of 0.1 to 4 bar at temperatures up to 150°C.
The basic versions are fitted with high-temperature PTFE connecting cables and smooth protection tubes. Up to three Pt100 temperature sensors to EN 60 751 can be fitted in these temperature probes (see Data Sheet 90.2830).

Mineral-insulated resistance thermometers
Mineral-insulated resistance thermometers are constructed using a mineral-insulated cable. The thin stainless-steel cable sheath contains the copper conductors embedded in compressed, fire-resistant magnesium oxide. The temperature sensor (in 2-, 3- or 4-wire circuit) is connected to the internal conductors and fitted into the stainless steel protection tube, which is welded to the cable sheath. Diameters as small as 1.9 mm are available.

JUMO GmbH & Co. KG
Delivery address: Mackenrodtstraße 14, 36039 Fulda, Germany
Postal address: 36035 Fulda, Germany
Phone: +49 661 6003-0
Fax: +49 661 6003-607
e-mail: mail@jumo.net
Internet: www.jumo.net

JUMO Instrument Co. Ltd.
JUMO House
Temple Bank, Riverway
Harlow, Essex CM 20 2TT, UK
Phone: +44 1279 635533
Fax: +44 1279 635262
e-mail: sales@jumo.co.uk
Internet: www.jumo.co.uk

JUMO Process Control, Inc.
8 Technology Boulevard
Canastota, NY 13032, USA
Phone: 315-697-JUMO
1-800-554-JUMO
Fax: 315-697-5867
e-mail: info@jumo.us
Internet: www.jumo.us

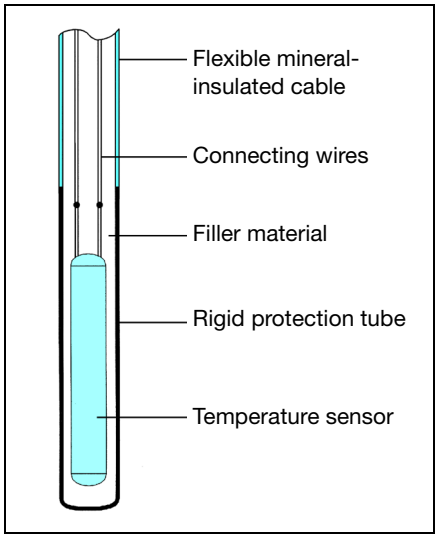

Fig. 10: Construction of a mineral-insulated resistance thermometer

The excellent heat transfer between the **protection tube** and the temperature sensor leads to a fast response ($t_{0.5}$ from 1.2 sec) and high accuracy. The shockproof construction ensures a long life. The flexible **mineral-insulated cable**, with a minimum bending radius of 5 x outside diameter (1.9/3/6mm), permits temperature measurement at relatively inaccessible locations. Because of their special properties, mineral-insulated resistance thermometers are used in chemical plant, power stations, pipelines, in engines, on test beds and in all locations where flexibility and problem-free installation are required.

Heat meter resistance thermometers

Resistance thermometers for heat meters have a federal type approval from the German Physikalisch-Technische-Bundesanstalt (PTB). The various styles meet the requirements of the Draft European Standard EN 1434 and are recommended by the German District Heating Association (AGFW = Arbeitsgemeinschaft für Fernwärme). **Thermometers with a terminal head** are available for direct temperature measurement as well as for use in suitable close-fitting pockets. The fitting length varies from 85 to 400mm. A variant is the **resistance thermometer with attached cable,** as a screw-in or push-in version. Screw-in resistance thermometers with an M 10x1 thread measure temperature directly inside the liquid, with the advantages of fast response and low heat conduction error. Using push-in thermometers in close-fitting pockets makes it unnecessary to drain the system when replacing the thermometer at the end of the certification period. The ideal locations for screw-in resistance thermometers with an attached cable are ball valves for 1/2", 3/4" and 1" pipes. The special design of the ball valves makes it unnecessary to drain the system when fitting or replacing the temperature probe. The small pipe diameters lead to a fitting length no greater than 30mm. This gives rise to a heat conduction error which affects the measurement. The optimized internal construction of **JUMO** resistance thermometers results in a negligible heat conduction error of less than 0.03°C, and is thus even lower than the PTB specification of 0.1°C.

Insertion resistance thermometers

The design is essentially a resistance thermometer with attached cable, which is fitted with a handle. Special features of this thermometer style are: it is unaffected by alternating temperatures, sealed against water (vapor), resistant to mechanical shock and vibration. The temperature sensor in 2-wire or 3-wire circuit is inserted into the protection tube which is then sealed. The stainless steel protection tube is 100 mm long and has a concentric point or angled tip. The handles in PTFE, PPS plastics or HTV silicone are resistant to a large number of aggressive media. The connecting cable has PTFE insulation for good heat resistance.

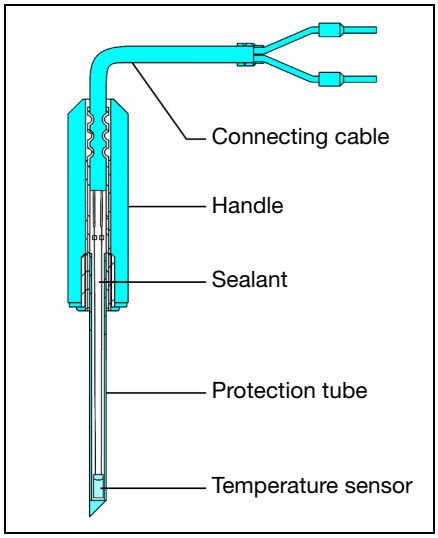

Fig. 11: Construction of an insertion resistance thermometer

A special feature of the internal construction is the sealing, which withstands high temperatures and prevents entry of water (vapor).

Surface resistance thermometers

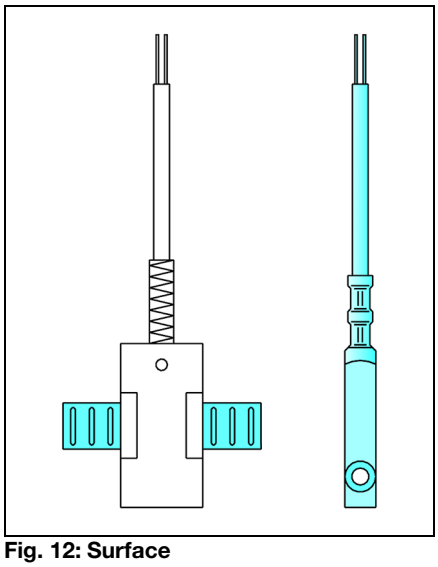

Fig. 12: Surface resistance thermometers

Surface resistance thermometers are used preferably for measuring temperatures on closed pipe systems and other round or flat surfaces. Simple installation by tension bands or hose clips avoids any mechanical preparation of the measurement location. Other versions have a mounting hole, for securing to any form of surface by a screw. Indirect temperature measurement avoids disturbing the flow of the liquid or gas. In addition, pressure and chemical effects do not influence the life of the resistance thermometer.

The object being measured is hardly affected by the small thermal mass. Heat-conductive paste can be used to improve the heat transfer. Large temperature differences between the gas/liquid and the surroundings have a direct effect on the measurement. In such cases, it is advisable to provide the thermometer with thermal insulation.

Indoor and outdoor resistance thermometers

Different versions are available for temperature measurement indoors and in the open. In the **domestic version,** the temperature sensor is enclosed in an elegant plastic housing with IP20 protection. On **outdoor thermometers for industrial use,** with IP65 protection, the temperature sensor is mounted outside the housing and enclosed by a protective cap.

JUMO GmbH & Co. KG
Delivery address: Mackenrodtstraße 14, 36039 Fulda, Germany
Postal address: 36035 Fulda, Germany
Phone: +49 661 6003-0
Fax: +49 661 6003-607
e-mail: mail@jumo.net
Internet: www.jumo.net

JUMO Instrument Co. Ltd.
JUMO House
Temple Bank, Riverway
Harlow, Essex CM 20 2TT, UK
Phone: +44 1279 635533
Fax: +44 1279 635262
e-mail: sales@jumo.co.uk
Internet: www.jumo.co.uk

JUMO Process Control, Inc.
8 Technology Boulevard
Canastota, NY 13032, USA
Phone: 315-697-JUMO
1-800-554-JUMO
Fax: 315-697-5867
e-mail: info@jumo.us
Internet: www.jumo.us

A further version is provided with a stainless steel protection tube, into which the temperature sensor is inserted.
Electrical connection is made through a Pg9 cable gland. The measuring range covers -30 to +80°C. Various versions can be fitted with a 2-wire transmitter having a 4 — 20mA output signal.

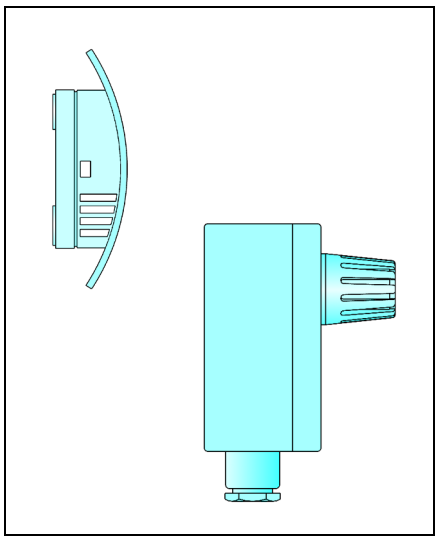

Fig. 13: Indoor and outdoor resistance thermometers

Precision resistance thermometers
For maximum stability, it is usual to arrange the resistance coil freely suspended inside the protection tube.

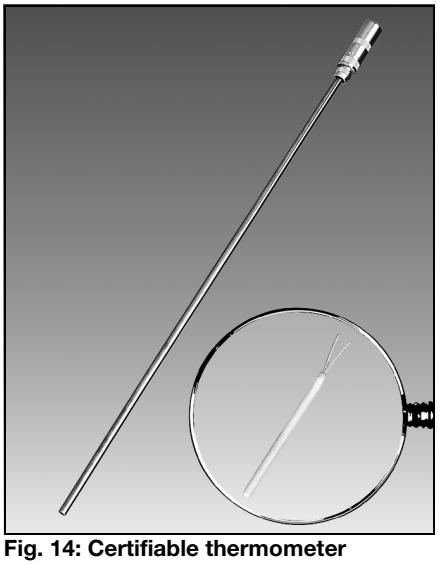

Fig. 14: Certifiable thermometer

This prevents mechanical loading under temperature, caused by differential expansion. But vibration can very easily result in a break in the coil. So, while these thermometers have excellent long-term stability, of the order of 0.001°C or less, the low mechanical strength means that they are unsuited for industrial use. For such applications **JUMO** employs a temperature sensor with a platinum coil that is secured in a ceramic sleeve. The leads to the connector are made as a 4-wire circuit. A stainless steel tube protects the sensor from mechanical influences. The temperature range covers -200 to +450°C, depending on the version. The measurement accuracy can be up to ±0.025°C.

Measurement

Connection of resistance thermometers
In a resistance thermometer, the electrical resistance varies with temperature. For evaluating the output signal, a constant current is passed through the thermometer and the voltage drop across it is measured. For this voltage drop, Ohm's Law states that:

$$V = R \times I$$

The measuring current should be as small as possible, in order to avoid heating of the sensor. It can be assumed that a measuring current of 1 mA does not introduce any appreciable errors. This current produces a voltage drop of 0.1 V in a Pt100 at 0°C. This signal voltage must now be transmitted through the connecting cables to the indicating or evaluation point, with a minimum of alteration.

Three different types of connecting circuit are used for this purpose:

2-wire circuit
The connection between the thermometer and the evaluation electronics is provided by a 2-core cable. Like any other electrical conductor, this cable has an electrical resistance which is in series with the temperature sensor. So the two resistances are added, and the result is a systematically higher temperature indication. For longer distances, the lead resistance may amount to a few ohms and produce an appreciable shift in the measured value. In order to avoid this error, the resistance is compensated electrically.
The instrument is designed to allow always for a lead resistance of, for instance, 10Ω. When the resistance thermometer is connected up, a compensating resistance is connected in one of the measurement lines and the sensor is replaced initially by a 100.00Ω resistor. The compensating resistance is then altered until a reading of 0°C appears on the instrument.
Because of the relative large amount of work involved and the fact that effects of temperature on the measurement cable are not covered, the use of the 2-wire circuit is becoming increasingly rare.

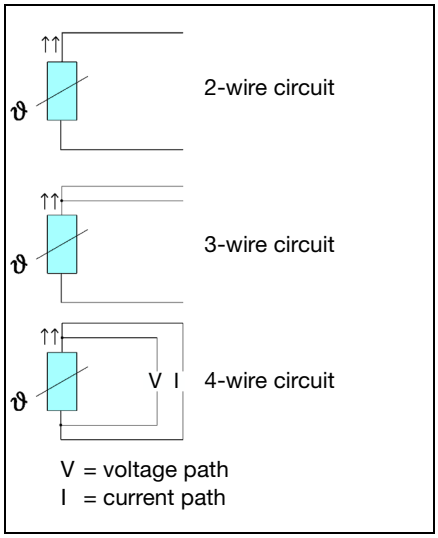

Fig. 15: Connection of resistance thermometers

3-wire circuit
The effects of the lead resistances and their fluctuation with temperature are reduced to a minimum in the 3-wire circuit. In this circuit, an additional lead is brought out to a contact on the resistance thermometer. This results in two measuring circuits, one of which is used as a reference.
The 3-wire circuit makes it possible to compensate for both the value and the temperature dependency of the lead resistance. But it is a requirement that all three cores have identical properties and are at the same temperature. In most cases, this is true to a sufficient degree of accuracy, so that the 3-wire circuit is the one most frequently used these days. No lead compensation is required.

4-wire circuit
The optimum form of connection for resistance thermometers is the 4-wire circuit. The measurement depends neither on the lead resistances nor on their variation due to temperature. No lead compensation is required. The thermometer receives the measuring current I through the supply connections. The voltage drop V across the temperature sensor is picked off by the measuring leads.

JUMO GmbH & Co. KG
Delivery address: Mackenrodtstraße 14, 36039 Fulda, Germany
Postal address: 36035 Fulda, Germany
Phone: +49 661 6003-0
Fax: +49 661 6003-607
e-mail: mail@jumo.net
Internet: www.jumo.net

JUMO Instrument Co. Ltd.
JUMO House
Temple Bank, Riverway
Harlow, Essex CM 20 2TT, UK
Phone: +44 1279 635533
Fax: +44 1279 635262
e-mail: sales@jumo.co.uk
Internet: www.jumo.co.uk

JUMO Process Control, Inc.
8 Technology Boulevard
Canastota, NY 13032, USA
Phone: 315-697-JUMO
1-800-554-JUMO
Fax: 315-697-5867
e-mail: info@jumo.us
Internet: www.jumo.us

If the input resistance of the electronics is many times greater than the lead resistance, then the latter can be neglected. The voltage drop determined in this way is independent of the properties of the connecting wires.

With both 3-wire and 4-wire circuits it must be remembered that the circuit is not always taken right up to the actual sensing element. The connection from the sensor to the terminal head of the fitting, the so-called internal connection, is frequently made in a 2-wire circuit. This results in similar problems to those discussed for the 2-wire circuit, although to a much smaller extent. The total resistance, consisting of the sum of internal connection and sensor, is defined by DIN 16 160 as the **thermometer resistance**.

Insufficient insulation resistance

Because of the finite resistance between the connections and within the insulation material in which the sensor is embedded, there is a possibility of a further error due to poor insulation resistance which reduces the indicated temperature. Based on a Pt100 thermometer, an insulation resistance of 100 kΩ results in an error of 0.25°C, and 25 kΩ one of 1°C. Because of the variation of insulation resistance with temperature, it is possible for this error to vary with the measuring conditions.
For ceramic insulating materials in particular, the resistance decreases with increasing temperature.

In view of the relatively low maximum temperature of about 600°C, this effect is hardly noticeable for platinum temperature sensors. Much more important is any moisture which may penetrate the insulation, as this can cause a substantial measurement error. Sensors are therefore usually covered by a glaze or some other form of hermetic sealing. The measuring insert itself is also sealed, in order to prevent entry of moisture into the probe tube. Inserts are readily interchangeable, since they are completely enclosed units. For resistance thermometers without inserts, on the other hand, it is vital to ensure a reliable seal if they have to be repaired.

Self-heating

The output signal of a resistance thermometer can only be measured by passing a current through the sensor. This measurement current produces a power loss and therefore heats up the sensor, with the result that the temperature indication is increased. Self-heating depends on a number of factors, including the extent to which the heat generated can be removed by the fluid (or gas) being measured. Because the relationship for electrical power is $P = R \times I^2$, the effect depends also on the basic resistance of the temperature sensor. For the same measurement current, a Pt1000 temperature sensor is heated ten times as much as a Pt100. In addition, design features (thermometer size) and thermal conduction and capacity also determine the error. The thermal capacity of the fluid and its flow velocity also have a large influence on this effect.
Thermometer manufacturers often specify a self-heating coefficient, which represents a measure for the temperature increase through a defined power loss in the sensor. Such calorimetric measurements are carried out under standard conditions (in water at 0.5m/sec, or air at 2m/sec), but the information is somewhat theoretical and serves only for comparison between different designs.
In most cases, the measurement current is set at 1mA by the instrument manufacturer, since this value has been found appropriate in practice and produces no appreciable self-heating.
For example, a Pt100 temperature sensor is placed in a closed and fully insulated container with $10cm^3$ of air, and this measurement current of 1 milliampere increases the air temperature by 39°C after one hour. With flowing gases and liquids the effect is very much less pronounced, because of the much greater heat dissipation.
Because of differences in measurement conditions it is necessary to measure the actual self-heating effect on site. The current is varied and the corresponding temperature is measured. The self-heating coefficient E is derived as:

$$E = \Delta t / (R \times I^2)$$

where
Δt = (indicated temperature) – (fluid temperature),
R = thermometer resistance
I = measurement current

The self-heating coefficient can be used to determine the maximum measurement current if an error Δt is permitted.

$$I = (\Delta t / E \times R)^{1/2}$$

Parasitic thermal voltages

The effect of thermo-electric voltages can also be seen during temperature measurement with resistance thermometers, in this case as a highly undesirable side effect. Thermal voltages can be generated at the junction of two different metals.
Such metal junctions occur at the lead connections in the resistance thermometer. The connecting wires of the sensor frequently consist of silver, with extensions of copper or nickel as internal conductors, for example.

Under normal conditions, it can be assumed that both junctions are at the same temperature and that the resulting thermal voltages cancel each other. Differences in heat conduction to the outside may however lead to the establishment of different temperatures; the resulting thermal voltage is interpreted by the electronics as a voltage drop, thus producing a measurement error.
This can take the form of an increase or a decrease, depending on the polarity of the thermal voltage which is produced.

The magnitude of the resulting error depends very much on the characteristics of the electronics, in particular on how the voltage is evaluated as a temperature.

A simple method for diagnosing such errors consists of performing two measurements with the measurement current in opposite directions. The larger the difference between the two measurements, the greater is the thermal voltage generated.

Transfer function

A sensor will never respond instantaneously, but always with a certain delay, because of the ever-present thermal resistances within the probe. The resulting measurement error, caused by the measurement or output signal lagging behind a change in the substance being measured, is known as the **dynamic error**.
As a simplification, it is possible to think of the probe as consisting of a combination of resistances and energy stores. The material masses and the corresponding thermal capacities form the energy stores. The materials have different thermal conductivities which cause the resistances. The components of the thermometer often have both characteristics simultaneously.

JUMO GmbH & Co. KG
Delivery address: Mackenrodtstraße 14, 36039 Fulda, Germany
Postal address: 36035 Fulda, Germany
Phone: +49 661 6003-0
Fax: +49 661 6003-607
e-mail: mail@jumo.net
Internet: www.jumo.net

JUMO Instrument Co. Ltd.
JUMO House
Temple Bank, Riverway
Harlow, Essex CM 20 2TT, UK
Phone: +44 1279 635533
Fax: +44 1279 635262
e-mail: sales@jumo.co.uk
Internet: www.jumo.co.uk

JUMO Process Control, Inc.
8 Technology Boulevard
Canastota, NY 13032, USA
Phone: 315-697-JUMO
1-800-554-JUMO
Fax: 315-697-5867
e-mail: info@jumo.us
Internet: www.jumo.us

The speed with which the thermometer responds depends in the first instance on the ratio of the thermal resistance to the thermal capacity of the probe. The larger this thermal resistance, the slower the probe heats up. So in order to achieve a fast response it is desirable to use small sensors and thin materials which conduct heat readily. A particularly unfavourable feature is the air gap between the measurement insert and its protection tube, since all gases are poor heat conductors. The remedy consists of embedding the insert in thermally conductive pastes or metal oxides. Thermocouples have essentially shorter reponse times than resistance thermometers, because of their lower thermal mass. This applies in particular to thin mineral-insulated thermocouples. However, in most cases the difference is largely outweighed by the comparatively high thermal capacity of the protective fitting. The response time generally increases with increasing protection tube diameter. It is therefore advisable to use thin-walled fittings of small diameter, as far as the mechanical circumstances allow.

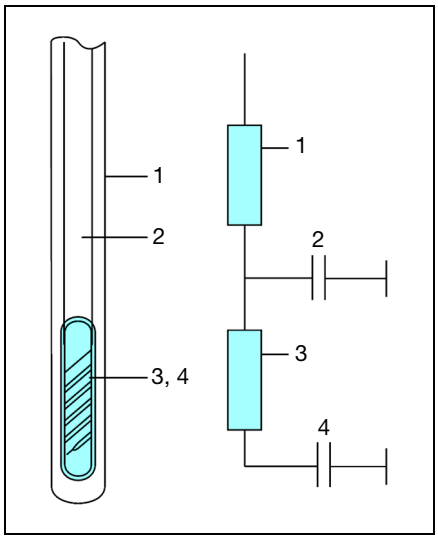

Fig. 16: Thermal resistances in a thermometer

The thermal conductivity of the protection tube material is also very important. Copper and iron are comparatively good heat conductors, but stainless steel and ceramics are not so good.

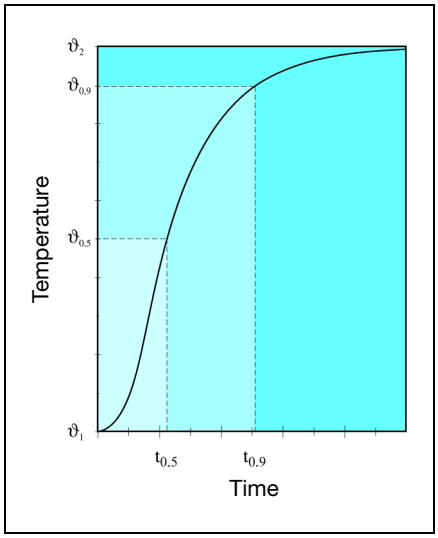

Fig. 17: The transfer function

The **transfer function**, i.e. the variation of the measured value following a sudden change in temperature, provides information on this effect. Tests to determine the transfer function of the thermometer are carried out in a flow of warm water or air, using special test set-ups, as specified for example in EN 60 751. Two times (response periods) characterize the transfer function:

- **Half-value time $t_{0.5}$**
  The half-value time indicates the period during which the measured value reaches 50% of its final value.
- **90%-time $t_{0.9}$**
  The 90%-time indicates the period during which the measured value reaches 90% of its final value.

A time τ taken to reach 63.2% of the final value is not generally specified, because of possible confusion with the time constant of an exponential function. The heat transfer function of virtually all thermometers deviates clearly from such a function.

Errors in resistance thermometers

Effect of the cable

In measurements using resistance thermometers, the results may be falsified by design features or measurement effects. The following section explains the most important effects which may cause erroneous measurements.
As described elsewhere, the lead resistance enters into the measurement as a resistor in series with the sensor.
Particularly in large installations, with the resulting longer transmission distances, the lead resistance can reach the same order of magnitude as the sensor resistance itself. Compensation of the lead resistance is therefore absolutely essential, and usually consists of shifting the zero of the instrument connected to the sensor. However, such compensation does not take account of the changes in the lead resistance with temperature. If the connecting cable is subjected to fluctuating temperatures, this will lead to varying degrees of measurement error. The effect only becomes apparent with larger lead resistances, i.e. with longer cable lengths and small conductor cross-sections.

Heat conduction error

A thermometer is rarely used in the range of ambient temperatures. If the measured temperature is above or below the ambient temperature, a temperature gradient will result at the thermometer, between the measurement point and the surroundings.
This leads to an error in the temperature indication: heat flows through the protection tube and the internal components from the hotter to the cooler location. In addition, the sensor is connected to the cable, forming a direct metallic contact between the sensor and the surroundings – a thermal bridge which also causes an error. Good electrical conductors always have a low thermal resistance, so the requirement for a lower lead resistance is counteracted by a higher heat conduction error.
Furthermore, the design of the thermometer influences the heat conduction error. The sensor must have a good thermal connection to the protection tube, but at the same time be thermally decoupled from the connecting cable. The installation length of the thermometer must not be made too short, otherwise too much heat will be dissipated. The **immersion depth** (the length of the portion of the thermometer which is exposed to the medium being measured) depends on the type of medium and the rate at which it transports heat. For example, a fast-flowing liquid will transfer more heat than still air, and will therefore provide better compensation for the heat conduction of the thermometer.
Measurements in liquids only require about half of the installation length compared with that used with gases.

JUMO GmbH & Co. KG
Delivery address: Mackenrodtstraße 14, 36039 Fulda, Germany
Postal address: 36035 Fulda, Germany
Phone: +49 661 6003-0
Fax: +49 661 6003-607
e-mail: mail@jumo.net
Internet: www.jumo.net

JUMO Instrument Co. Ltd.
JUMO House
Temple Bank, Riverway
Harlow, Essex CM 20 2TT, UK
Phone: +44 1279 635533
Fax: +44 1279 635262
e-mail: sales@jumo.co.uk
Internet: www.jumo.co.uk

JUMO Process Control, Inc.
8 Technology Boulevard
Canastota, NY 13032, USA
Phone: 315-697-JUMO
1-800-554-JUMO
Fax: 315-697-5867
e-mail: info@jumo.us
Internet: www.jumo.us

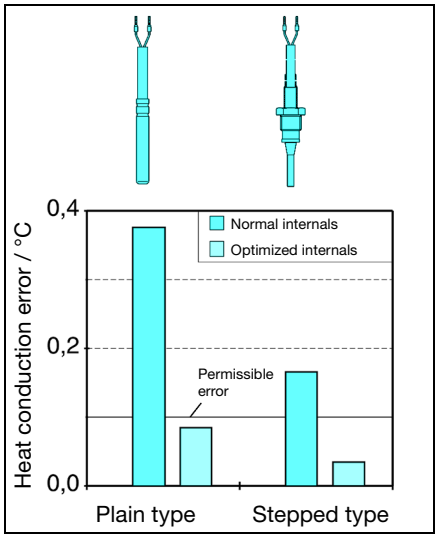

Fig. 18: Optimizing the heat conduction error, through protection tube geometry and internal layout

An example will demonstrate the effect of design on the heat conduction error. When used with heat meters, thermometers must have a heat conduction error not exceeding 0.1°C under the following conditions:

- Measured temperature: 80°C,
- Ambient temperature: 20°C,
- Measured medium: water, at a flow velocity of 0.1 to 0.2 m/sec

Particularly in short temperature probes with a fitting length less than 50mm, the achievement of the accuracy specified above raises problems which have to be solved through the design. The connecting cable is taken right up to the sensor and consists of copper. The thermal interface between sensor and protection tube is usually provided by heat conductive paste.

In the absence of any special precautions for thermal decoupling, there is a heat conduction error of about 0.3°C.

A 50% improvement is achieved by reducing the protection tube diameter in the region of the sensor. The error of 0.15°C for this probe version is still not adequate to meet the test criteria. Finally, a thermal decoupling of the connecting cable from the sensor reduces the heat conduction error to 0.03°C, which is now a factor of 10 better than the original version.

Measures for reducing the heat conduction error

It is not always possible to optimize the probe design for a particular measurement application so that the result is not affected by heat conduction errors. The publication "Electrical Temperature Measurement", described on page 15, summarizes the most important selection criteria for a probe with regard to heat conduction errors.

Calibration

During its operational life, a thermometer experiences changes in its characteristic compared with its original ex-factory condition, because of chemical and mechanical effects, as well as through ageing phenomena such as recrystallization and diffusion. In order to allow for drift and to compensate for it, it is necessary to recalibrate the thermometer at regular intervals.

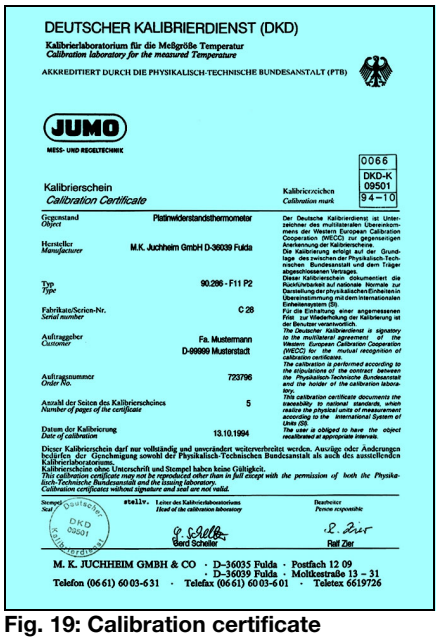
DEUTSCHER KALIBRIERDIENST (DKD)
Kalibrierlaboratorium für die Meßgröße Temperatur
Calibration laboratory for the measured Temperature
AKKREDITIERT DURCH DIE PHYSIKALISCH-TECHNISCHE BUNDESANSTALT (PTB)

JUMO
MESS- UND REGELTECHNIK

0066
DKD-K
09501
94-10

Kalibrierschein
Calibration Certificate

Kalibrierzeichen
Calibration mark

Gegenstand *Object*	Platinwiderstandsthermometer
Hersteller *Manufacturer*	M.K. Juchheim GmbH D-36039 Fulda
Typ *Type*	90.286 - F11 P2
Fabrikat/Serien-Nr. *Serial number*	C 28
Auftraggeber *Customer*	Fa. Mustermann D-99999 Musterstadt
Auftragsnummer *Order No.*	723796
Anzahl der Seiten des Kalibrierscheines *Number of pages of the certificate*	5
Datum der Kalibrierung *Date of calibration*	13.10.1994

Der Deutsche Kalibrierdienst ist Unterzeichner des multilateralen Übereinkommens der Western European Calibration Cooperation (WECC) zur gegenseitigen Anerkennung der Kalibrierscheine.
Die Kalibrierung erfolgt auf der Grundlage des zwischen der Physikalisch-Technischen Bundesanstalt und dem Träger abgeschlossenen Vertrages.
Dieser Kalibrierschein dokumentiert die Rückführbarkeit auf nationale Normale zur Darstellung der physikalischen Einheiten in Übereinstimmung mit dem internationalen Einheitensystem (SI).
Für die Einhaltung einer angemessenen Frist zur Wiederholung der Kalibrierung ist der Benutzer verantwortlich.
The Deutscher Kalibrierdienst is signatory to the multilateral agreement of the Western European Calibration Cooperation (WECC) for the mutual recognition of calibration certificates.
The calibration is performed according to the stipulations of the contract between the Physikalisch-Technische Bundesanstalt and the holder of the calibration laboratory.
This calibration certificate documents the traceability to national standards, which realize the physical units of measurement according to the International System of Units (SI).
The user is obliged to have the object recalibrated at appropriate intervals.

Dieser Kalibrierschein darf nur vollständig und unverändert weiterverbreitet werden. Auszüge oder Änderungen bedürfen der Genehmigung sowohl der Physikalisch-Technischen Bundesanstalt als auch des ausstellenden Kalibrierlaboratoriums.
Kalibrierscheine ohne Unterschrift und Stempel haben keine Gültigkeit.
This calibration certificate may not be reproduced other than in full except with the permission of both the Physikalisch-Technische Bundesanstalt and the issuing laboratory.
Calibration certificates without signature and seal are not valid.

Stempel *Seal*: Deutscher Kalibrierdienst DKD 09501
stellv. Leiter des Kalibrierlaboratoriums *Head of the calibration laboratory*: Gerd Scheller
Bearbeiter *Person responsible*: Ralf Zier

M. K. JUCHHEIM GMBH & CO · D-36035 Fulda · Postfach 12 09 · D-36039 Fulda · Moltkestraße 13 – 31
Telefon (06 61) 60 03-631 · Telefax (06 61) 60 03-601 · Telex 6619726

Fig. 19: Calibration certificate

Recalibration consists of checking the indicated temperature values and, where appropriate, recording the amounts by which they deviate from the true temperatures. By contrast, the concept of **adjustment**, which is often used in this connection, means altering the instrument to render the deviation small, at least to within the tolerance limits.
Calibration is identical with testing and measuring the accuracy for each individual thermometer. The manufacturer is, however, unable to provide any guarantee for the long-term stability of these values, since he cannot predict the future application and frequency of use, and the resulting stresses on the thermometer. It is advisable to recalibrate a thermometer initially every year and to compare the results with the previous calibration data. In the course of time, this produces a life history of the thermometer, from which its stability can be seen.
Depending on whether the reproducibility is adequate or not for the particular application, the recalibration period can then be extended or shortened.
The question concerning the actual details and the accuracy of a calibration cannot be answered in general terms. It is always subject to agreement between the user and the calibration laboratory, including temperature ranges and test points. The accuracy is determined by the type of measurement that is applied.

The German Calibration Service (Deutscher Kalibrierdienst, DKD)

The opening of the internal European trade boundaries after 1992, the new quality standards such as ISO 9001, and the more stringent product liability regulations make increasing demands on the documentation of processes and on the monitoring of measuring devices. In addition, there is an increasing demand from users for higher product quality standards. A particularly stringent requirement arises from the ISO 9001 standard, which describes the global concept of a quality assurance system.

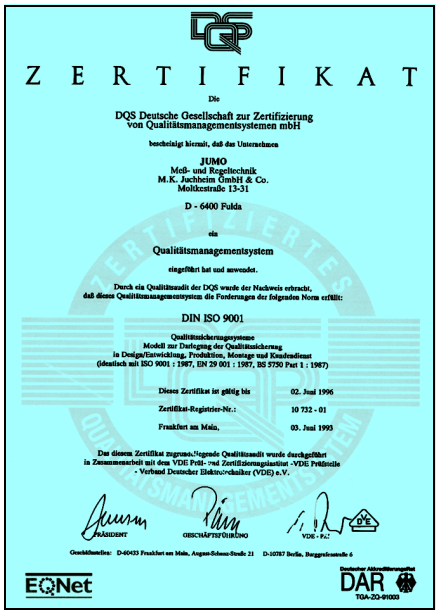
Z E R T I F I K A T

Die
DQS Deutsche Gesellschaft zur Zertifizierung von Qualitätsmanagementsystemen mbH

bescheinigt hiermit, daß das Unternehmen

JUMO
Meß- und Regeltechnik
M.K. Juchheim GmbH & Co.
Moltkestraße 13-31

D - 6400 Fulda

ein

Qualitätsmanagementsystem

eingeführt hat und anwendet.

Durch ein Qualitätsaudit der DQS wurde der Nachweis erbracht, daß dieses Qualitätsmanagementsystem die Forderungen der folgenden Norm erfüllt:

DIN ISO 9001

Qualitätssicherungssysteme
Modell zur Darlegung der Qualitätssicherung
in Design/Entwicklung, Produktion, Montage und Kundendienst
(identisch mit ISO 9001 : 1987, EN 29 001 : 1987, BS 5750 Part 1 : 1987)

Dieses Zertifikat ist gültig bis 02. Juni 1996
Zertifikat-Registrier-Nr.: 10 732 - 01
Frankfurt am Main, 03. Juni 1993

Das diesem Zertifikat zugrunde liegende Qualitätsaudit wurde durchgeführt in Zusammenarbeit mit dem VDE Prüf- und Zertifizierungsinstitut - VDE Prüfstelle - Verband Deutscher Elektrotechniker (VDE) e.V.

PRÄSIDENT GESCHÄFTSFÜHRUNG VDE - Pr.

Geschäftsstelle: D-60433 Frankfurt am Main, August-Schanz-Straße 21 D-10787 Berlin, Burggrafenstraße 6

EQNet DAR TGA-ZQ-91033

Fig. 20: Certificate to ISO 9001

JUMO GmbH & Co. KG
Delivery address: Mackenrodtstraße 14, 36039 Fulda, Germany
Postal address: 36035 Fulda, Germany
Phone: +49 661 6003-0
Fax: +49 661 6003-607
e-mail: mail@jumo.net
Internet: www.jumo.net

JUMO Instrument Co. Ltd.
JUMO House
Temple Bank, Riverway
Harlow, Essex CM 20 2TT, UK
Phone: +44 1279 635533
Fax: +44 1279 635262
e-mail: sales@jumo.co.uk
Internet: www.jumo.co.uk

JUMO Process Control, Inc.
8 Technology Boulevard
Canastota, NY 13032, USA
Phone: 315-697-JUMO
1-800-554-JUMO
Fax: 315-697-5867
e-mail: info@jumo.us
Internet: www.jumo.us

If a manufacturer wishes to issue certificates based on this standard, it is necessary that the testing devices involved in production can be traced back to recognized national standards.

Traceability to a national standard means that in the checking of a testing device, the actual measurements are documented so that they can be traced back to legal instrument standards. In Germany, the PTB (Physikalisch-Technische-Bundesanstalt) lays down the national standards and compares them with the results from other organizations so that the representation of important parameters such as temperature can be ensured uniformly by physical means throughout the world.

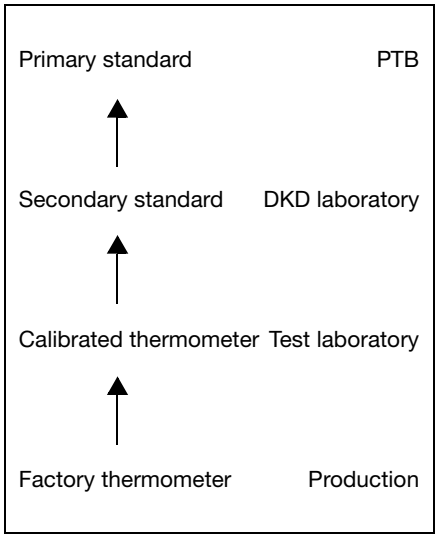

Fig. 21: Traceability

Because of the large demand for such calibrated devices, the government laboratories are found to have insufficient capacity and industry has therefore established and supports special calibration laboratories. These laboratories, including the **JUMO DKD Laboratory for Temperature 9501**, are linked to the German Calibration Service (DKD) and are subordinate to the national PTB laboratory for instrumental aspects. This ensures that the measuring devices used in a DKD laboratory can be traced back unequivocally to the national standards, and therefore also to the thermometers used there.

Safety note
All welded joints on thermometers and pockets are monitored through a fundamental quality assurance system according to DIN 85 63, Part 113. Special safety regulations apply to the "Mandatory monitored area" (e.g. pressure vessels) according to Section 24 of the German Trade Regulations. In cases where the customer specifies such an application, the welding is monitored according to EN 287 and EN 288.

Pressure loading for temperature probes
The pressure resistance of protection fittings, such as are used for electric thermometers, depends largely on the different process parameters.
These include:
- temperature
- pressure
- flow velocity
- vibration

In addition, physical properties, such as material, fitting length, diameter and type of process connection have to be taken into account.

The diagrams below are taken from DIN 43 763 and show the load limit for the different basic types in relation to the temperature and the fitting length, as well as the flow velocity, temperature and medium.

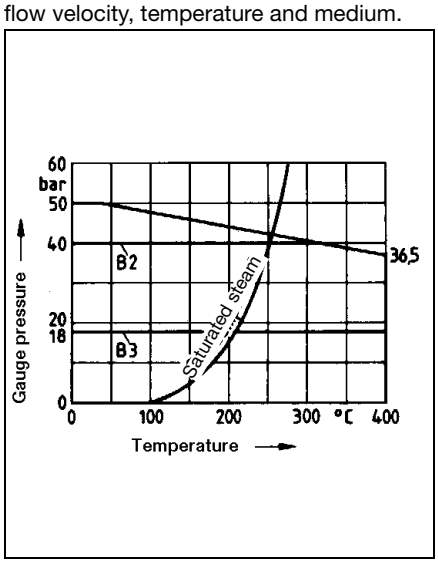

Fig. 22: Pressure loading for Form B protection tubes

stainless steel 1.4571
velocity up to 25m/sec in air
velocity up to 3m/sec in water

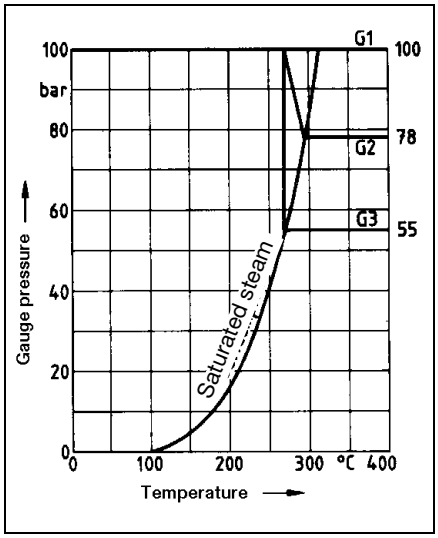

Fig. 23: Pressure loading for Form G protection tubes

stainless steel 1.4571
velocity up to 40m/sec in air
velocity up to 4m/sec in water

JUMO GmbH & Co. KG
Delivery address: Mackenrodtstraße 14, 36039 Fulda, Germany
Postal address: 36035 Fulda, Germany
Phone: +49 661 6003-0
Fax: +49 661 6003-607
e-mail: mail@jumo.net
Internet: www.jumo.net

JUMO Instrument Co. Ltd.
JUMO House
Temple Bank, Riverway
Harlow, Essex CM 20 2TT, UK
Phone: +44 1279 635533
Fax: +44 1279 635262
e-mail: sales@jumo.co.uk
Internet: www.jumo.co.uk

JUMO Process Control, Inc.
8 Technology Boulevard
Canastota, NY 13032, USA
Phone: 315-697-JUMO
1-800-554-JUMO
Fax: 315-697-5867
e-mail: info@jumo.us
Internet: www.jumo.us

As explained in the standard, the values indicated are guide values, which have to be individually examined for the specific application. Slight differences in the measurement conditions may suffice to destroy the protection tube.
If, when ordering an electric thermometer, it is required that the protection fitting be checked, the load type and the limit values have to be specified.

Fig. 24 shows the load limits (guide values) for different tube dimensions on a variety of additional thermometer designs. The maximum pressure loading of cylindrical protection tubes is shown in relation to the wall thickness with different tube diameters.
The data refer to protection tubes in stainless steel 1.4571, 100mm fitting length, 10m/sec flow velocity in air, or 4m/sec in water, and a temperature range from -20 to +100°C. A safety factor of 1.8 has been taken into account. For higher temperatures or different materials, the maximum pressure loading has to be reduced by the percentage values given in the table.

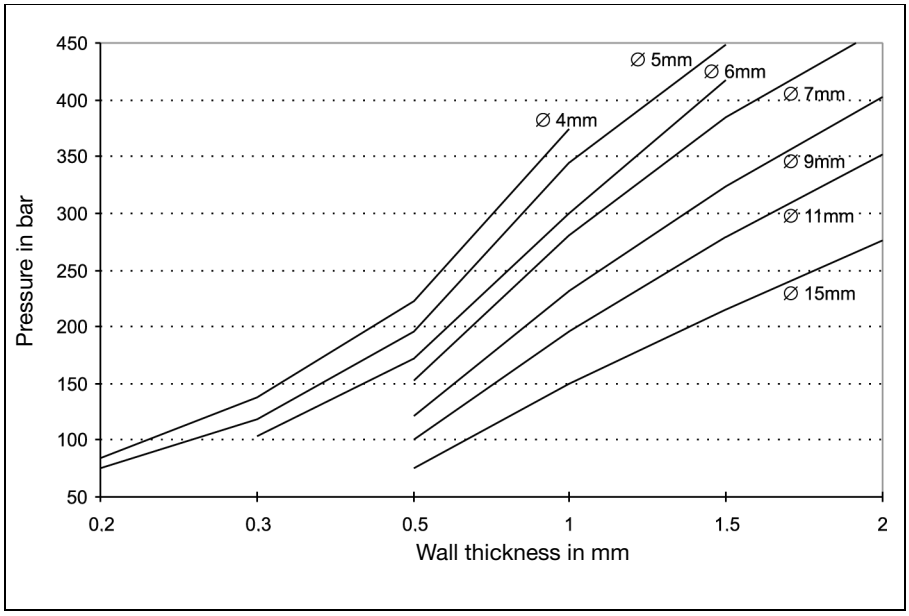

Fig. 24: Load limits on protection tubes, for various tube dimensions

Material	Temperature	Reduction
CrNi 1.4571	up to +200°C	-10%
CrNi 1.4571	up to +300°C	-20%
CrNi 1.4571	up to +400°C	-25%
CrNi 1.4571	up to +500°C	-30%
CuZn 2.0401	up to +100°C	-15%
CuZn 2.0401	up to +175°C	-60%

JUMO GmbH & Co. KG
Delivery address: Mackenrodtstraße 14, 36039 Fulda, Germany
Postal address: 36035 Fulda, Germany
Phone: +49 661 6003-0
Fax: +49 661 6003-607
e-mail: mail@jumo.net
Internet: www.jumo.net

JUMO Instrument Co. Ltd.
JUMO House
Temple Bank, Riverway
Harlow, Essex CM 20 2TT, UK
Phone: +44 1279 635533
Fax: +44 1279 635262
e-mail: sales@jumo.co.uk
Internet: www.jumo.co.uk

JUMO Process Control, Inc.
8 Technology Boulevard
Canastota, NY 13032, USA
Phone: 315-697-JUMO
1-800-554-JUMO
Fax: 315-697-5867
e-mail: info@jumo.us
Internet: www.jumo.us

Pressure test for thermometer protection fittings

The welded protection fittings of JUMO thermometers are subjected to a leakage test or a pressure test, depending on the construction of the protection fitting.

Thermometers which are manufactured to DIN or to application-specific guidelines (chemical or petrochemical plant, pressure vessel regulation, steam boilers) require different pressure tests according to the specific application.

If the thermometers are to be manufactured to such standards or guidelines, then the required tests or standards and/or guidelines have to be specified when ordering.

Scope of test
Tests can be carried out on each individual protection fitting and documented with a test report or acceptance certificate to EN 10 204 (at extra cost).

Type of test
Tests can be performed on protection fittings up to a fitting length of 1050mm with flange connection DN25 or screw connection up to 1" thread size.

The following tests can be carried out:

Test type	Test medium	Pressure range	Test duration
Leakage test	helium	vacuum	10sec
Pressure test I	nitrogen	1 — 50bar	10sec
Pressure test II	water	50 — 300bar	10sec

Leakage test
A vacuum is produced inside the protection tube. From the outside, helium is applied to the protection fitting. If there is a leak in the protection tube, helium will penetrate and will be recognized through analysis. A leakage rate is determined by the rise in pressure (leakage rate > 1 x 10^{-6} l/bar).

Pressure test I
A positive pressure of nitrogen is applied to the protection tube from the outside. If there is a leak in the fitting, a volume flow will be produced inside the protection tube, which will be recognized.

Pressure test II
Water pressure is applied to the protection tube from the outside. The pressure must remain constant for a certain length of time. If this is not the case, the protection fitting has a leak.

Qualified welding processes for the production of protection tubes for thermometers

In addition to using perfect materials, it is the joining technique which, in the end, determines the mechanical stability and quality of the protection fittings. This is why the welding techniques at JUMO comply with the European Standards EN 287 and EN 288. Manual welding is carried out by qualified welders according to EN 287. Automatic welding processes are qualified by a WPS (welding instruction) to EN 288.

The following table provides an overview of the qualified welding processes:

	WIG welding	
Material	**manual**	**automatic**
W11, W11 with W01-W04 to EN 287	Tube diameter 2 — 30mm Wall thickness 0.75 — 5.6mm	Tube diameter 5 — 10mm Wall thickness 0.5 — 1.0mm

Table. 2: Qualified welding processes

Based on this experience, our welders can also join different materials and dimensions.

Laser beam welding is employed for wall thicknesses of less than 0.6mm, which is monitored by a laser beam specialist according to guideline DSV 1187.

On customers' request, material test certificates can be issued at extra cost. Likewise, special tests and treatments can be carried out, which are calculated according to the extent of the work, as set out in various application guidelines. This includes X-ray examinations, crack test (dye penetration test), thermal treatment, special cleaning processes and markings.

JUMO GmbH & Co. KG
Delivery address: Mackenrodtstraße 14, 36039 Fulda, Germany
Postal address: 36035 Fulda, Germany
Phone: +49 661 6003-0
Fax: +49 661 6003-607
e-mail: mail@jumo.net
Internet: www.jumo.net

JUMO Instrument Co. Ltd.
JUMO House
Temple Bank, Riverway
Harlow, Essex CM 20 2TT, UK
Phone: +44 1279 635533
Fax: +44 1279 635262
e-mail: sales@jumo.co.uk
Internet: www.jumo.co.uk

JUMO Process Control, Inc.
8 Technology Boulevard
Canastota, NY 13032, USA
Phone: 315-697-JUMO
1-800-554-JUMO
Fax: 315-697-5867
e-mail: info@jumo.us
Internet: www.jumo.us

Reference values according to EN 60 751 (ITS 90)

in ohms, for Pt100 temperature sensors, in 1°C steps

°C	-0	-1	-2	-3	-4	-5	-6	-7	-8	-9
-200	18.520	-	-	-	-	-	-	-	-	-
-190	22.825	22.397	21.967	21.538	21.108	20.677	20.247	19.815	19.384	18.952
-180	27.096	26.671	26.245	25.819	25.392	24.965	24.538	24.110	23.682	23.254
-170	31.335	30.913	30.490	30.067	29.643	29.220	28.796	28.371	27.947	27.552
-160	35.543	35.124	34.704	34.284	33.864	33.443	33.022	32.601	32.179	31.757
-150	39.723	39.306	38.889	38.472	38.055	37.637	37.219	36.800	36.382	35.963
-140	43.876	43.462	43.048	42.633	42.218	41.803	41.388	40.972	40.556	40.140
-130	48.005	47.593	47.181	46.769	46.356	45.944	45.531	45.117	44.704	44.290
-120	52.110	51.700	51.291	50.881	50.470	50.060	49.649	49.239	48.828	48.416
-110	56.193	55.786	55.378	54.970	54.562	54.154	53.746	53.337	52.928	52.519
-100	60.256	59.850	59.445	59.039	58.633	58.227	57.821	57.414	57.007	56.600
- 90	64.300	63.896	63.492	63.088	62.684	62.280	61.876	61.471	61.066	60.661
- 80	68.325	67.924	67.552	67.120	66.717	66.315	65.912	65.509	65.106	64.703
- 70	72.335	71.934	71.534	71.134	70.733	70.332	69.931	69.530	69.129	68.727
- 60	76.328	75.929	75.530	75.131	74.732	74.333	73.934	73.534	73.134	72.735
- 50	80.306	79.909	79.512	79.114	78.717	78.319	77.921	77.523	77.125	76.726
- 40	84.271	83.875	83.479	83.083	82.687	82.290	81.894	81.497	81.100	80.703
- 30	88.222	87.827	87.432	87.038	86.643	86.248	85.853	85.457	85.062	84.666
- 20	92.160	91.767	91.373	90.980	90.586	90.192	89.798	89.404	89.010	88.616
- 10	96.086	95.694	95.302	94.909	94.517	94.124	93.732	93.339	92.946	92.553
0	100.000	99.609	99.218	98.827	98.436	98.044	97.653	97.261	96.870	96.478

°C	0	1	2	3	4	5	6	7	8	9
0	100.000	100.391	100.781	101.172	101.562	101.953	102.343	102.733	103.123	103.513
10	103.903	104.292	104.682	105.071	105.460	105.849	106.238	106.627	107.016	107.405
20	107.794	108.182	108.570	108.959	109.347	109.735	110.123	110.510	110.898	111.286
30	111.673	112.060	112.447	112.835	113.221	113.608	113.995	114.382	114.768	115.155
40	115.541	115.927	116.313	116.699	117.085	117.470	117.856	118.241	118.627	119.012
50	119.397	119.782	120.167	120.552	120.936	121.321	121.705	122.090	122.474	122.858
60	123.242	123.626	124.009	124.393	124.777	125.160	125.543	125.926	126.309	126.692
70	127.075	127.458	127.840	128.223	128.605	128.987	129.370	129.752	130.133	130.515
80	130.897	131.278	131.660	132.041	132.422	132.803	133.184	133.565	133.946	134.326
90	134.707	135.087	135.468	135.848	136.228	136.608	136.987	137.367	137.747	138.126
100	138.506	138.885	139.264	139.643	140.022	140.400	140.779	141.158	141.536	141.914
110	142.293	142.671	143.049	143.426	143.804	144.182	144.559	144.937	145.314	145.691
120	146.068	146.445	146.822	147.198	147.575	147.951	148.328	148.704	149.080	149.456
130	149.832	150.208	150.583	150.959	151.334	151.710	152.085	152.460	152.865	153.210
140	153.584	153.959	154.333	154.708	155.082	155.456	155.830	156.204	156.578	156.952
150	157.325	157.699	158.072	158.445	158.818	159.191	159.564	159.937	160.309	160.682
160	161.054	161.427	161.799	162.171	162.543	162.915	163.286	163.658	164.030	164.401
170	164.772	165.143	165.514	165.885	166.256	166.627	166.997	167.368	167.738	168.108
180	168.478	168.848	169.218	169.588	169.958	170.327	170.696	171.066	171.435	171.804
190	172.173	172.542	172.910	173.279	173.648	174.016	174.384	174.752	175.120	175.488
200	175.856	176.224	176.591	176.959	177.326	177.693	178.060	178.427	178.794	179.161
210	179.528	179.894	180.260	180.627	180.993	181.359	181.725	182.091	182.456	182.822
220	183.188	183.553	183.918	184.283	184.648	185.013	185.378	185.743	186.107	186.472
230	186.836	187.200	187.564	187.928	188.292	188.656	189.019	189.383	189.746	190.110
240	190.473	190.836	191.199	191.562	191.924	192.287	192.649	193.012	193.374	193.736
250	194.098	194.460	194.822	195.183	195.545	195.906	196.268	196.629	196.990	197.351
260	197.712	198.073	198.433	198.794	199.154	199.514	199.875	200.235	200.595	200.954
270	201.314	201.674	202.033	202.393	202.752	203.111	203.470	203.829	204.188	204.546
280	204.905	205.263	205.622	205.980	206.338	206.696	207.054	207.411	207.769	208.127
290	208.484	208.841	209.198	209.555	209.912	210.269	210.626	210.982	211.339	211.695
300	212.052	212.408	212.764	213.120	213.475	213.831	214.187	214.542	214.897	215.252

The reference values have been calculated according to the International Temperature Scale ITS 90.
(The reference values must be multiplied by the factor 5 or 10 for Pt500 or Pt1000 temperature sensors).

JUMO GmbH & Co. KG
Delivery address: Mackenrodtstraße 14, 36039 Fulda, Germany
Postal address: 36035 Fulda, Germany
Phone: +49 661 6003-0
Fax: +49 661 6003-607
e-mail: mail@jumo.net
Internet: www.jumo.net

JUMO Instrument Co. Ltd.
JUMO House
Temple Bank, Riverway
Harlow, Essex CM 20 2TT, UK
Phone: +44 1279 635533
Fax: +44 1279 635262
e-mail: sales@jumo.co.uk
Internet: www.jumo.co.uk

JUMO Process Control, Inc.
8 Technology Boulevard
Canastota, NY 13032, USA
Phone: 315-697-JUMO
1-800-554-JUMO
Fax: 315-697-5867
e-mail: info@jumo.us
Internet: www.jumo.us

Reference values according to EN 60 751 (ITS 90)

in ohms, for Pt100 temperature sensors, in 1°C steps

°C	0	1	2	3	4	5	6	7	8	9
310	215.608	215.962	216.317	216.672	217.027	217.381	217.736	218.090	218.444	218.798
320	219.152	219.506	219.860	220.213	220.567	220.920	221.273	221.626	221.979	222.332
330	222.685	223.038	223.390	223.743	224.095	224.447	224.799	225.151	225.503	225.855
340	226.206	226.558	226.909	227.260	227.612	227.963	228.314	228.664	229.015	229.366
350	229.716	230.066	230.417	230.767	231.117	231.467	231.816	232.166	232.516	232.865
360	233.214	233.564	233.913	234.262	234.610	234.959	235.308	235.656	236.005	236.353
370	236.701	237.049	237.397	237.745	238.093	238.440	238.788	239.135	239.482	239.829
380	240.176	240.523	240.870	241.217	241.563	241.910	242.256	242.602	242.948	243.294
390	243.640	243.986	244.331	244.677	245.022	245.367	245.713	246.058	246.403	246.747
400	247.092	247.437	247.781	248.125	248.470	248.814	249.158	249.502	249.845	250.189
410	250.533	250.876	251.219	251.562	251.906	252.248	252.591	252.934	253.277	253.619
420	253.962	254.304	254.646	254.988	255.330	255.672	256.013	256.355	256.696	257.038
430	257.379	257.720	258.061	258.402	258.743	259.083	259.424	259.764	260.105	260.445
440	260.785	261.125	261.465	261.804	262.144	262.483	262.823	263.162	263.501	263.840
450	264.179	264.518	264.857	265.195	265.534	265.872	266.210	266.548	266.886	267.224
460	267.562	267.900	268.237	268.574	268.912	269.249	269.586	269.923	270.260	270.597
470	270.933	271.270	271.606	271.942	272.278	272.614	272.950	273.286	273.622	273.957
480	274.293	274.628	274.963	275.298	275.633	275.968	276.303	276.638	276.972	277.307
490	277.641	277.975	278.309	278.643	278.977	279.311	279.644	279.978	280.311	280.644
500	280.978	281.311	281.643	281.976	282.309	282.641	282.974	283.306	283.638	283.971
510	284.303	284.634	284.966	285.298	285.629	285.961	286.292	286.623	286.954	287.285
520	287.616	287.947	288.277	288.608	288.938	289.268	289.599	289.929	290.258	290.588
530	290.918	291.247	291.577	291.906	292.235	292.565	292.894	293.222	293.551	293.880
540	294.208	294.537	294.865	295.193	295.521	295.849	296.177	296.505	296.832	297.160
550	297.487	297.814	298.142	298.469	298.795	299.122	299.449	299.775	300.102	300.428
560	300.754	301.080	301.406	301.732	302.058	302.384	302.709	303.035	303.360	303.685
570	304.010	304.335	304.660	304.985	305.309	305.634	305.958	306.282	306.606	306.930
580	307.254	307.578	307.902	308.225	308.549	308.872	309.195	309.518	309.841	310.164
590	310.487	310.810	311.132	311.454	311.777	312.099	312.421	312.743	313.065	313.386
600	313.708	314.029	314.351	314.672	314.993	315.314	315.635	315.956	316.277	316.597
610	316.918	317.238	317.558	317.878	318.198	318.518	318.838	319.157	319.477	319.796
620	320.116	320.435	320.754	321.073	321.391	321.710	322.029	322.347	322.666	322.984
630	323.302	323.620	323.938	324.256	324.573	324.891	325.208	325.526	325.843	326.160
640	326.477	326.794	327.110	327.427	327.744	328.060	328.376	328.692	329.008	329.324
650	329.640	329.956	330.271	330.587	330.902	331.217	331.533	331.848	332.162	332.477
660	332.792	333.106	333.421	333.735	334.049	334.363	334.677	334.991	335.305	335.619
670	335.932	336.246	336.559	336.872	337.185	337.498	337.811	338.123	338.436	338.748
680	339.061	339.373	339.685	339.997	340.309	340.621	340.932	341.244	341.555	341.867
690	342.178	342.489	342.800	343.111	343.422	343.732	344.043	344.353	344.663	344.973
700	345.284	345.593	345.903	346.213	346.522	346.832	347.141	347.451	347.760	348.069
710	348.378	348.686	348.995	349.303	349.612	349.920	350.228	350.536	350.844	351.152
720	351.460	351.768	352.075	352.382	352.690	352.997	353.304	353.611	353.918	354.224
730	354.531	354.837	355.144	355.450	355.756	256.062	356.368	356.674	356.979	357.285
740	357.590	357.896	358.201	358.506	358.811	359.116	359.420	359.725	360.029	360.334
750	360.638	360.942	361.246	361.550	361.854	362.158	362.461	362.765	363.068	363.371
760	363.674	363.977	364.280	364.583	364.886	365.188	365.491	365.793	366.095	366.397
770	366.699	367.001	367.303	367.604	367.906	368.207	368.508	368.810	369.111	369.412
780	369.712	370.013	370.314	370.614	370.914	371.215	371.515	371.815	372.115	372.414
790	372.714	373.013	373.313	373.612	373.911	374.210	374.509	374.808	375.107	375.406
800	375.704	376.002	376.301	376.599	376.897	377.195	377.493	377.790	378.088	378.385
810	378.683	378.980	379.277	379.574	379.871	380.167	380.464	380.761	381.057	381.353
820	381.650	381.946	382.242	382.537	382.833	383.129	383.424	383.720	384.015	384.310
830	384.605	384.900	385.195	385.489	385.784	386.078	386.373	386.667	386.961	387.255
840	387.549	387.843	388.136	388.430	388.723	389.016	389.310	389.603	389.896	390.188
850	390.481	-	-	-	-	-	-	-	-	-

The reference values have been calculated according to the International Temperature Scale ITS 90.
(The reference values must be multiplied by the factor 5 or 10 for Pt500 or Pt1000 temperature sensors).

JUMO GmbH & Co. KG
Delivery address: Mackenrodtstraße 14, 36039 Fulda, Germany
Postal address: 36035 Fulda, Germany
Phone: +49 661 6003-0
Fax: +49 661 6003-607
e-mail: mail@jumo.net
Internet: www.jumo.net

JUMO Instrument Co. Ltd.
JUMO House
Temple Bank, Riverway
Harlow, Essex CM 20 2TT, UK
Phone: +44 1279 635533
Fax: +44 1279 635262
e-mail: sales@jumo.co.uk
Internet: www.jumo.co.uk

JUMO Process Control, Inc.
8 Technology Boulevard
Canastota, NY 13032, USA
Phone: 315-697-JUMO
1-800-554-JUMO
Fax: 315-697-5867
e-mail: info@jumo.us
Internet: www.jumo.us

Electrical Temperature Measurement

with thermocouples and resistance thermometers

Matthias Nau

Electrical temperature sensors have become indispensable components in modern automation, consumer goods and production technology. As a result of the rapid expansion of automation during recent years, they have become firmly established in industrial engineering.

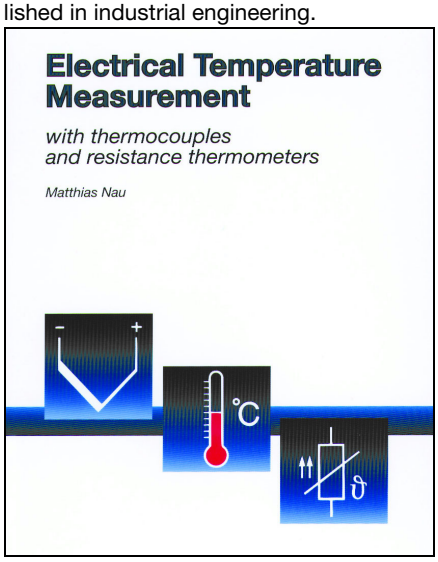

Fig. 25: Publication Electrical Temperature Measurement with thermocouples and resistance thermometers

In view of this large spectrum of available products for temperature measurement it is becoming ever more important for the user to select the one suitable for his application.

On 160 pages this publication deals with the theoretical fundamentals of electrical temperature measurement, the practical implementation of temperature sensors, their standardization, electrical connection, tolerances and types of construction.

In addition, it describes in detail the different fittings for electrical thermometers, their classification according to DIN standards, and the great variety of applications. An extensive section with tables for voltage and resistance series according to DIN and EN makes the book a valuable guide, both for the experienced practical engineer and the novice in the field of electrical temperature measurement.

You can order a copy by quoting Sales No. 90/00085081 or download from www.jumo.net.

Because of the high handling costs, schools, institutes and universities are asked to place a bulk order.

Error Analysis of a Temperature Measurement System

with worked examples

Gerd Scheller

This 44-page publication helps in the evaluation of measurement uncertainty, particularly through the worked examples in Chapter 3. Where problems arise, we are glad to discuss specific problems with our customers, and to give practical advice.

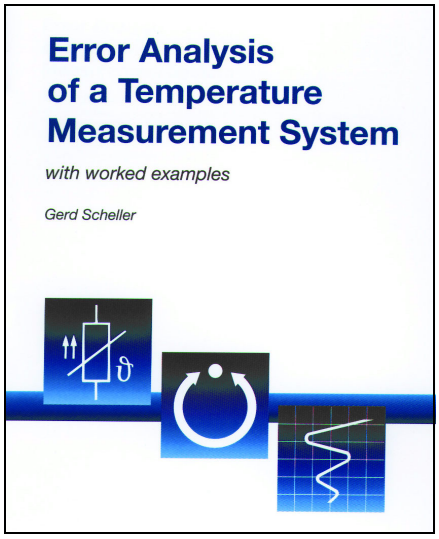

Fig. 26: Publication Error Analysis of a Temperature Measurement System, with worked examples

In order to be able to make comparable measurements, their quality must be expressed through specifying the measurement uncertainty. The ISO/BIPM “Guide to the Expression of Uncertainty in Measurement”, published in 1993 and usually referred to as GUM, introduced a standardized method for the determination and definition of measurement uncertainty. This method was adopted by calibration laboratories around the world. However, the application requires a certain level of mathematical understanding. Further chapters present the topic of measurement uncertainty in a simplified and easily understandable fashion to all users of temperature measurement systems.
Errors in the installation of the temperature sensors and the connections to the evaluation electronics lead to increased errors in measurement. To these must be added the measurement uncertainty components of the sensor and the evaluation electronics. The explanation of the various components of measurement uncertainty is followed by some worked examples.
Knowledge of the measurement uncertainty components and their magnitudes enable the user to reduce individual components through the choice of equipment or altered installation conditions. The decisive factor is always, which level of measurement uncertainty is acceptable for a specific application. For instance, if a standard specifies tolerance limits for the deviation of a temperature from a nominal value, the measurement uncertainty of the method used for temperature measurement should not be larger than 1/3 of the tolerance.

You can order a copy by quoting Sales No. 90/00415704 or download from www.jumo.net

Because of the high handling costs, schools, institutes and universities are asked to place a bulk order.

JUMO GmbH & Co. KG
Delivery address: Mackenrodtstraße 14, 36039 Fulda, Germany
Postal address: 36035 Fulda, Germany
Phone: +49 661 6003-0
Fax: +49 661 6003-607
e-mail: mail@jumo.net
Internet: www.jumo.net

JUMO Instrument Co. Ltd.
JUMO House
Temple Bank, Riverway
Harlow, Essex CM 20 2TT, UK
Phone: +44 1279 635533
Fax: +44 1279 635262
e-mail: sales@jumo.co.uk
Internet: www.jumo.co.uk

JUMO Process Control, Inc.
8 Technology Boulevard
Canastota, NY 13032, USA
Phone: 315-697-JUMO
1-800-554-JUMO
Fax: 315-697-5867
e-mail: info@jumo.us
Internet: www.jumo.us

German Calibration Service (DKD) at JUMO

Certification laboratory for temperature

Raised quality expectations, improved measurement technology and, of course, quality assurance systems, such as ISO 9000, make increasing demands on the documentation of processes and the monitoring of measuring devices.
In addition, there are increasing calls from customers for high product quality standards. Particularly stringent demands arise from ISO 9000 and EN 45 000, whereby measurements must be traceable to national or international standards. This provides the legal basis for obliging suppliers and manufacturers (of products that are subject to processes where temperature is relevant) to check all testing devices which can affect the product quality, before use or at specified intervals. Generally, this is done by calibrating or adjusting with certified devices. Because of the high demand for calibrated instruments and the large number of instruments to be calibrated, the state laboratories have insufficient capacity. The industry has therefore established and supports special calibration laboratories which are linked to the German Calibration Service (DKD) and subordinate to the PTB (Physikalisch-Technische-Bundesanstalt) for all aspects of instrumentation.

The certification laboratory of the German Calibration Service at JUMO has carried out calibration certification for temperature since 1992. This service provides fast and economical certification for everyone.
DKD calibration certificates can be issued for resistance thermometers, thermocouples, direct-reading measuring systems, data loggers and temperature block calibrators as well as temperature probes with built-in transmitter, within the measuring range -80 to +1100°C.
The traceability of the reference standard is the central issue here. All DKD calibration certificates are recognized as documents of traceability, without any further specifications. The DKD certification laboratory at JUMO has the identification DKD-K-09501-04 and is accredited to EN ISO/IEC 17 025.

You can order a brochure free of charge, either by ordering Publication PR 90029 or download from www.jumo.net

JUMO GmbH & Co. KG
Delivery address: Mackenrodtstraße 14
36039 Fulda, Germany
Postal address: 36035 Fulda, Germany
Phone: +49 661 6003-0
Fax: +49 661 6003-607
E-mail: mail@jumo.net
Internet: www.jumo.net

JUMO Instrument Co. Ltd.
JUMO House
Temple Bank, Riverway
Harlow, Essex CM20 2DY, UK
Phone: +44 1279 635533
Fax: +44 1279 635262
E-mail: sales@jumo.co.uk
Internet: www.jumo.co.uk

JUMO Process Control, Inc.
6733 Myers Road
East Syracuse, NY 13057, USA
Phone: 315-437-5866
1-800-554-5866
Fax: 315-437-5860
E-mail: info.us@jumo.net
Internet: www.jumousa.com

RTD Temperature Probe for Devices and Plants Tested/ Inspected According to DIN EN 14597

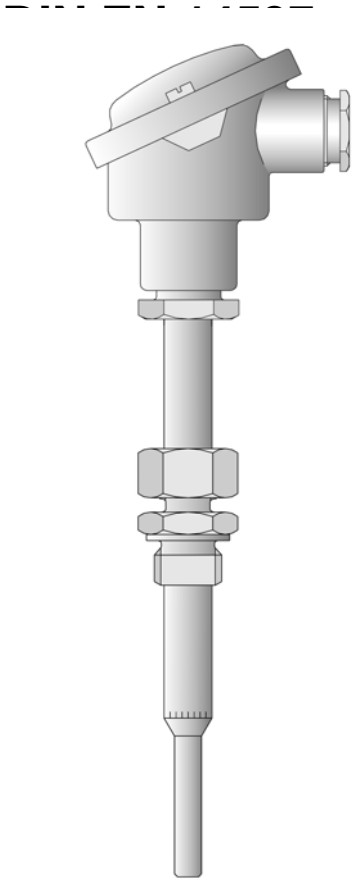

- **For heat transmission plants according to DIN 4754**
- **For temperatures of up to 700 °C**
- **As single, double, or triple RTD temperature probes**
- **For water, oil, or air**
- **For tested control and limitation devices**

The RTD temperature probes specified in this data sheet can be used in connection with temperature control and limitation devices tested/inspected according to DIN EN 14597 (DIN 3440) in heat transmission plants according to DIN 4754.

RTD temperature probes are the preferred choice for measuring temperatures in liquids and gases. Application areas include air conditioning and refrigeration technology as well as heating, furnace/kiln, and apparatus engineering.

Form B terminal heads are suitable for ambient temperatures up to 100 °C.

Protection tubes made of various materials protect the measuring insert against chemical influences and mechanical damage. The appropriate protection tube material is selected according to the conditions on site.

A Pt100 temperature sensor according to DIN EN 60751, class B is used in the measuring insert in a 2-wire-circuit as standard.

Changes to the described versions require new design approval.
Important information: state the part no. from price sheet 902006 when ordering!

JUMO GmbH & Co. KG
Delivery address: Mackenrodtstraße 14
36039 Fulda, Germany
Postal address: 36035 Fulda, Germany
Phone: +49 661 6003-0
Fax: +49 661 6003-607
E-mail: mail@jumo.net
Internet: www.jumo.net

JUMO Instrument Co. Ltd.
JUMO House
Temple Bank, Riverway
Harlow, Essex CM20 2DY, UK
Phone: +44 1279 635533
Fax: +44 1279 635262
E-mail: sales@jumo.co.uk
Internet: www.jumo.co.uk

JUMO Process Control, Inc.
6733 Myers Road
East Syracuse, NY 13057, USA
Phone: 315-437-5866
1-800-554-5866
Fax: 315-437-5860
E-mail: info.us@jumo.net
Internet: www.jumousa.com

Dimensions

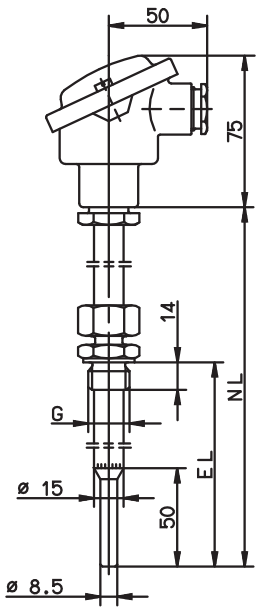

Pos. 1

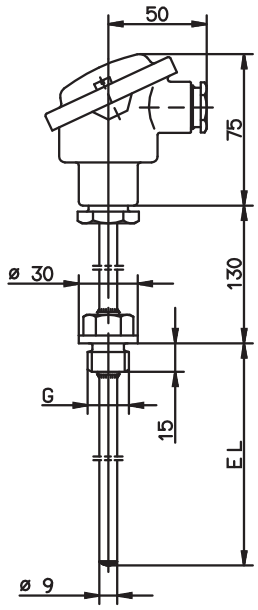

Pos. 2

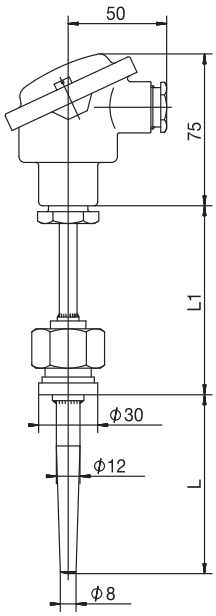

Pos. 3

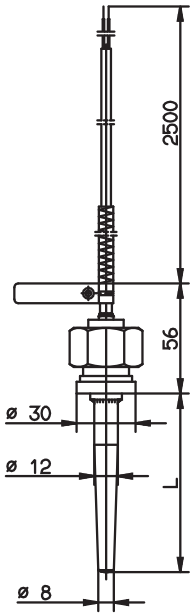

Pos. 4

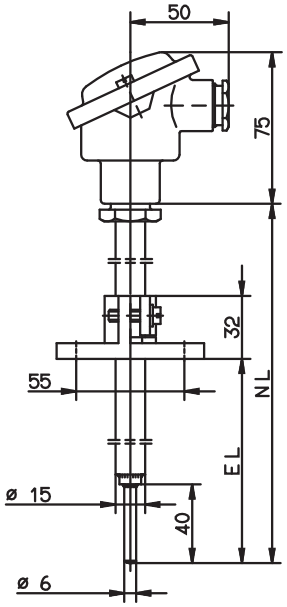

Pos. 5

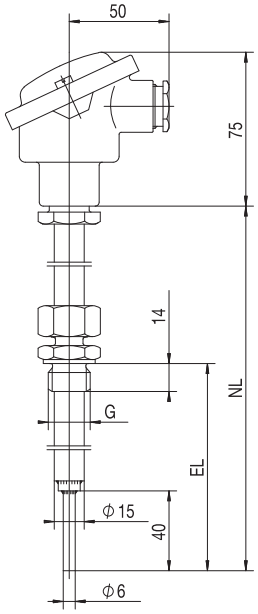

Pos. 6

JUMO GmbH & Co. KG
Delivery address: Mackenrodtstraße 14
36039 Fulda, Germany
Postal address: 36035 Fulda, Germany
Phone: +49 661 6003-0
Fax: +49 661 6003-607
E-mail: mail@jumo.net
Internet: www.jumo.net

JUMO Instrument Co. Ltd.
JUMO House
Temple Bank, Riverway
Harlow, Essex CM20 2DY, UK
Phone: +44 1279 635533
Fax: +44 1279 635262
E-mail: sales@jumo.co.uk
Internet: www.jumo.co.uk

JUMO Process Control, Inc.
6733 Myers Road
East Syracuse, NY 13057, USA
Phone: 315-437-5866
1-800-554-5866
Fax: 315-437-5860
E-mail: info.us@jumo.net
Internet: www.jumousa.com

Push-in RTD temperature probe with pipe screw connection and terminal head, according to DIN 43729, form B, M 24 × 1.5

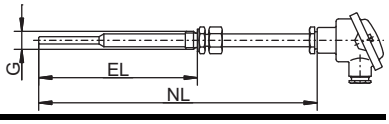

Insertion length EL in mm	Nominal length NL in mm	Thread G in inches	Temperature range in °C	Type up to February 28, 2013 1× Pt100	Type up to February 28, 2013 2× Pt100	Type as of March 01, 2013 Order code
Stainless steel protection tube X 6 CrNiMoTi 17 12 2, material-no. 1.4571						
65 to 670	710	G 1/2	-170 to +550	90.272-F03	-	902006/54-227-1003-1-15-710-254/000
65 to 670	710	G 1/2	-170 to +550	-	90.272-F02	902006/54-227-2003-1-15-710-254/000

Important information: Please observe the internal lead wire resistance with respect to the operating temperature; see the final page for the resistance values.

Operating media: water and oil
Operating pressure: max. 27 bar up to 100 °C, 20 bar up to 400 °C, pressureless as of 400 °C

Pos. 1

Versions only for connecting a
JUMO safetyM STB/STW Ex type 701155

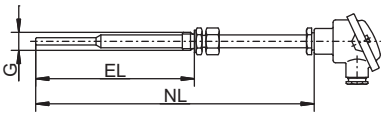

Insertion length EL in mm	Nominal length NL in mm	Thread G in inches	Temperature range in °C	1× Pt100	2× Pt100	Type Order code
Stainless steel protection tube X 6 CrNiMoTi 17 12 2, material-no. 1.4571						
65 to 670	710	G 1/2	-170 to +550	x	-	902006/54-227-1003-1-15-710-254/922
65 to 670	710	G 1/2	-170 to +550	-	x	902006/54-227-2003-1-15-710-254/922

Important information: Please observe the internal lead wire resistance with respect to the operating temperature; see the final page for the resistance values.

Operating media: water and oil
Operating pressure: max. 27 bar up to 100 °C, 20 bar up to 400 °C, pressureless as of 400 °C

Pos. 1

JUMO GmbH & Co. KG
Delivery address: Mackenrodtstraße 14
36039 Fulda, Germany
Postal address: 36035 Fulda, Germany
Phone: +49 661 6003-0
Fax: +49 661 6003-607
E-mail: mail@jumo.net
Internet: www.jumo.net

JUMO Instrument Co. Ltd.
JUMO House
Temple Bank, Riverway
Harlow, Essex CM20 2DY, UK
Phone: +44 1279 635533
Fax: +44 1279 635262
E-mail: sales@jumo.co.uk
Internet: www.jumo.co.uk

JUMO Process Control, Inc.
6733 Myers Road
East Syracuse, NY 13057, USA
Phone: 315-437-5866
1-800-554-5866
Fax: 315-437-5860
E-mail: info.us@jumo.net
Internet: www.jumousa.com

Screw-in RTD temperature probe according to DIN 43765, form B and terminal head according to DIN 43729, form B, M24 × 1.5

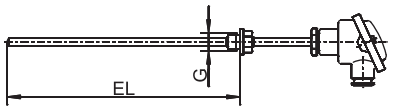

Insertion length EL in mm	Thread G in inches	Temperature range in °C	Type up to February 28, 2013 1× Pt100	Type up to February 28, 2013 2× Pt100	Type as of March 01, 2013 Order code
Steel protection tube St 35.8, material-no. 1.0305					
250	G 1/2	-170 to +480	90.239 ●	-	902006/10-226-1003-1-9-250-104/000 ●
250	G 1/2	-170 to +480	-	90D239	902006/10-226-2003-1-9-250-104/000
Stainless steel protection tube X 6 CrNiMoTi 17 12 2, material-no. 1.4571					
100	G 1/2	-40 to +400	902006/10-402-1003	-	902006/10-402-1003-1-9-100-104/000
150	G 1/2	-40 to +400	x	-	902006/10-402-1003-1-9-150-104/000
200	G 1/2	-40 to +400	x	-	902006/10-402-1003-1-9-200-104/000
100	G 1/2	-40 to +400	-	902006/10-402-2003	902006/10-402-2003-1-9-100-104/000
150	G 1/2	-40 to +400	-	x	902006/10-402-2003-1-9-150-104/000
200	G 1/2	-40 to +400	-	x	902006/10-402-2003-1-9-200-104/000

Operating media: water and oil
Operating pressure: max. 35 bar up to 100 °C, 20 bar up to 400 °C, pressureless as of 400 °C

● Available from stock.

Pos. 2

Versions only for connecting a
JUMO safetyM STB/STW Ex type 701155

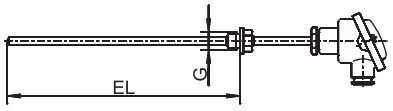

Insertion length EL in mm	Thread G in inches	Temperature range in °C	1× Pt100	2× Pt100	Type Order code
Steel protection tube St 35.8, material-no. 1.0305					
250	G 1/2	-170 to +480	x	-	902006/10-226-1003-1-9-250-104/922
250	G 1/2	-170 to +480	-	x	902006/10-226-2003-1-9-250-104/922
Stainless steel protection tube X 6 CrNiMoTi 17 12 2, material-no. 1.4571					
100	G 1/2	-40 to +400	x	-	902006/10-402-1003-1-9-100-104/922
150	G 1/2	-40 to +400	x	-	902006/10-402-1003-1-9-150-104/922
200	G 1/2	-40 to +400	x	-	902006/10-402-1003-1-9-200-104/922
100	G 1/2	-40 to +400	-	x	902006/10-402-2003-1-9-100-104/922
150	G 1/2	-40 to +400	-	x	902006/10-402-2003-1-9-150-104/922
200	G 1/2	-40 to +400	-	x	902006/10-402-2003-1-9-200-104/922

Operating media: water and oil
Operating pressure: max. 35 bar up to 100 °C, 20 bar up to 400 °C, pressureless as of 400 °C

Pos. 2

JUMO GmbH & Co. KG
Delivery address: Mackenrodtstraße 14
36039 Fulda, Germany
Postal address: 36035 Fulda, Germany
Phone: +49 661 6003-0
Fax: +49 661 6003-607
E-mail: mail@jumo.net
Internet: www.jumo.net

JUMO Instrument Co. Ltd.
JUMO House
Temple Bank, Riverway
Harlow, Essex CM20 2DY, UK
Phone: +44 1279 635533
Fax: +44 1279 635262
E-mail: sales@jumo.co.uk
Internet: www.jumo.co.uk

JUMO Process Control, Inc.
6733 Myers Road
East Syracuse, NY 13057, USA
Phone: 315-437-5866
1-800-554-5866
Fax: 315-437-5860
E-mail: info.us@jumo.net
Internet: www.jumousa.com

Screw-in RTD temperature probe with weld-in sleeve and terminal head according to DIN 43729, form B, M24 × 1.5

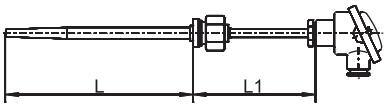

Insertion length[a] EL in mm	Length L in mm	Length L1 in mm	Temperature range in °C	Type up to February 28, 2013 1× Pt100	Type up to February 28, 2013 2× Pt100	Type up to February 28, 2013 3× Pt100	Type as of March 01, 2013 Order code
Steel welding shoulder 15 Mo 3, material-no. 1.5415 Steel protection tube St 35.8, material-no. 1.0305							
100	80	96	-40 to +480	90.239-F01	-	-	902006/53-507-1003-1-12-100-815/000
160	140	96	-40 to +480	90.239-F11	-	-	902006/53-507-1003-1-12-160-815/000
190	170	146	-40 to +400	90.239-F03	-	-	902006/53-505-1003-1-12-190-815/000
220	200	96	-40 to +480	90.239-F21 ●	-	-	902006/53-507-1003-1-12-220-815/000 ●
100	80	96	-40 to +480	-	90.239-F02 ●	-	902006/53-507-2003-1-12-100-815/000 ●
160	140	96	-40 to +480	-	90.239-F12	-	902006/53-507-2003-1-12-160-815/000
190	170	146	-40 to +400	-	90D239-F03 ●	-	902006/53-505-2003-1-12-190-815/000 ●
220	200	96	-40 to +480	-	902006/ 53-507-2003 ●	-	902006/53-507-2003-1-12-220-815/000 ●
100	80	96	-40 to +400	-	-	90.239-F07	902006/53-505-3003-1-12-100-815/000
160	140	96	-40 to +400	-	-	90.239-F17	902006/53-505-3003-1-12-160-815/000
220	200	96	-40 to +400	-	-	90.239-F27	902006/53-505-3003-1-12-220-815/000

Operating media: water and oil

Operating pressure: max. 103 bar up to 100 °C, 30 bar up to 480 °C

● Available from stock. Pos. 3

[a] Insertion length of the RTD temperature probe

Versions only for connecting a JUMO safetyM STB/STW Ex type 701155

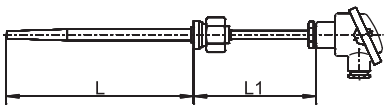

Insertion length[a] EL in mm	Length L in mm	Length L1 in mm	Temperature range in °C	1× Pt100	2× Pt100	3× Pt100	Type Order code
Steel welding shoulder 15 Mo 3, material-no. 1.5415 Steel protection tube St 35.8, material-no. 1.0305							
100	80	96	-40 to +480	x	-	-	902006/53-507-1003-1-12-100-815/922
160	140	96	-40 to +480	x	-	-	902006/53-507-1003-1-12-160-815/922
190	170	146	-40 to +400	x	-	-	902006/53-505-1003-1-12-190-815/922
220	200	96	-40 to +480	x	-	-	902006/53-507-1003-1-12-220-815/922
100	80	96	-40 to +480	-	x	-	902006/53-507-2003-1-12-100-815/922
160	140	96	-40 to +480	-	x	-	902006/53-507-2003-1-12-160-815/922
190	170	146	-40 to +400	-	x	-	902006/53-505-2003-1-12-190-815/922
220	200	96	-40 to +480	-	x	-	902006/53-507-2003-1-12-220-815/922
100	80	96	-40 to +400	-	-	x	902006/53-505-3003-1-12-100-815/922
160	140	96	-40 to +400	-	-	x	902006/53-505-3003-1-12-160-815/922
220	200	96	-40 to +400	-	-	x	902006/53-505-3003-1-12-220-815/922

Operating media: water and oil

Operating pressure: max. 103 bar up to 100 °C, 30 bar up to 480 °C

Pos. 3

[a] Insertion length of the RTD temperature probe

JUMO GmbH & Co. KG
Delivery address: Mackenrodtstraße 14
36039 Fulda, Germany
Postal address: 36035 Fulda, Germany
Phone: +49 661 6003-0
Fax: +49 661 6003-607
E-mail: mail@jumo.net
Internet: www.jumo.net

JUMO Instrument Co. Ltd.
JUMO House
Temple Bank, Riverway
Harlow, Essex CM20 2DY, UK
Phone: +44 1279 635533
Fax: +44 1279 635262
E-mail: sales@jumo.co.uk
Internet: www.jumo.co.uk

JUMO Process Control, Inc.
6733 Myers Road
East Syracuse, NY 13057, USA
Phone: 315-437-5866
1-800-554-5866
Fax: 315-437-5860
E-mail: info.us@jumo.net
Internet: www.jumousa.com

Screw-in RTD temperature probe with weld-in sleeve and stainless steel braided 0.35 mm² connecting cable and anti-kink protection

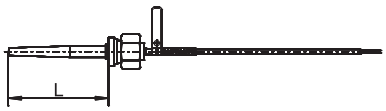

Insertion length[a] EL in mm	Length L in mm	Temperature range in °C	Type up to February 28, 2013 1× Pt100	Type as of March 01, 2013 Order code
Steel welding shoulder 15 Mo 3, material-no. 1.5415 Steel protection tube St 35.8, material-no. 1.0305				
100	80	-170 to +480	90.280-F32	902006/40-226-1003-1-12-100-815/000
160	140	-170 to +480	90.280-F31	902006/40-226-1003-1-12-160-815/000
220	200	-170 to +480	90.280-F30	902006/40-226-1003-1-12-220-815/000

Operating media: water and oil
Operating pressure: max. 103 bar up to 100 °C, 30 bar up to 480 °C

Pos. 4

[a] Insertion length of the RTD temperature probe

Versions only for connecting a
JUMO safetyM STB/STW Ex type 701155

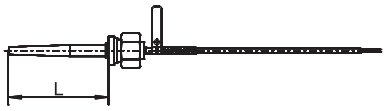

Insertion length[a] EL in mm	Length L in mm	Temperature range in °C	1× Pt100	Type Order code
Steel welding shoulder 15 Mo 3, material-no. 1.5415 Steel protection tube St 35.8, material-no. 1.0305				
100	80	-170 to +480	x	902006/40-226-1003-1-12-100-815/922
160	140	-170 to +480	x	902006/40-226-1003-1-12-160-815/922
220	200	-170 to +480	x	902006/40-226-1003-1-12-220-815/922

Operating media: water and oil
Operating pressure: max. 103 bar up to 100 °C, 30 bar up to 480 °C

Pos. 4

[a] Insertion length of the RTD temperature probe

JUMO GmbH & Co. KG
Delivery address: Mackenrodtstraße 14
36039 Fulda, Germany
Postal address: 36035 Fulda, Germany
Phone: +49 661 6003-0
Fax: +49 661 6003-607
E-mail: mail@jumo.net
Internet: www.jumo.net

JUMO Instrument Co. Ltd.
JUMO House
Temple Bank, Riverway
Harlow, Essex CM20 2DY, UK
Phone: +44 1279 635533
Fax: +44 1279 635262
E-mail: sales@jumo.co.uk
Internet: www.jumo.co.uk

JUMO Process Control, Inc.
6733 Myers Road
East Syracuse, NY 13057, USA
Phone: 315-437-5866
1-800-554-5866
Fax: 315-437-5860
E-mail: info.us@jumo.net
Internet: www.jumousa.com

Push-in RTD temperature probe with displaceable stop flange and terminal head according to DIN 43729, form B, M24 × 1.5

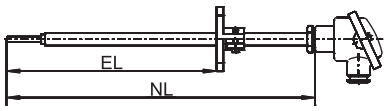

Insertion length EL in mm	Nominal length NL in mm	Temperature range in °C	Type up to February 28, 2013 1× Pt100	Type up to February 28, 2013 2× Pt100	Type as of March 01, 2013 Order code
Stainless steel protection tube X 6 CrNiMoTi 17 12 2, material-no. 1.4571					
50 to 460	500	-170 to +700	x	-	902006/65-228-1003-1-15-500-668/000
50 to 670	710	-170 to +700	x	-	902006/65-228-1003-1-15-710-668/000
50 to 960	1000	-170 to +700	x	-	902006/65-228-1003-1-15-1000-668/000
50 to 460	500	-170 to +700	-	90.271-F01	902006/65-228-2003-1-15-500-668/000 ●
50 to 670	710	-170 to +700	-	90.272-F01	902006/65-228-2003-1-15-710-668/000
50 to 960	1000	-170 to +700	-	90.273-F01	902006/65-228-2003-1-15-1000-668/000

Important information: Please observe the internal lead wire resistance with respect to the operating temperature; see the final page for the resistance values.

Operating medium: air

● Available from stock.

Pos. 5

Versions only for connecting a JUMO safetyM STB/STW Ex type 701155

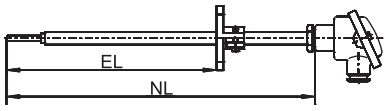

Insertion length EL in mm	Nominal length NL in mm	Temperature range in °C	1× Pt100	2× Pt100	Type Order code
Stainless steel protection tube X 6 CrNiMoTi 17 12 2, material-no. 1.4571					
50 to 460	500	-170 to +700	x	-	902006/65-228-1003-1-15-500-668/922
50 to 670	710	-170 to +700	x	-	902006/65-228-1003-1-15-710-668/922
50 to 960	1000	-170 to +700	x	-	902006/65-228-1003-1-15-1000-668/922
50 to 460	500	-170 to +700	-	x	902006/65-228-2003-1-15-500-668/922
50 to 670	710	-170 to +700	-	x	902006/65-228-2003-1-15-710-668/922
50 to 960	1000	-170 to +700	-	x	902006/65-228-2003-1-15-1000-668/922

Important information: Please observe the internal lead wire resistance with respect to the operating temperature; see the final page for the resistance values.

Operating medium: air

Pos. 5

JUMO GmbH & Co. KG
Delivery address: Mackenrodtstraße 14
36039 Fulda, Germany
Postal address: 36035 Fulda, Germany
Phone: +49 661 6003-0
Fax: +49 661 6003-607
E-mail: mail@jumo.net
Internet: www.jumo.net

JUMO Instrument Co. Ltd.
JUMO House
Temple Bank, Riverway
Harlow, Essex CM20 2DY, UK
Phone: +44 1279 635533
Fax: +44 1279 635262
E-mail: sales@jumo.co.uk
Internet: www.jumo.co.uk

JUMO Process Control, Inc.
6733 Myers Road
East Syracuse, NY 13057, USA
Phone: 315-437-5866
1-800-554-5866
Fax: 315-437-5860
E-mail: info.us@jumo.net
Internet: www.jumousa.com

Screw-in RTD temperature probe with pipe screw connection and terminal head, according to DIN 43729, form B, M 24 × 1.5

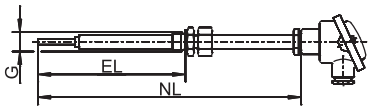

Insertion length EL in mm	Thread G in inches	Nominal length NL in mm	Temperature range in °C	Type up to February 28, 2013 1× Pt100	Type up to February 28, 2013 2× Pt100	Type as of March 01, 2013 Order code
Stainless steel protection tube X 6 CrNiMoTi 17 12 2, material-no. 1.4571						
50 to 460	G 1/2	500	-170 to +700	x	-	902006/55-228-1003-1-15-500-254/000
50 to 670	G 1/2	710	-170 to +700	x	-	902006/55-228-1003-1-15-710-254/000
50 to 960	G 1/2	1000	-170 to +700	x	-	902006/55-228-1003-1-15-1000-254/000
50 to 460	G 1/2	500	-170 to +700	-	x	902006/55-228-2003-1-15-500-254/000 ●
50 to 670	G 1/2	710	-170 to +700	-	x	902006/55-228-2003-1-15-710-254/000
50 to 960	G 1/2	1000	-170 to +700	-	x	902006/55-228-2003-1-15-1000-254/000

Important information: Please observe the internal lead wire resistance with respect to the operating temperature; see the final page for the resistance values.

Operating medium: air
● Available from stock.

Pos. 6

Versions only for connecting a
JUMO safetyM STB/STW Ex type 701155

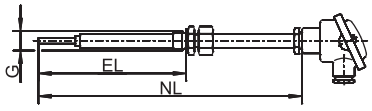

Insertion length EL in mm	Thread G in inches	Nominal length NL in mm	Temperature range in °C	1× Pt100	2× Pt100	Type Order code
Stainless steel protection tube X 6 CrNiMoTi 17 12 2, material-no. 1.4571						
50 to 460	G 1/2	500	-170 to +700	x	-	902006/55-228-1003-1-15-500-254/922
50 to 670	G 1/2	710	-170 to +700	x	-	902006/55-228-1003-1-15-710-254/922
50 to 960	G 1/2	1000	-170 to +700	x	-	902006/55-228-1003-1-15-1000-254/922
50 to 460	G 1/2	500	-170 to +700	-	x	902006/55-228-2003-1-15-500-254/922
50 to 670	G 1/2	710	-170 to +700	-	x	902006/55-228-2003-1-15-710-254/922
50 to 960	G 1/2	1000	-170 to +700	-	x	902006/55-228-2003-1-15-1000-254/922

Important information: Please observe the internal lead wire resistance with respect to the operating temperature; see the final page for the resistance values.

Operating medium: air

Pos. 6

JUMO GmbH & Co. KG
Delivery address: Mackenrodtstraße 14
36039 Fulda, Germany
Postal address: 36035 Fulda, Germany
Phone: +49 661 6003-0
Fax: +49 661 6003-607
E-mail: mail@jumo.net
Internet: www.jumo.net

JUMO Instrument Co. Ltd.
JUMO House
Temple Bank, Riverway
Harlow, Essex CM20 2DY, UK
Phone: +44 1279 635533
Fax: +44 1279 635262
E-mail: sales@jumo.co.uk
Internet: www.jumo.co.uk

JUMO Process Control, Inc.
6733 Myers Road
East Syracuse, NY 13057, USA
Phone: 315-437-5866
1-800-554-5866
Fax: 315-437-5860
E-mail: info.us@jumo.net
Internet: www.jumousa.com

Allocation list of temperature probes to the respective JUMO devices

For connection to...
JUMO safetyM STB/STW type 701150
The temperature probes are suitable for use according to DIN EN 14597.
Based on the test report from TÜV-Nord no. SAS-110-2006TB-2.

Temperature probes for air

Type as of March 01, 2013 Order code	Type up to February 28, 2013	Measuring probe	Temperature range in °C	Weld-in sleeve
902006/65-228-1003-1-15-500-668/000	-	1× Pt100	-170 to +700	-
902006/65-228-1003-1-15-710-668/000	-	1× Pt100	-170 to +700	-
902006/65-228-1003-1-15-1000-668/000	-	1× Pt100	-170 to +700	-
902006/65-228-2003-1-15-500-668/000	90.271-F01	2× Pt100	-170 to +700	-
902006/65-228-2003-1-15-710-668/000	90.272-F01	2× Pt100	-170 to +700	-
902006/65-228-2003-1-15-1000-668/000	90.273-F01	2× Pt100	-170 to +700	-
902006/55-228-1003-1-15-500-254/000	-	1× Pt100	-170 to +700	-
902006/55-228-1003-1-15-710-254/000	-	1× Pt100	-170 to +700	-
902006/55-228-1003-1-15-1000-254/000	-	1× Pt100	-170 to +700	-
902006/55-228-2003-1-15-500-254/000	-	2× Pt100	-170 to +700	-
902006/55-228-2003-1-15-710-254/000	-	2× Pt100	-170 to +700	-
902006/55-228-2003-1-15-1000-254/000	-	2× Pt100	-170 to +700	-

Temperature probes for water and oil

Type as of March 01, 2013 Order code	Type up to February 28, 2013	Measuring probe	Temperature range in °C	Weld-in sleeve
902006/54-227-1003-1-15-710-254/000	90.272-F03	1× Pt100	-170 to +550	-
902006/54-227-2003-1-15-710-254/000	90.272-F02	2× Pt100	-170 to +550	-
902006/10-226-1003-1-9-250-104/000	90.239	1× Pt100	-170 to +480	-
902006/10-226-2003-1-9-250-104/000	90D239	2× Pt100	-170 to +480	-
902006/10-402-1003-1-9-100-104/000	902006/10-402-1003	1× Pt100	-40 to +400	-
902006/10-402-1003-1-9-150-104/000	-	1× Pt100	-40 to +400	-
902006/10-402-1003-1-9-200-104/000	-	1× Pt100	-40 to +400	-
902006/10-402-2003-1-9-100-104/000	902006/10-402-2003	2× Pt100	-40 to +400	-
902006/10-402-2003-1-9-150-104/000	-	2× Pt100	-40 to +400	-
902006/10-402-2003-1-9-200-104/000	-	2× Pt100	-40 to +400	-
902006/53-507-1003-1-12-100-815/000	90.239-F01	1× Pt100	-40 to +480	x
902006/53-507-1003-1-12-160-815/000	90.239-F11	1× Pt100	-40 to +480	x
902006/53-505-1003-1-12-190-815/000	90.239-F03	1× Pt100	-40 to +400	x
902006/53-507-1003-1-12-220-815/000	90.239-F21	1× Pt100	-40 to +480	x
902006/53-507-2003-1-12-100-815/000	90.239-F02	2× Pt100	-40 to +480	x
902006/53-507-2003-1-12-160-815/000	90.239-F12	2× Pt100	-40 to +480	x
902006/53-505-2003-1-12-190-815/000	90D239-F03	2× Pt100	-40 to +400	x
902006/53-507-2003-1-12-220-815/000	902006/53-507-2003	2× Pt100	-40 to +480	x
902006/53-505-3003-1-12-100-815/000	90.239-F07	3× Pt100	-40 to +400	x
902006/53-505-3003-1-12-160-815/000	90.239-F17	3× Pt100	-40 to +400	x
902006/53-505-3003-1-12-220-815/000	90.239-F27	3× Pt100	-40 to +400	x
902006/40-226-1003-1-12-100-815/000	90.280-F32	1× Pt100	-170 to +480	x
902006/40-226-1003-1-12-160-815/000	90.280-F31	1× Pt100	-170 to +480	x
902006/40-226-1003-1-12-220-815/000	90.280-F30	1× Pt100	-170 to +480	x

JUMO GmbH & Co. KG
Delivery address: Mackenrodtstraße 14
36039 Fulda, Germany
Postal address: 36035 Fulda, Germany
Phone: +49 661 6003-0
Fax: +49 661 6003-607
E-mail: mail@jumo.net
Internet: www.jumo.net

JUMO Instrument Co. Ltd.
JUMO House
Temple Bank, Riverway
Harlow, Essex CM20 2DY, UK
Phone: +44 1279 635533
Fax: +44 1279 635262
E-mail: sales@jumo.co.uk
Internet: www.jumo.co.uk

JUMO Process Control, Inc.
6733 Myers Road
East Syracuse, NY 13057, USA
Phone: 315-437-5866
1-800-554-5866
Fax: 315-437-5860
E-mail: info.us@jumo.net
Internet: www.jumousa.com

For connection to...
JUMO safetyM TB/TW type 701160
JUMO safetyM TB/TW 08 type 701170
JUMO DICON 500 type 703570
JUMO DICON 501 type 703580
The temperature probes are suitable for use according to DIN EN 14597.
Based on the test report from TÜV-Süd no. C-T 1487-00/12.

Temperature probes for air

Type as of March 01, 2013 Order code	Type up to February 28, 2013	Measuring probe	Temperature range in °C	Weld-in sleeve
902006/65-228-1003-1-15-500-668/000	-	1× Pt100	-170 to +700	-
902006/65-228-1003-1-15-710-668/000	-	1× Pt100	-170 to +700	-
902006/65-228-1003-1-15-1000-668/000	-	1× Pt100	-170 to +700	-
902006/65-228-2003-1-15-500-668/000	90.271-F01	2× Pt100	-170 to +700	-
902006/65-228-2003-1-15-710-668/000	90.272-F01	2× Pt100	-170 to +700	-
902006/65-228-2003-1-15-1000-668/000	90.273-F01	2× Pt100	-170 to +700	-
902006/55-228-1003-1-15-500-254/000	-	1× Pt100	-170 to +700	-
902006/55-228-1003-1-15-710-254/000	-	1× Pt100	-170 to +700	-
902006/55-228-1003-1-15-1000-254/000	-	1× Pt100	-170 to +700	-
902006/55-228-2003-1-15-500-254/000	-	2× Pt100	-170 to +700	-
902006/55-228-2003-1-15-710-254/000	-	2× Pt100	-170 to +700	-
902006/55-228-2003-1-15-1000-254/000	-	2× Pt100	-170 to +700	-

Temperature probes for water and oil

Type as of March 01, 2013 Order code	Type up to February 28, 2013	Measuring probe	Temperature range in °C	Weld-in sleeve
902006/54-227-1003-1-15-710-254/000	90.272-F03	1× Pt100	-170 to +550	-
902006/54-227-2003-1-15-710-254/000	90.272-F02	2× Pt100	-170 to +700	-
902006/10-226-1003-1-9-250-104/000	90.239	1× Pt100	-170 to +480	-
902006/10-226-2003-1-9-250-104/000	90D239	2× Pt100	-170 to +480	-
902006/10-402-1003-1-9-100-104/000	902006/10-402-1003	1× Pt100	-40 to +400	-
902006/10-402-1003-1-9-150-104/000	-	1× Pt100	-40 to +400	-
902006/10-402-1003-1-9-200-104/000	-	1× Pt100	-40 to +400	-
902006/10-402-2003-1-9-100-104/000	902006/10-402-2003	2× Pt100	-40 to +400	-
902006/10-402-2003-1-9-150-104/000	-	2× Pt100	-40 to +400	-
902006/10-402-2003-1-9-200-104/000	-	2× Pt100	-40 to +400	-
902006/53-507-1003-1-12-100-815/000	90.239-F01	1× Pt100	-40 to +480	x
902006/53-507-1003-1-12-160-815/000	90.239-F11	1× Pt100	-40 to +480	x
902006/53-505-1003-1-12-190-815/000	90.239-F03	1× Pt100	-40 to +400	x
902006/53-507-1003-1-12-220-815/000	90.239-F21	1× Pt100	-40 to +480	x
902006/53-507-2003-1-12-100-815/000	90.239-F02	2× Pt100	-40 to +480	x
902006/53-507-2003-1-12-160-815/000	90.239-F12	2× Pt100	-40 to +480	x
902006/53-505-2003-1-12-190-815/000	90D239-F03	2× Pt100	-40 to +400	x
902006/53-507-2003-1-12-220-815/000	902006/53-507-2003	2× Pt100	-40 to +480	x
902006/53-505-2003-1-12-100-815/000	90.239-F07	3× Pt100	-40 to +400	x
902006/53-505-3003-1-12-160-815/000	90.239-F17	3× Pt100	-40 to +400	x
902006/53-505-3003-1-12-220-815/000	90.239-F27	3× Pt100	-40 to +400	x
902006/40-226-1003-1-12-100-815/000	90.280-F32	1× Pt100	-170 to +480	x
902006/40-226-1003-1-12-160-815/000	90.280-F31	1× Pt100	-170 to +480	x
902006/40-226-1003-1-12-220-815/000	90.280-F30	1× Pt100	-170 to +480	x

JUMO GmbH & Co. KG
Delivery address: Mackenrodtstraße 14
36039 Fulda, Germany
Postal address: 36035 Fulda, Germany
Phone: +49 661 6003-0
Fax: +49 661 6003-607
E-mail: mail@jumo.net
Internet: www.jumo.net

JUMO Instrument Co. Ltd.
JUMO House
Temple Bank, Riverway
Harlow, Essex CM20 2DY, UK
Phone: +44 1279 635533
Fax: +44 1279 635262
E-mail: sales@jumo.co.uk
Internet: www.jumo.co.uk

JUMO Process Control, Inc.
6733 Myers Road
East Syracuse, NY 13057, USA
Phone: 315-437-5866
1-800-554-5866
Fax: 315-437-5860
E-mail: info.us@jumo.net
Internet: www.jumousa.com

For connection to...
JUMO safetyM STB/STW Ex type 701155
The temperature probes are suitable for use in potentially explosive areas according to DIN EN 14597.
Based on the test report from TÜV-Nord no. 12 203 556139.

Temperature probes for air

Type as of March 01, 2013 Order code	Type up to February 28, 2013	Measuring probe	Temperature range in °C	Weld-in sleeve
902006/65-228-1003-1-15-500-668/922	-	1× Pt100	-170 to +700	-
902006/65-228-1003-1-15-710-668/922	-	1× Pt100	-170 to +700	-
902006/65-228-1003-1-15-1000-668/922	-	1× Pt100	-170 to +700	-
902006/65-228-2003-1-15-500-668/922	90.271-F01	2× Pt100	-170 to +700	-
902006/65-228-2003-1-15-710-668/922	90.272-F01	2× Pt100	-170 to +700	-
902006/65-228-2003-1-15-1000-668/922	90.273-F01	2× Pt100	-170 to +700	-
902006/55-228-1003-1-15-500-254/922	-	1× Pt100	-170 to +700	-
902006/55-228-1003-1-15-710-254/922	-	1× Pt100	-170 to +700	-
902006/55-228-1003-1-15-1000-254/922	-	1× Pt100	-170 to +700	-
902006/55-228-2003-1-15-500-254/922	-	2× Pt100	-170 to +700	-
902006/55-228-2003-1-15-710-254/922	-	2× Pt100	-170 to +700	-
902006/55-228-2003-1-15-1000-254/922	-	1× Pt100	-170 to +700	-

Temperature probes for water and oil

Type as of March 01, 2013 Order code	Type up to February 28, 2013	Measuring probe	Temperature range in °C	Weld-in sleeve
902006/54-227-1003-1-15-710-254/922	90.272-F03	1× Pt100	-170 to +550	-
902006/54-227-2003-1-15-710-254/922	90.272-F02	2× Pt100	-170 to +700	-
902006/10-226-1003-1-9-250-104/922	90.239	1× Pt100	-170 to +480	-
902006/10-226-2003-1-9-250-104/922	90D239	2× Pt100	-170 to +480	-
902006/10-402-1003-1-9-100-104/922	902006/10-402-1003	1× Pt100	-40 to +400	-
902006/10-402-1003-1-9-150-104/922	-	1× Pt100	-40 to +400	-
902006/10-402-1003-1-9-200-104/922	-	1× Pt100	-40 to +400	-
902006/10-402-2003-1-9-100-104/922	902006/10-402-2003	2× Pt100	-40 to +400	-
902006/10-402-2003-1-9-150-104/922	-	2× Pt100	-40 to +400	-
902006/10-402-2003-1-9-200-104/922	-	2× Pt100	-40 to +400	-
902006/53-507-1003-1-12-100-815/922	90.239-F01	1× Pt100	-40 to +480	x
902006/53-507-1003-1-12-160-815/922	90.239-F11	1× Pt100	-40 to +480	x
902006/53-505-1003-1-12-190-815/922	90.239-F03	1× Pt100	-40 to +400	x
902006/53-507-1003-1-12-220-815/922	90.239-F21	1× Pt100	-40 to +480	x
902006/53-507-2003-1-12-100-815/922	90.239-F02	2× Pt100	-40 to +480	x
902006/53-507-2003-1-12-160-815/922	90.239-F12	2× Pt100	-40 to +480	x
902006/53-505-2003-1-12-190-815/922	90D239-F03	2× Pt100	-40 to +400	x
902006/53-507-2003-1-12-220-815/922	902006/53-507-2003	2× Pt100	-40 to +480	x
902006/53-505-3003-1-12-100-815/922	90.239-F07	3× Pt100	-40 to +400	x
902006/53-505-3003-1-12-160-815/922	90.239-F17	3× Pt100	-40 to +400	x
902006/53-505-3003-1-12-220-815/922	90.239-F27	3× Pt100	-40 to +400	x
902006/40-226-1003-1-12-100-815/922	90.280-F32	1× Pt100	-170 to +480	x
902006/40-226-1003-1-12-160-815/922	90.280-F31	1× Pt100	-170 to +480	x
902006/40-226-1003-1-12-220-815/922	90.280-F30	1× Pt100	-170 to +480	x

JUMO GmbH & Co. KG
Delivery address: Mackenrodtstraße 14
36039 Fulda, Germany
Postal address: 36035 Fulda, Germany
Phone: +49 661 6003-0
Fax: +49 661 6003-607
E-mail: mail@jumo.net
Internet: www.jumo.net

JUMO Instrument Co. Ltd.
JUMO House
Temple Bank, Riverway
Harlow, Essex CM20 2DY, UK
Phone: +44 1279 635533
Fax: +44 1279 635262
E-mail: sales@jumo.co.uk
Internet: www.jumo.co.uk

JUMO Process Control, Inc.
6733 Myers Road
East Syracuse, NY 13057, USA
Phone: 315-437-5866
1-800-554-5866
Fax: 315-437-5860
E-mail: info.us@jumo.net
Internet: www.jumousa.com

Temperature errors

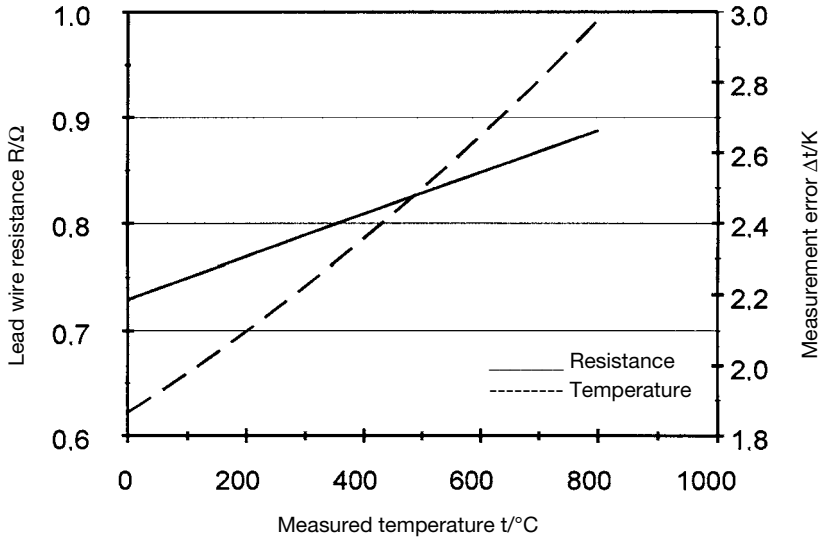

The internal lead wire causes a systematic measurement error in the versions 902006/54 and 902006/65. This depends on both the nominal length (NL) as well as the measured temperature. In the table, the error is shown **per 100 mm insertion length (EL)** depending on the temperature measurement.

t/°C	R/Ω	Δt/K
0	0.73	1.87
100	0.75	1.98
200	0.77	2.09
300	0.79	2.22
400	0.81	2.35
500	0.83	2.49
600	0.85	2.64
700	0.87	2.80
800	0.89	2.98

Lead wire resistance of a 0.5 mm NiCr wire **per 100 mm insertion length (EL)** (double wire length).
The specifications are to be viewed as reference values.

JUMO GmbH & Co. KG
Delivery address: Mackenrodtstraße 14
36039 Fulda, Germany
Postal address: 36035 Fulda, Germany
Phone: +49 661 6003-0
Fax: +49 661 6003-607
Email: mail@jumo.net
Internet: www.jumo.net

JUMO Instrument Co. Ltd.
JUMO House
Temple Bank, Riverway
Harlow, Essex CM 20 2DY, UK
Phone: +44 1279 63 55 33
Fax: +44 1279 62 50 29
Email: sales@jumo.co.uk
Internet: www.jumo.co.uk

JUMO Process Control, Inc.
6733 Myers Road
East Syracuse, NY 13057, USA
Phone: +1 315 437 5866
Fax: +1 315 437 5860
Email: info.us@jumo.net
Internet: www.jumousa.com

Screw-In RTD Temperature Probes with Terminal Head Form B

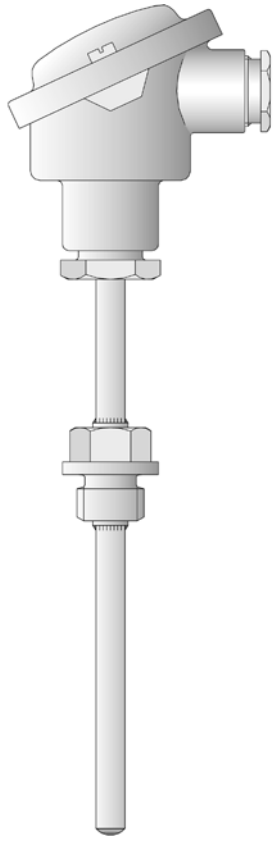

- **For temperatures from -50 to +600 °C**
- **With replaceable measuring insert**
- **As single or double RTD temperature probes**
- **Connection head form B, BUZ, BUZH, BBK**
- **Available with transmitter**

Screw-in RTD temperature probes are mainly used for measuring temperatures in fluids and gasses. A decisive selection criterion is the reliable sealing feature of this installation type with vacuum and with overpressure. The application areas are, among others, in the air conditioning technology and refrigeration engineering as well as the HVAC, kiln and apparatus engineering sector.
The connection head is suitable for temperatures up to +100 °C. The versions BUZ, BUZH and BBK are also available in addition to the standard connection head, form B.
A Pt100 temperature sensing element according to DIN EN 60751, class B in two-wire circuit is used as a measuring insert by default – versions with Pt500 or Pt1000 are also possible. Connection is available in three-wire or four-wire circuit as an option. A transmitter can be optionally integrated into the connection head.

Technical data

Terminal head	Form B DIN 43729, die-cast aluminum, M20 × 1.5; IP65, ambient temperature -40 to +100 °C Form BUZ, die-cast aluminum, M20 × 1.5; IP65, ambient temperature -40 to +100 °C Form BUZH, die-cast aluminum, M20 × 1.5; IP65, ambient temperature -40 to +100 °C Form BBK, plastic, M20 × 1.5; IP54, ambient temperature -30 to +130 °C Caution: reduced ambient temperature range when using transmitters, data sheets 707010, 707030, 707050, and 707060
Extension tube	Stainless steel 1.4571, length 130 mm
Process connection	Thread, stainless steel 1.4571 Thermowell, stainless steel 1.4571 or steel 1.7335
Thermowell	Stainless steel 1.4571, Ø 9 mm, Ø 11 mm, Ø 12 mm
Measuring insert	Replaceable, Pt100 temperature probe, DIN EN 60751, class B, two-wire circuit
Response times	$t_{0.9}$ approx. 50 s, in water 0.2 m/s, Ø 9 mm
Transmitter	Analog transmitter, 4 to 20 mA output, data sheet 707030 Analog transmitter, 0 to 10 V output, data sheet 707030 Programmable transmitter, 4 to 20 mA / 20 to 4 mA output, data sheet 707010 Programmable transmitter, 4 to 20 mA / 20 to 4 mA output and USB interface, data sheet 707050 Wtrans B, programmable head transmitter with radio transmission, data sheet 707060 (suitable Wtrans receivers, data sheet 902931)
Accessories	Thermowell, data sheet 909710

JUMO GmbH & Co. KG
Delivery address: Mackenrodtstraße 14
36039 Fulda, Germany
Postal address: 36035 Fulda, Germany
Phone: +49 661 6003-0
Fax: +49 661 6003-607
Email: mail@jumo.net
Internet: www.jumo.net

JUMO Instrument Co. Ltd.
JUMO House
Temple Bank, Riverway
Harlow, Essex CM 20 2DY, UK
Phone: +44 1279 63 55 33
Fax: +44 1279 62 50 29
Email: sales@jumo.co.uk
Internet: www.jumo.co.uk

JUMO Process Control, Inc.
6733 Myers Road
East Syracuse, NY 13057, USA
Phone: +1 315 437 5866
Fax: +1 315 437 5860
Email: info.us@jumo.net
Internet: www.jumousa.com

Dimensions

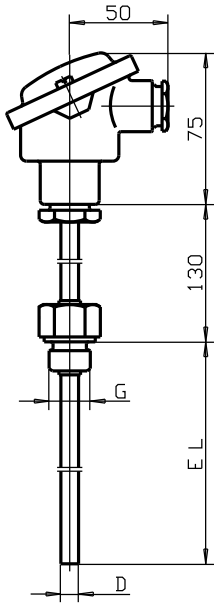

Basic type 902020/10

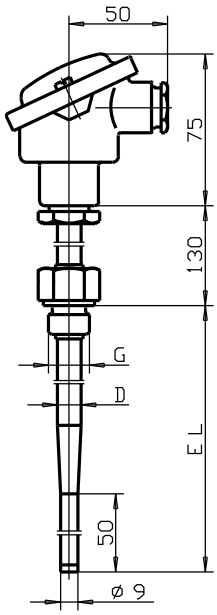

Basic type 902020/11

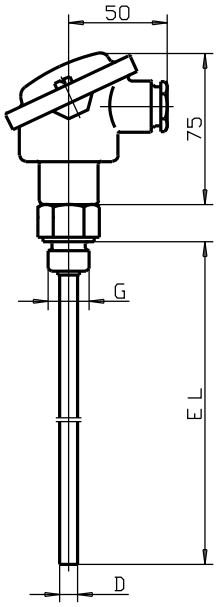

Basic type 902020/20

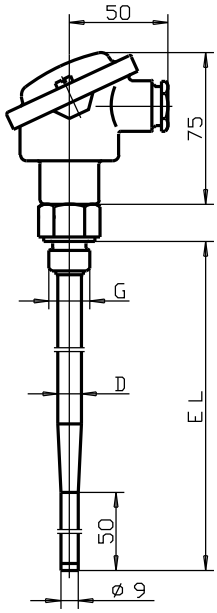

Basic type 902020/21

JUMO GmbH & Co. KG
Delivery address: Mackenrodtstraße 14
36039 Fulda, Germany
Postal address: 36035 Fulda, Germany
Phone: +49 661 6003-0
Fax: +49 661 6003-607
Email: mail@jumo.net
Internet: www.jumo.net

JUMO Instrument Co. Ltd.
JUMO House
Temple Bank, Riverway
Harlow, Essex CM 20 2DY, UK
Phone: +44 1279 63 55 33
Fax: +44 1279 62 50 29
Email: sales@jumo.co.uk
Internet: www.jumo.co.uk

JUMO Process Control, Inc.
6733 Myers Road
East Syracuse, NY 13057, USA
Phone: +1 315 437 5866
Fax: +1 315 437 5860
Email: info.us@jumo.net
Internet: www.jumousa.com

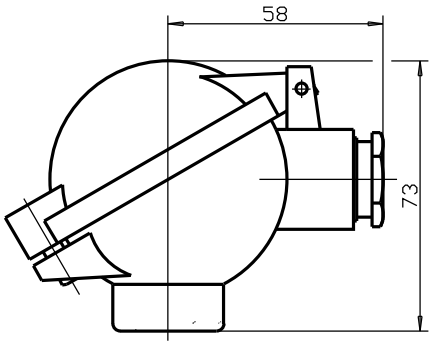

Terminal head form BUZ
extra code 320

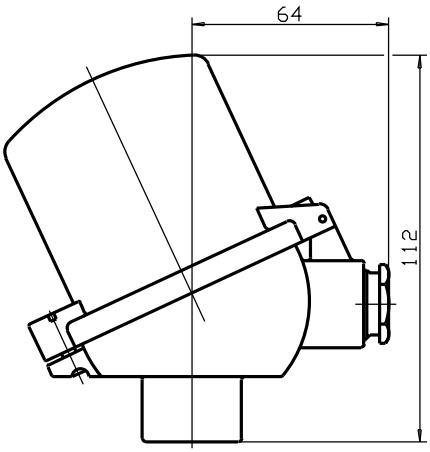

Terminal head form BUZH
extra code 321

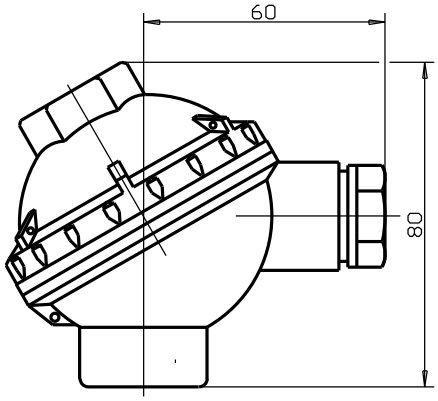

Connection head form BBK
extra code 322

JUMO GmbH & Co. KG
Delivery address: Mackenrodtstraße 14
36039 Fulda, Germany
Postal address: 36035 Fulda, Germany
Phone: +49 661 6003-0
Fax: +49 661 6003-607
Email: mail@jumo.net
Internet: www.jumo.net

JUMO Instrument Co. Ltd.
JUMO House
Temple Bank, Riverway
Harlow, Essex CM 20 2DY, UK
Phone: +44 1279 63 55 33
Fax: +44 1279 62 50 29
Email: sales@jumo.co.uk
Internet: www.jumo.co.uk

JUMO Process Control, Inc.
6733 Myers Road
East Syracuse, NY 13057, USA
Phone: +1 315 437 5866
Fax: +1 315 437 5860
Email: info.us@jumo.net
Internet: www.jumousa.com

Order specifications: Screw-in RTD temperature probe with form B connection head

(1) Basic type

902020/10 — Screw-in RTD temperature probes with extension tube and continuous thermowell

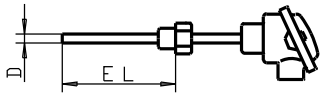

902020/11 — Screw-in RTD temperature probes with extension tube and stepped thermowell

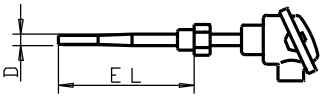

			(2) Operating temperature in °C
x	x	402	-50 to +400 °C (standard)
x	x	415	-50 to +600 °C
			(3) Measuring insert
x	x	1001	1× Pt100 in three-wire-circuit
x	x	1003	1× Pt100 in two-wire circuit
x	x	1011	1× Pt100 in four-wire circuit
x	x	2001	2× Pt100 in three-wire circuit
x	x	2003	2× Pt100 in two-wire circuit
			(4) Tolerance class according to DIN EN 60751
x	x	1	Class B (standard)
x	x	2	Class A
			(5) Thermowell diameter D in mm
x		9	Ø 9 mm
x		11	Ø 11 mm
	x	12	Ø 12 mm stepped down to Ø 9 mm
			(6) Fitting length EL in mm (EL 100 to 1000 mm, EL ≤ 700 mm for basic type 902020/11)
x	x	160	160 mm
	x	220	220 mm
x	x	250	250 mm
	x	280	280 mm
x	x	400	400 mm
x	x	...	Specification in plain text (50 mm steps)
			(7) Process connection
x	x	104	Screw-connection G 1/2
x	x	105	Screw-connection G 3/4
x	x	106	Screw connection G 1
			(8) Extra codes
x	x	000	No extra code
x	x	058	SIL and PL compatible
x	x	306	Extension tube 70 mm
x	x	320	Terminal head form BUZ
x	x	321	Terminal head form BUZH
x	x	322	Connection head form BBK
x	x	330	1× transmitter (analog), 4 to 20 mA[2] output, data sheet 707030
x	x	331	1× transmitter (programmable), 4 to 20 mA / 20 to 4 mA[3] output, data sheet 707010
x	x	333	1× transmitter (analog), 0 to 10V[2] output, data sheet 707030
x	x	334	2× transmitters (analog), 4 to 20 mA[2] output, data sheet 707030 (only with terminal head form BUZH)
x	x	335	2× transmitters (programmable), 4 to 20 mA / 20 to 4 mA[3] output, data sheet 707010 (only with terminal head form BUZH)
x	x	337	2× transmitters (analog), 0 to 10 V[2] output, data sheet 707030 (only with terminal head form BUZH)
x	x	550	1× transmitter (programmable), 4 to 20 mA / 20 to 4 mA[3] output and USB interface, data sheet 707050
x	x	551	2× transmitters (programmable), 4 to 20 mA / 20 to 4 mA[3] output and USB interface, data sheet 707050 (only with terminal head form BUZH)
x	x	859	1× Wtrans B, programmable head transmitter with radio transmission, data sheet 707060

	(1)		(2)		(3)		(4)		(5)		(6)		(7)		(8)	
Order code	[ ]	-	[ ]	-	[ ]	-	[ ]	-	[ ]	-	[ ]	-	[ ]	/	[ ]	,...[1]
Order example	902020/10	-	402	-	1001	-	1	-	11	-	250	-	106	/	000	

[1] List extra codes in sequence, separated by commas.
[2] Specify measuring range in plain text.
[3] Specify measuring range and output signal in plain text.

JUMO GmbH & Co. KG
Delivery address: Mackenrodtstraße 14
36039 Fulda, Germany
Postal address: 36035 Fulda, Germany
Phone: +49 661 6003-0
Fax: +49 661 6003-607
Email: mail@jumo.net
Internet: www.jumo.net

JUMO Instrument Co. Ltd.
JUMO House
Temple Bank, Riverway
Harlow, Essex CM 20 2DY, UK
Phone: +44 1279 63 55 33
Fax: +44 1279 62 50 29
Email: sales@jumo.co.uk
Internet: www.jumo.co.uk

JUMO Process Control, Inc.
6733 Myers Road
East Syracuse, NY 13057, USA
Phone: +1 315 437 5866
Fax: +1 315 437 5860
Email: info.us@jumo.net
Internet: www.jumousa.com

Order specifications: Screw-in RTD temperature probe with connection head form B

(1) **Basic type**

902020/20 — Screw-in RTD temperature probes without extension tube and continuous thermowell

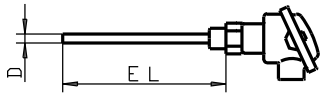

902020/21 — Screw-in RTD temperature probes without extension tube and stepped thermowell

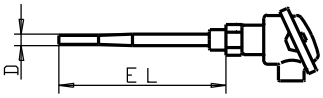

			(2) Operating temperature in °C
x	x	402	-50 to +400 °C (standard)
x	x	415	-50 to +600 °C
			(3) Measuring insert
x	x	1001	1× Pt100 in three-wire-circuit
x	x	1003	1× Pt100 in two-wire circuit
x	x	1011	1× Pt100 in four-wire circuit
x	x	2001	2× Pt100 in three-wire circuit
x	x	2003	2× Pt100 in two-wire circuit
			(4) Tolerance class according to DIN EN 60751
x	x	1	Class B (standard)
x	x	2	Class A
			(5) Thermowell diameter D in mm
x		9	Ø 9 mm
x		11	Ø 11 mm
	x	12	Ø 12 mm stepped down to Ø 9 mm
			(6) Fitting length EL in mm (EL 100 to 1000 mm, EL ≤ 700 mm for basic type 902020/21)
x	x	100	100 mm
x	x	160	160 mm
x	x	250	250 mm
x	x	400	400 mm
x	x	...	Specification in plain text (50 mm steps)
			(7) Process connection
x	x	104	Screw-connection G 1/2
x	x	105	Screw-connection G 3/4
x	x	106	Screw connection G 1
			(8) Extra codes
x	x	000	No extra code
x	x	058	SIL and PL compatible
x	x	320	Terminal head form BUZ
x	x	321	Terminal head form BUZH
x	x	322	Connection head form BBK
x	x	330	1× transmitter (analog), 4 to 20 mA[2] output, data sheet 707030
x	x	331	1× transmitter (programmable), 4 to 20 mA / 20 to 4 mA[3] output, data sheet 707010
x	x	333	1× transmitter (analog), 0 to 10 V[2] output, data sheet 707030
x	x	334	2× transmitters (analog), 4 to 20 mA[2] output, data sheet 707030 (only with terminal head form BUZH)
x	x	335	2× transmitters (programmable), 4 to 20 mA / 20 to 4 mA[3] output, data sheet 707010 (only with terminal head form BUZH)
x	x	337	2× transmitters (analog), 0 to 10 V[2] output, data sheet 707030 (only with terminal head form BUZH)
x	x	550	1× transmitter (programmable), 4 to 20 mA / 20 to 4 mA[3] output and USB interface, data sheet 707050
x	x	551	2× transmitters (programmable), 4 to 20 mA / 20 to 4 mA[3] output and USB interface, data sheet 707050 (only with terminal head form BUZH)
x	x	859	1× Wtrans B, programmable head transmitter with radio transmission, data sheet 707060

	(1)		(2)		(3)		(4)		(5)		(6)		(7)		(8)	
Order code	[ ]	-	[ ]	-	[ ]	-	[ ]	-	[ ]	-	[ ]	-	[ ]	/	[ ]	,...[1]
Order example	902020/20	-	402	-	1001	-	1	-	9	-	160	-	104	/	000	

[1] List extra codes in sequence, separated by commas.
[2] Specify measuring range in plain text.
[3] Specify measuring range and output signal in plain text.

JUMO GmbH & Co. KG
Delivery address: Mackenrodtstraße 14
36039 Fulda, Germany
Postal address: 36035 Fulda, Germany
Phone: +49 661 6003-0
Fax: +49 661 6003-607
Email: mail@jumo.net
Internet: www.jumo.net

JUMO Instrument Co. Ltd.
JUMO House
Temple Bank, Riverway
Harlow, Essex CM 20 2DY, UK
Phone: +44 1279 63 55 33
Fax: +44 1279 62 50 29
Email: sales@jumo.co.uk
Internet: www.jumo.co.uk

JUMO Process Control, Inc.
6733 Myers Road
East Syracuse, NY 13057, USA
Phone: +1 315 437 5866
Fax: +1 315 437 5860
Email: info.us@jumo.net
Internet: www.jumousa.com

Stock versions

Order code	Part no.
902020/10-402-1003-1-9-160-104/000	00055562
902020/10-402-1003-1-9-250-104/000	00055563
902020/10-402-1003-1-9-400-104/000	00055564
902020/10-402-2003-1-9-160-104/000	00055565
902020/10-402-2003-1-9-250-104/000	00055566
902020/10-402-2003-1-9-400-104/000	00055567
902020/10-402-1001-1-9-160-104/330 (0 to 100 °C)	00054616
902020/10-402-1001-1-9-160-104/330 (0 to 200 °C)	00087522
902020/10-402-1001-1-9-250-104/330 (0 to 200 °C)	00087527
902020/10-402-1001-1-9-400-104/331 (0 to 100 °C)	00335111

Accessories for programmable two-wire transmitter type 707010

Description	Part no.
PC interface with TTL/RS232 converter and adapter (socket connector)	00350260
PC interface with USB/TTL converter, adapter (socket connector) and adapter (pins)	00456352
Special programming (standard measuring range 0 to 100 °C)	-
Setup program on CD-ROM, multilingual	00378733

Accessories for programmable two-wire transmitter type 707050

Description	Part no.
Setup program on CD-ROM, multilingual	00574959
USB cable, A connector on Mini-B connector, length 3 m	00506252

Accessories for Wtrans B, programmable head transmitter with radio transmission Type 707060

Description	Part no.
Lithium battery 3.6 V, 2.2 Ah (size AA)	00547559
PC interface with USB/TTL converter, adapter (socket) and adapter (pins)	00456352
PC interface with TTL/RS232 converter and adapter (socket connector)	00350260
Setup program on CD-ROM, multilingual	00488887
Setup program including OnlineChart on CD-ROM, multilingual	00549067
OnlineChart activation	00549188

JUMO GmbH & Co. KG
Delivery address: Mackenrodtstraße 14, 36039 Fulda, Germany
Postal address: 36035 Fulda, Germany
Phone: +49 661 6003-0
Fax: +49 661 6003-607
e-mail: mail@jumo.net
Internet: www.jumo.net

JUMO Instrument Co. Ltd.
JUMO House
Temple Bank, Riverway
Harlow, Essex CM20 2DY, UK
Phone: +44 1279 635533
Fax: +44 1279 635262
e-mail: sales@jumo.co.uk
Internet: www.jumo.co.uk

JUMO Process Control, Inc.
8 Technology Boulevard
Canastota, NY 13032, USA
Phone: 315-697-JUMO
1-800-554-JUMO
Fax: 315-697-5867
e-mail: info@jumo.us
Internet: www.jumo.us

JUMO Etemp B

Screw-in RTD temperature probe with connection head form B for standard applications

- Temperature range from -50 to +400 °C
- With built-in measuring insert
- As single or double RTD temperature probes
- Terminal head form B or BUZ
- Available with transmitter

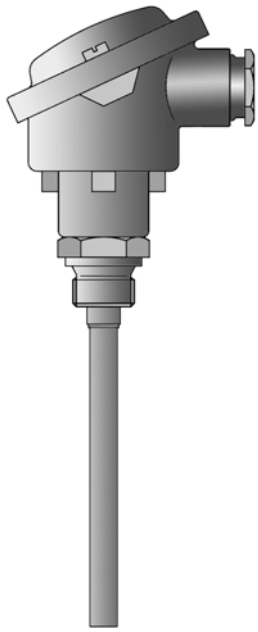

Basic type 902023/10

Brief description

Screw-in RTD temperature probes for standard applications are preferentially used for measuring temperatures in liquids and gases. A decisive selection criterion is the reliable sealing feature of this installation type with vacuum and with overpressure. The application areas are, among others, in the air conditioning technology and refrigeration engineering as well as the HVAC and apparatus engineering sector.

The connection head is suitable for ambient temperatures up to +100 °C. In addition to the standard connection head form B, design BUZ is also available.

The measuring insert is normally fitted with a Pt100 temperature sensor according to DIN EN 60751, Class B in 2-wire circuit; versions with Pt500 or Pt1000 temperature sensors can also be supplied, as well as 4-wire circuit connections. A transmitter can be optionally integrated into the connection head.

Technical data

Terminal head	Form B DIN EN 50446, die-cast aluminum, M 20x1.5; IP65, ambient temperature -40 to +100 °C Form BUZ, die-cast aluminum, M 20x1.5; IP65, ambient temperature -40 to +100 °C Reduced ambient temperature when using transmitters, data sheet 707030 and 707010
Process connection	thread, stainless steel 1.4571
Sheath	Stainless steel 1.4571, ∅ 6 mm, ∅ 8 mm
Measuring insert	Pt100 temperature sensor DIN EN 60751, cl. B, 2-wire circuit, built-in
Response times	$t_{0.5}$ = 5 s, $t_{0.9}$ = 14 s in water 0.4 m/s; ∅ 6 mm
Transmitter	Analog transmitter, output 4 to 20 mA, data sheet 707030 Analog transmitter, output 0 to 10 V, data sheet 707030 Programmable transmitter, output 4 to 20 mA/20 to 4 mA, data sheet 707010
Accessories	sheath, data sheet 909710

JUMO GmbH & Co. KG
Delivery address: Mackenrodtstraße 14, 36039 Fulda, Germany
Postal address: 36035 Fulda, Germany
Phone: +49 661 6003-0
Fax: +49 661 6003-607
e-mail: mail@jumo.net
Internet: www.jumo.net

JUMO Instrument Co. Ltd.
JUMO House
Temple Bank, Riverway
Harlow, Essex CM20 2DY, UK
Phone: +44 1279 635533
Fax: +44 1279 635262
e-mail: sales@jumo.co.uk
Internet: www.jumo.co.uk

JUMO Process Control, Inc.
8 Technology Boulevard
Canastota, NY 13032, USA
Phone: 315-697-JUMO
1-800-554-JUMO
Fax: 315-697-5867
e-mail: info@jumo.us
Internet: www.jumo.us

Dimensions

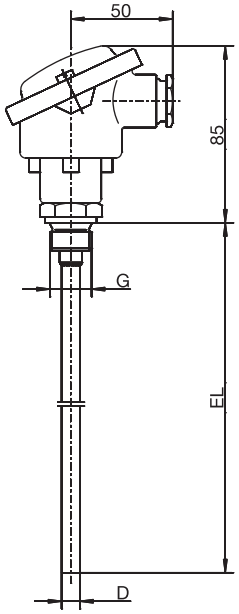

Basic type 902023/10

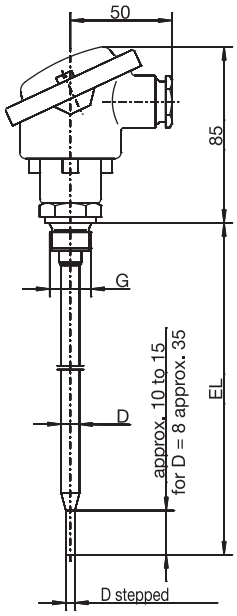

Basic type 902023/11

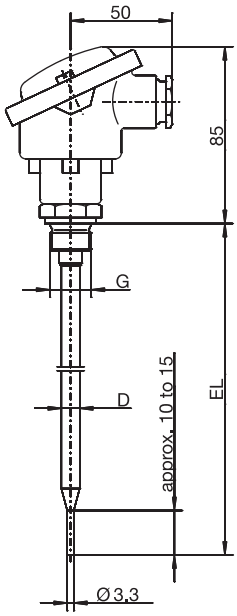

Basic type 902023/31

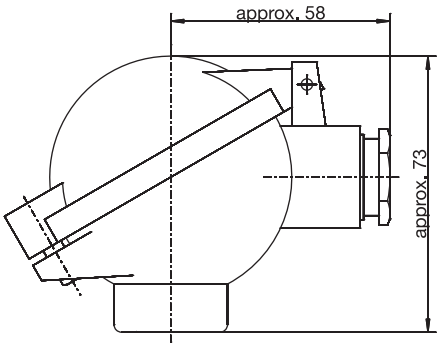

terminal head Form BUZ
Extra code 320

JUMO GmbH & Co. KG
Delivery address: Mackenrodtstraße 14, 36039 Fulda, Germany
Postal address: 36035 Fulda, Germany
Phone: +49 661 6003-0
Fax: +49 661 6003-607
e-mail: mail@jumo.net
Internet: www.jumo.net

JUMO Instrument Co. Ltd.
JUMO House
Temple Bank, Riverway
Harlow, Essex CM20 2DY, UK
Phone: +44 1279 635533
Fax: +44 1279 635262
e-mail: sales@jumo.co.uk
Internet: www.jumo.co.uk

JUMO Process Control, Inc.
8 Technology Boulevard
Canastota, NY 13032, USA
Phone: 315-697-JUMO
1-800-554-JUMO
Fax: 315-697-5867
e-mail: info@jumo.us
Internet: www.jumo.us

Order details

(1) Basic type

			902023/10	JUMO Etemp B Screw-in RTD temperature probes with terminal head form B and with continuous sheath
	x		902023/11	JUMO Etemp B Screw-in RTD temperature probes with terminal head form B and with stepped sheath (for ∅ 6 mm on ∅ 3.8 mm/for ∅ 8 mm on ∅ 6 mm)
		x	902023/31	JUMO Etemp B Screw-in RTD temperature probes with terminal head form B and with stepped sheath for air measurement

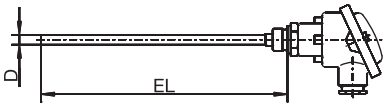

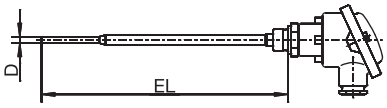

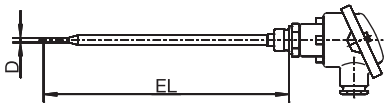

(2) Operating temperature in °C

x	x	x	380	-50 to +200 °C (standard)
x	x		386	-50 to +260 °C
x	x		402	-50 to +400 °C
x	x		647	-20 to +150 °C (only in connection with class B and 1x Pt100 in 2-wire circuit)

(3) Measuring insert

x	x	x	1003	1x Pt100 in 2-wire circuit
x	x	x	1011	1x Pt100 in 4-wire circuit
x	x	x	2003	2x Pt100 in 2-wire circuit

(4) Tolerance class as per DIN EN 60751

x	x	x	1	Class B (standard)
x	x	x	2	Class A
x	x	x	3	Class AA (1/3 DIN B)

(5) Sheath diameter D in mm

x	x	x	6	∅ 6 mm
x	x		8	∅ 8 mm

(6) Fitting length EL in mm (EL 50 to 1000 mm, max. 800 mm for basic types 902023/11 and 902023/31)

x			50	50 mm
x	x	x	100	100 mm
x	x	x	200	200 mm
x	x	x	...	Please specify in plain text (50 mm steps)

(7) Process connection

x	x	x	102	Screw connection G 1/4
x	x	x	103	Screw connection G 3/8
x	x	x	104	Screw connection G 1/2
x	x	x	126	Screw connection M 18x1.5
x	x	x	128	Screw connection M 20x1.5
x	x	x	144	Screw connection (thread) 1/2-14NPT

JUMO GmbH & Co. KG
Delivery address: Mackenrodtstraße 14, 36039 Fulda, Germany
Postal address: 36035 Fulda, Germany
Phone: +49 661 6003-0
Fax: +49 661 6003-607
e-mail: mail@jumo.net
Internet: www.jumo.net

JUMO Instrument Co. Ltd.
JUMO House
Temple Bank, Riverway
Harlow, Essex CM20 2DY, UK
Phone: +44 1279 635533
Fax: +44 1279 635262
e-mail: sales@jumo.co.uk
Internet: www.jumo.co.uk

JUMO Process Control, Inc.
8 Technology Boulevard
Canastota, NY 13032, USA
Phone: 315-697-JUMO
1-800-554-JUMO
Fax: 315-697-5867
e-mail: info@jumo.us
Internet: www.jumo.us

				(8)	Extra codes
x	x	x		000	none
x	x	x		320	terminal head Form BUZ
x	x	x		330	1x transmitter, analog output 4 to 20 mA[a], data sheet 707030
x	x	x		331	1x programmable transmitter, 4 to 20 mA output[b], data sheet 707010
x	x	x		333	1x transmitter, analog output 0 to 10 V[a], data sheet 707030

[a] Specify measuring range in plain text.
[b] Specify measuring range and output signal in plain text.

	(1)		(2)		(3)		(4)		(5)		(6)		(7)		(8)	
Order code		-		-		-		-		-		-		/		, ...[a]
Order example	902023/10	-	380	-	1003	-	1	-	6	-	100	-	104	/	000	

[a] State extra codes one after another, separated by commas.

Stock versions

(1)		(2)		(3)		(4)		(5)		(6)		(7)		(8)	Sales No.:
902023/10	-	380	-	1003	-	1	-	6	-	100	-	104	/	000	90/00543945
902023/10	-	380	-	1003	-	1	-	6	-	150	-	104	/	000	90/00542800
902023/10	-	380	-	1003	-	1	-	6	-	300	-	104	/	000	90/00542801
902023/10	-	402	-	1003	-	1	-	6	-	100	-	104	/	000	90/00543946
902023/10	-	402	-	1003	-	1	-	6	-	150	-	104	/	000	90/00542802
902023/10	-	402	-	1003	-	1	-	6	-	300	-	104	/	000	90/00542803
902023/10	-	402	-	1003	-	1	-	6	-	100	-	104	/	331(0 to 100 °C)	90/00544265
902023/31	-	380	-	1003	-	1	-	6	-	250	-	104	/	000	90/00542804

JUMO GmbH & Co. KG
Delivery address: Mackenrodtstraße 14,
36039 Fulda, Germany
Postal address: 36035 Fulda, Germany
Phone: +49 661 6003-0
Fax: +49 661 6003-607
e-mail: mail@jumo.net
Internet: www.jumo.net

JUMO Instrument Co. Ltd.
JUMO House
Temple Bank, Riverway
Harlow, Essex CM 20 2TT, UK
Phone: +44 1279 635533
Fax: +44 1279 635262
e-mail: sales@jumo.co.uk
Internet: www.jumo.co.uk

JUMO Process Control, Inc.
8 Technology Boulevard
Canastota, NY 13032, USA
Phone: 315-697-JUMO
1-800-554-JUMO
Fax: 315-697-5867
e-mail: info@jumo.us
Internet: www.jumo.us

Screw-in RTD temperature probe with terminal head form J

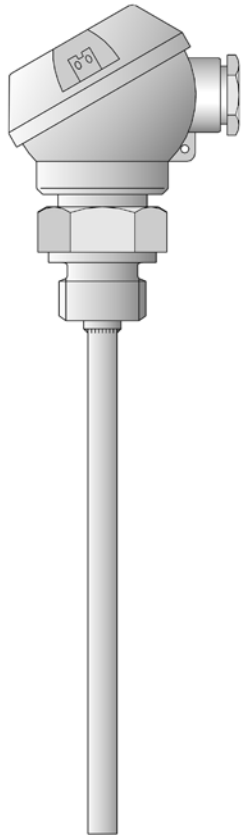

- **For temperatures from -50 to +400°C**
- **As single or double RTD temperature probes**
- **Available with transmitter**
- **Protection class IP65**

Screw-in RTD temperature probes are preferentially used for measuring temperatures in liquids and gases. A decisive selection criterion is the reliable sealing feature of this installation type with vacuum and with overpressure. The application areas are, among others, in the air conditioning technology and refrigeration engineering as well as the HVAC, kiln and apparatus engineering sector.

The measuring insert is normally fitted with a Pt100 temperature sensor according to DIN EN 60751, Class B in 2-wire circuit; versions with Pt500 or Pt1000 temperature sensors can also be supplied, as well as 3- and 4-wire circuit connections. A transmitter can be optionally integrated into the connection head.

Technical Data

Terminal head	Form J, die-cast aluminum, M 16x1.5; IP65, ambient temperature -40 to +100 °C Caution: reduced ambient temperature range when using transmitters, Data Sheet 70.7030
Process connection	thread, stainless steel 1.4571
Protection tube	Stainless steel 1.4571, Ø 6 mm and Ø 8 mm
Measuring insert	Pt100 temperature sensor according to DIN EN 60751, Class B, two-wire circuit
Response times	$t_{0.5}$ = 5 sec, $t_{0.9}$ = 14 sec, in water 0.4 m/sec, 6 mm dia.
Transmitter	Analog transmitter, output 4 to 20 mA, Data sheet 70.7030
Accessories	Sheath, Data Sheet 90.9710 (90.9721)

JUMO GmbH & Co. KG
Delivery address: Mackenrodtstraße 14,
36039 Fulda, Germany
Postal address: 36035 Fulda, Germany
Phone: +49 661 6003-0
Fax: +49 661 6003-607
e-mail: mail@jumo.net
Internet: www.jumo.net

JUMO Instrument Co. Ltd.
JUMO House
Temple Bank, Riverway
Harlow, Essex CM 20 2TT, UK
Phone: +44 1279 635533
Fax: +44 1279 635262
e-mail: sales@jumo.co.uk
Internet: www.jumo.co.uk

JUMO Process Control, Inc.
8 Technology Boulevard
Canastota, NY 13032, USA
Phone: 315-697-JUMO
1-800-554-JUMO
Fax: 315-697-5867
e-mail: info@jumo.us
Internet: www.jumo.us

Dimensions

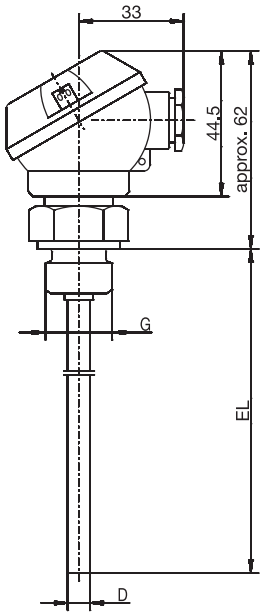

Type 902030/10

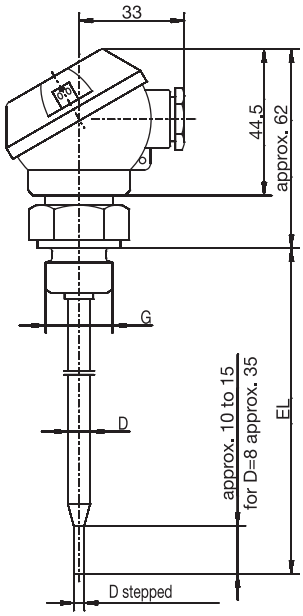

Type 902030/11

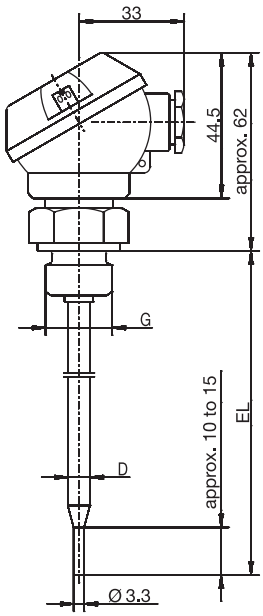

Type 902030/31

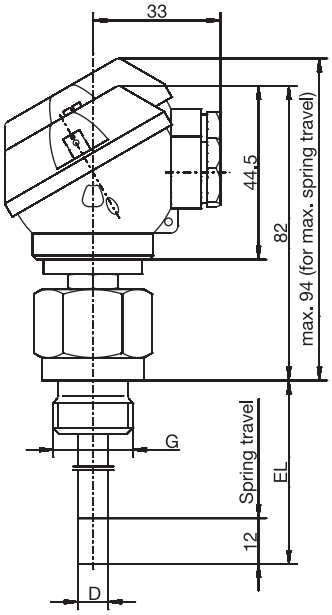

Type 902030/80

JUMO GmbH & Co. KG
Delivery address: Mackenrodtstraße 14, 36039 Fulda, Germany
Postal address: 36035 Fulda, Germany
Phone: +49 661 6003-0
Fax: +49 661 6003-607
e-mail: mail@jumo.net
Internet: www.jumo.net

JUMO Instrument Co. Ltd.
JUMO House
Temple Bank, Riverway
Harlow, Essex CM 20 2TT, UK
Phone: +44 1279 635533
Fax: +44 1279 635262
e-mail: sales@jumo.co.uk
Internet: www.jumo.co.uk

JUMO Process Control, Inc.
8 Technology Boulevard
Canastota, NY 13032, USA
Phone: 315-697-JUMO
1-800-554-JUMO
Fax: 315-697-5867
e-mail: info@jumo.us
Internet: www.jumo.us

Order details: Screw-in RTD temperature probe with terminal head form J

					(1)	**Basic type**
				902030/10		Screw-in RTD temperature probes with continuous sheath
				902030/11		Screw-in RTD temperature probes with stepped sheath (with Ø 6 to Ø 3.8 mm; with Ø 8 to Ø 6 mm)
				902030/31		Screw-in RTD temperature probes with stepped sheath for air measurement
				902030/80		Screw-in RTD temperature probes with spring-loaded connection, 12 mm spring deflection, connection head rotatable by 360°
					(2)	**Operating temperature in °C**
x	x			647		-20 to +150 °C (only in conjunction with class B and 1x Pt100/1x Pt1000 in 2-wire circuit)
			x	378		-50 to +180 °C
x	x	x		380		-50 to +200 °C
x	x			386		-50 to +260 °C
x	x			402		-50 to +400 °C
					(3)	**Measuring insert**
x	x	x	x	1001		1x Pt100 in 3-wire-circuit
x	x	x	x	1003		1x Pt100 in 2-wire circuit
x	x	x	x	1005		1x Pt1000 in 2-wire circuit
x	x	x	x	1011		1x Pt100 in 4-wire circuit
x	x	x	x	2003		2x Pt100 in 2-wire circuit
					(4)	**Tolerance class according to EN 60751**
x	x	x	x	1		Class B (standard)
x	x	x	x	2		Class A
					(5)	**Protection tube diameter D in mm**
x	x	x		6		Ø 6 mm (standard)
	x		x	8		Ø 8 mm
					(6)	**Fitting length EL in mm (100 ≤ EL ≤ 1000)**
x			x	50		50 mm
x	x	x	x	100		100 mm
x	x	x	x	150		150 mm
x	x	x	x	250		250 mm
x	x	x	x	300		300 mm
x	x	x	x	...		Specification in plain text (50 mm steps)
					(7)	**Process connection**
x	x	x		102		Screw connection (thread) G 1/4
x	x	x		103		Screw connection (thread) G 3/8
x	x	x	x	104		Screw connection (thread) G 1/2
					(8)	**Extra codes**
x	x	x	x	000		without extra codes
x	x	x	x	330		1x analog transmitter, 4 to 20 mA[1] output, Data sheet 70.7030

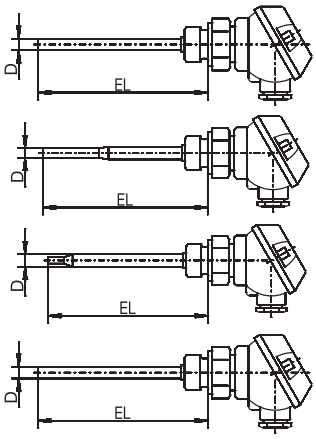

	(1)	-	(2)	-	(3)	-	(4)	-	(5)	-	(6)	-	(7)	/	(8)
Order code		-		-		-		-		-		-		/	
Order example	902030/10	-	402	-	1001	-	1	-	6	-	100	-	104	/	000

[1] Specify measuring range in plain text.

JUMO GmbH & Co. KG
Delivery address: Mackenrodtstraße 14,
36039 Fulda, Germany
Postal address: 36035 Fulda, Germany
Phone: +49 661 6003-0
Fax: +49 661 6003-607
e-mail: mail@jumo.net
Internet: www.jumo.net

JUMO Instrument Co. Ltd.
JUMO House
Temple Bank, Riverway
Harlow, Essex CM 20 2TT, UK
Phone: +44 1279 635533
Fax: +44 1279 635262
e-mail: sales@jumo.co.uk
Internet: www.jumo.co.uk

JUMO Process Control, Inc.
8 Technology Boulevard
Canastota, NY 13032, USA
Phone: 315-697-JUMO
1-800-554-JUMO
Fax: 315-697-5867
e-mail: info@jumo.us
Internet: www.jumo.us

Stock versions

(1)		(2)		(3)		(4)		(5)		(6)		(7)		(8)	Part No.
902030/10	-	380	-	2003	-	1	-	6	-	50	-	104	/	000	90/00533450
902030/10	-	380	-	2003	-	1	-	6	-	100	-	104	/	000	90/00533451
902030/10	-	380	-	2003	-	1	-	6	-	150	-	104	/	000	90/00533452
902030/10	-	402	-	1003	-	1	-	6	-	50	-	104	/	000	90/00055692
902030/10	-	402	-	1003	-	1	-	6	-	100	-	104	/	000	90/00055693
902030/10	-	402	-	1003	-	1	-	6	-	150	-	104	/	000	90/00055694
902030/10	-	402	-	1003	-	1	-	6	-	300	-	104	/	000	90/00065691
902030/10	-	402	-	1003	-	1	-	6	-	250	-	104	/	000	90/00533433
902030/10	-	402	-	2003	-	1	-	6	-	50	-	104	/	000	90/00383011
902030/10	-	402	-	2003	-	1	-	6	-	100	-	104	/	000	90/00526429
902030/10	-	402	-	2003	-	1	-	6	-	150	-	104	/	000	90/00533442
902030/10	-	402	-	1003	-	1	-	6	-	50	-	103	/	000	90/00478984
902030/10	-	402	-	1003	-	1	-	6	-	100	-	103	/	000	90/00424045
902030/10	-	380	-	1003	-	1	-	6	-	100	-	104	/	330(-40 to +60 °C)	90/00533453
902030/10	-	647	-	1003	-	1	-	6	-	100	-	104	/	330(0 to 100 °C)	90/00533454
902030/10	-	647	-	1003	-	1	-	6	-	150	-	104	/	330(0 to 100° C)	90/00533468
902030/10	-	402	-	1005	-	1	-	6	-	100	-	104	/	000	90/00359611
902030/10	-	402	-	1005	-	1	-	6	-	150	-	104	/	000	90/00411610
902030/10	-	647	-	1003	-	1	-	6	-	50	-	104	/	000	90/00533448
902030/10	-	647	-	1003	-	1	-	6	-	100	-	104	/	000	90/00533449
902030/10	-	647	-	1003	-	1	-	6	-	150	-	104	/	000	90/00508957
902030/31	-	380	-	1003	-	1	-	6	-	75	-	104	/	000	90/00438406
902030/31	-	380	-	1003	-	1	-	6	-	100	-	104	/	000	90/00438408
902030/31	-	380	-	1003	-	1	-	6	-	150	-	104	/	000	90/00438409

JUMO GmbH & Co. KG
Delivery address: Mackenrodtstraße 14
36039 Fulda, Germany
Postal address: 36035 Fulda, Germany
Phone: +49 661 6003-0
Fax: +49 661 6003-607
Email: mail@jumo.net
Internet: www.jumo.net

JUMO Instrument Co. Ltd.
JUMO House
Temple Bank, Riverway
Harlow, Essex, CM20 2DY, UK
Phone: +44 1279 63 55 33
Fax: +44 1279 62 50 29
Email: sales@jumo.co.uk
Internet: www.jumo.co.uk

JUMO Process Control, Inc.
6733 Myers Road
East Syracuse, NY 13057, USA
Phone: +1 315 437 5866
Fax: +1 315 437 5860
Email: info.us@jumo.net
Internet: www.jumousa.com

JUMO VIBROtemp

Screw-In RTD Temperature Probe with Plug Connector

- **For temperatures from -50 to +270 °C (temporarily up to 300 °C)**
- **Vibration-resistant construction**
- **Application areas: commercial vehicles, construction and agricultural machinery, motors, compressors, and railway technology**
- **Various plug connectors; locked to ensure contact**
- **Protection type up to IP67/IP69 according to DIN EN 60529 (IP69K according to DIN 40050)**

Even under pressure, screw-in RTD temperature probes in the VIBROtemp series enable reliable temperature measurements in commercial vehicles, construction machinery, agricultural machinery, motors, compressors, and in railway technology.

The vibration-resistant construction achieves excellent long-term stability even in tough operating conditions.

Different plug connections are available to suit the specific application area. When plugged in, protection type IP67/IP69 according to DIN EN 60529 or IP69K according to DIN 40050 is fulfilled.

The protection tube is reduced to 4 mm, which enables short response times.

The measuring insert is a Pt100 temperature sensor according to DIN EN 60751:2009 / IEC 60751:2008, class B in two-wire circuit as standard. Versions with Pt500 or Pt1000 as well as PTC or NTC temperature sensors are also possible.

Approvals/approval marks (see "Technical data")

Safety Integrity Level SIL QUALIFIED

Performance Level PL QUALIFIED

JUMO GmbH & Co. KG
Delivery address: Mackenrodtstraße 14
36039 Fulda, Germany
Postal address: 36035 Fulda, Germany
Phone: +49 661 6003-0
Fax: +49 661 6003-607
Email: mail@jumo.net
Internet: www.jumo.net

JUMO Instrument Co. Ltd.
JUMO House
Temple Bank, Riverway
Harlow, Essex, CM20 2DY, UK
Phone: +44 1279 63 55 33
Fax: +44 1279 62 50 29
Email: sales@jumo.co.uk
Internet: www.jumo.co.uk

JUMO Process Control, Inc.
6733 Myers Road
East Syracuse, NY 13057, USA
Phone: +1 315 437 5866
Fax: +1 315 437 5860
Email: info.us@jumo.net
Internet: www.jumousa.com

Technical data

Basic types	902040/10: AMP plug connector (Junior Power Timer), IP67 902040/12: machine connector M12 × 1, IP67 902040/15: bayonet connector according to DIN 72585, IP69/IP69K 902040/17: Bosch compact connector 1.1, IP69/IP69K
Process connection	Thread M14 × 1.5 (standard), more upon request
Protection tube	Stainless steel or brass
Measuring insert	Pt100, Pt500, or Pt1000 temperature sensors according to DIN EN 60751:2009 / IEC 60751:2008, class B in two-wire circuit, more upon request
Vibration stability (depending on version)	Frequencies from 10 to 3000 Hz Acceleration up to 30 g Shock up to 100 g/5 ms
Protection type (when plugged in)	IP67/IP69 according to DIN EN 60529 (IP69K according to DIN 40050), see technical data for “Basic Types”
Response times	In water with a flow velocity of 0.4 m/s Ø 4 mm: $t_{0.5}$ = 1.2 s, $t_{0.9}$ = 6 s
Accessories	Coupling for each basic type (see data sheet 909760)
Variable features (special version)	Insertion length Protection tube diameter Wall thickness Process connection (thread type) Thread undercut (DIN 3852 standard, form A) Protection tube material Measuring insert Extension tube Connector

Approvals/approval marks

Approval mark	Test facility	Certificate/certification number	Inspection basis	Valid for
SIL QUALIFIED PL QUALIFIED	-	-	-	Extra code 658 in conjunction with declaration of manufacturer

JUMO GmbH & Co. KG
Delivery address: Mackenrodtstraße 14
36039 Fulda, Germany
Postal address: 36035 Fulda, Germany
Phone: +49 661 6003-0
Fax: +49 661 6003-607
Email: mail@jumo.net
Internet: www.jumo.net

JUMO Instrument Co. Ltd.
JUMO House
Temple Bank, Riverway
Harlow, Essex, CM20 2DY, UK
Phone: +44 1279 63 55 33
Fax: +44 1279 62 50 29
Email: sales@jumo.co.uk
Internet: www.jumo.co.uk

JUMO Process Control, Inc.
6733 Myers Road
East Syracuse, NY 13057, USA
Phone: +1 315 437 5866
Fax: +1 315 437 5860
Email: info.us@jumo.net
Internet: www.jumousa.com

Dimensions

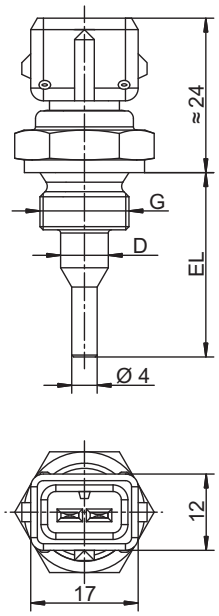

Basic type 902040/10

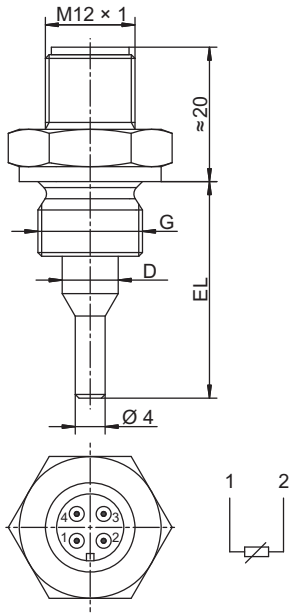

Basic type 902040/12

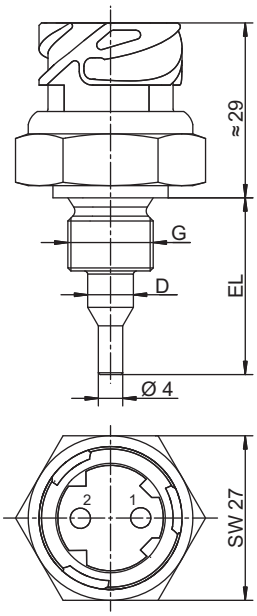

Basic type 902040/15

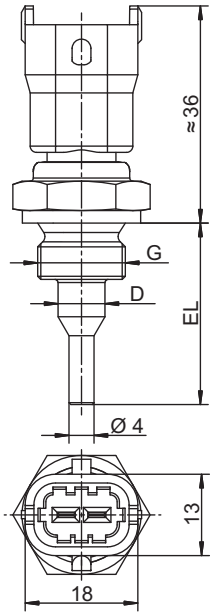

Basic type 902040/17

JUMO GmbH & Co. KG
Delivery address: Mackenrodtstraße 14
36039 Fulda, Germany
Postal address: 36035 Fulda, Germany
Phone: +49 661 6003-0
Fax: +49 661 6003-607
Email: mail@jumo.net
Internet: www.jumo.net

JUMO Instrument Co. Ltd.
JUMO House
Temple Bank, Riverway
Harlow, Essex, CM20 2DY, UK
Phone: +44 1279 63 55 33
Fax: +44 1279 62 50 29
Email: sales@jumo.co.uk
Internet: www.jumo.co.uk

JUMO Process Control, Inc.
6733 Myers Road
East Syracuse, NY 13057, USA
Phone: +1 315 437 5866
Fax: +1 315 437 5860
Email: info.us@jumo.net
Internet: www.jumousa.com

Order details

					(1)	**Basic type**
				902040/10		Screw-in RTD temperature probe with AMP plug connector (Junior Power Timer)
				902040/12		Screw-in RTD temperature probe with machine connector M12 × 1
				902040/15		Screw-in RTD temperature probe with bayonet connector according to DIN 72585
				902040/17		Screw-in RTD temperature probe with Bosch compact connector 1.1
					(2)	**Operating temperature in °C**
x	x	x	x	370		-50 to +150 °C
x		x	x	387		-50 to +270 °C (temporarily 300 °C)
					(3)	**Measuring insert**
x	x	x	x	1003		1× Pt100 in two-wire circuit
x	x	x	x	1004		1× Pt500 in two-wire circuit
x	x	x	x	1005		1× Pt1000 in two-wire circuit
x	x	x	x	9999		According to customer specification
					(4)	**Tolerance class according to DIN EN 60751:2009 / IEC 60751:2008**
x	x	x	x	0		None
x	x	x	x	1		Class B
x	x	x	x	2		Class A
					(5)	**Protection tube diameter D in mm**
x	x	x	x	7.5		Ø 7.5 mm stepped down to Ø 4 mm
					(6)	**Insertion length EL in mm**
x	x	x	x	29		29 mm
					(7)	**Process connection**
x	x	x	x	121		Screw connection M14 × 1.5
					(8)	**Protection tube material**
x	x	x	x	20		CrNi (stainless steel)
x	x	x	x	46		CuZn (brass)
					(9)	**Extra codes**
x	x	x	x	000		None
x	x	x	x	658		SIL and PL compatible with safety temperature limiter and safety temperature monitor 70115X

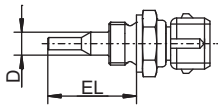

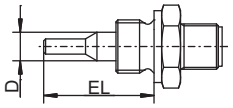

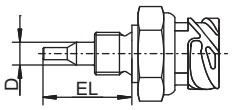

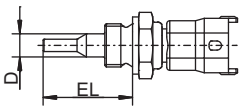

	(1)		(2)		(3)		(4)		(5)		(6)		(7)		(8)		(9)
Order code		-		-		-		-		-		-		-		/	
Order example	902040/10	-	387	-	1003	-	1	-	7.5	-	29	-	121	-	20	/	000

JUMO GmbH & Co. KG
Delivery address: Mackenrodtstraße 14
36039 Fulda, Germany
Postal address: 36035 Fulda, Germany
Phone: +49 661 6003-0
Fax: +49 661 6003-607
Email: mail@jumo.net
Internet: www.jumo.net

JUMO Instrument Co. Ltd.
JUMO House
Temple Bank, Riverway
Harlow, Essex, CM20 2DY, UK
Phone: +44 1279 63 55 33
Fax: +44 1279 62 50 29
Email: sales@jumo.co.uk
Internet: www.jumo.co.uk

JUMO Process Control, Inc.
6733 Myers Road
East Syracuse, NY 13057, USA
Phone: +1 315 437 5866
Fax: +1 315 437 5860
Email: info.us@jumo.net
Internet: www.jumousa.com

Stock versions

Order code	Part no.
902040/10-387-1003-1-7.5-29-121-20/000	00446901
902040/10-387-1003-1-7.5-29-121-46/000	00447301
902040/12-370-1003-1-7.5-29-121-20/000	00624093
902040/15-387-1003-1-7.5-29-121-20/000	00624094
902040/17-387-1003-1-7.5-29-121-20/000	00624096

Accessories

Designation	Part no.
Coupling for basic type 902040/10 With 2.5 m silicone-insulated connecting cable, IP65, operating temperature -40 to +120 °C Plug connection: AMP, Junior Power Timer	00308880
Set coupling with 6 parts, Junior Power Timer, IP65, operating temperature -40 to +120 °C Coupling for basic type 902040/10 Plug connection: AMP, Junior Power Timer	00089930
Set coupling with 4 parts, Junior Power Timer, operating temperature -20 to +80 °C Coupling for basic type 902040/10 Plug connection: AMP, Junior Power Timer	00201426
Cable socket, angled, 4-pole, M12 × 1 With 2 m PVC connecting cable, IP68, operating temperature -5 to +70 °C For basic type 902040/12 Plug connection: machine connector M12 × 1	00409334
Set coupling with 6 parts, bayonet DIN 72585, IP65, operating temperature -40 to +120 °C Coupling for basic type 902040/15 Plug connection: bayonet connector DIN 72585	00439715
Set coupling with 6 parts, Bosch compact 1.1, IP65, operating temperature -40 to +120 °C Coupling for basic type 902040/17 Plug connection: Bosch compact 1.1	00616005

JUMO GmbH & Co. KG
Hausadresse: Moritz-Juchheim-Straße 1, 36039 Fulda, Germany
Lieferadresse: Mackenrodtstraße 14, 36039 Fulda, Germany
Postadresse: 36035 Fulda, Germany

Telefon: +49 661 6003-722/724
Telefax: +49 661 6003-601/688
E-Mail: mail@jumo.net
Internet: www.jumo.net

Screw-in RTD temperature probe with plug connector according to DIN EN 175301

- **For temperatures between -50 and +260 °C**
- **Vibration-resistant design**
- **Plug connector locked against contact, protection type IP65**
- **Available with transmitter**
- **GL approval for basic types 902044/20 and 902044/21 (max. insertion length 200 mm)**

Vibration-resistant screw-in RTD temperature probes allow temperatures to be measured under pressure in engines, compressors, plant engineering, and shipbuilding.

The plug connectors between the protection fitting and the connecting cable are locked against contact and have protection type IP65 when connected.

The measuring insert is a Pt100 temperature sensor according to DIN EN 60751, class B in 2-wire circuit as standard. Other versions with Pt500 or Pt1000 are also possible.

The connection can be carried out in a 2-wire or 4-wire circuit as required.

Basic types 902044/25 to 902044/29 are available as versions with transmitters (output 4 to 20 mA).

Technical data

Connection	Basic types 902044/15, 902044/20, 902044/25, 902044/28, and 902044/80: DIN EN 175301-803 plug connectors, Pg9 Basic types 902044/16, 902044/21, 902044/26, 902044/29, and 902044/81: DIN EN 175301-803 plug connectors, Pg11 Max. conductor cross section 1.5 mm^2, IP65, ambient temperature -40 to +125 °C For versions with transmitters: ambient temperature -40 to +85 °C
Process connection	Thread, stainless steel 1.4301/1.4571
Protection tube	Stainless steel 1.4571, Ø 8 mm, Ø 6 mm stepped down to 3.3 mm, Max. pressure load 50 bar at 200 °C (basic types 902044/20 and 902044/21)
Measuring insert	Pt100 temperature sensor, DIN EN 60751, class B in 2-wire or 4-wire circuit, exchangeable. Shorter fitting lengths in connection with unfavorable fitting conditions (heat dissipation error) can result in an exceedance of the tolerance class. The measuring insert is not exchangeable for versions equipped with transmitters.
Protection type	IP65 when connected
Response times	Basic types 902044/15 and 902044/16: $t_{0.5}$ = < 2 s, $t_{0.9}$ = < 4 s, in water with 0.2 m/s, Ø 6 mm stepped down to Ø 3.3 mm Basic types 902044/20 and 902044/21: $t_{0.5}$ = 15 s, $t_{0.9}$ = 45 s, in water with 0.2 m/s, Ø 8 mm Basic types 902044/25 to 902044/29: $t_{0.5}$ = < 2 s, $t_{0.9}$ = < 4 s, in water with 0.2 m/s, Ø 6 mm stepped down to Ø 3.3 mm Basic types 902044/80 and 902044/81: $t_{0.5}$ = 5 s, $t_{0.9}$ = 12 s, in water with 0.2 m/s, Ø 8 mm
Vibration resistance	Germanischer Lloyd, application category "D“, characteristic line 2
Approvals	Basic types 902044/20 and 902044/21 GL Germanischer Lloyd
Accessories	Thermowell, data sheet 902440

Approvals/approval marks (see "Technical data")

2014-05-16/00534480

JUMO GmbH & Co. KG
Hausadresse: Moritz-Juchheim-Straße 1, 36039 Fulda, Germany
Lieferadresse: Mackenrodtstraße 14, 36039 Fulda, Germany
Postadresse: 36035 Fulda, Germany
Telefon: +49 661 6003-722/724
Telefax: +49 661 6003-601/688
E-Mail: mail@jumo.net
Internet: www.jumo.net

Technical data

Transmitter	Input	
	Measuring input	Pt100 acc. to DIN EN 60751
	Measuring range limits	-50 to +260 °C
	Measuring span	25 to 310 K (also see zero offset)
	Zero offset Data sheet 707030, page 7/10	For measuring spans < 75 K, fixed zero adjustment: -40 °C, -20 °C, 0 °C, 20 °C, and 40 °C For measuring spans ≥ 75 K: ±50 °C
	Sensor current	≤ 0.5 mA
	Sampling rate	Permanent measurement due to analog signal path
	Measuring circuit monitoring	
	Underrange	Dropping to ≤ 3.6 mA
	Overrange	Increasing to ≥ 22 mA to < 28 mA (typical 24 mA)
	Probe short circuit	≤ 3.6 mA
	Probe/cable break	Positive: ≥ 22 mA to < 28 mA (typical 24 mA)
	Output	
	Output signal	Load-independent direct current: 4 to 20 mA
	Transmission behavior	Temperature-linear
	Transmission accuracy	≤ ±0.1%
	Attenuation of the residual ripple of a voltage supply of 24 V, amplitude 10 V at 50 Hz, burden 470 Ω at load of 10 MΩ	40 dB
	Load (Rb)	Rb = (Ub - 7.5 V) ÷ 22 mA
	Load error	≤ ±0.02% per 100 Ω[a]
	Setting time for temperature changes	≤ 10 ms
	Calibration conditions	DC 24 V at approx. 22 °C
	Calibration accuracy	≤ ±0.2%[a, b] or ≤ ±0.2 K
	Overall accuracy, probe/calibration	±0.4 K (typical) at 20 °C and DC 24 V voltage supply
	Voltage supply	
	Voltage supply (Ub)	DC 7.5 to 30 V
	Reverse voltage protection	Yes
	Voltage supply influence	≤ ±0.01% per V deviation from DC 24 V[a]
	Environmental influences	
	Operating temperature range	-40 to +85 °C
	Storage temperature range	-40 to +100 °C
	Temperature influence	≤ ±0.01% per K deviation from 22 °C[a]
	Resistance to climatic conditions similar to DIN EN 60654 class D1	Relative humidity ≤ 95% annual average, no condensation
	EMC	EN 61326
	- Interference emission	Class B
	- Interference immunity	Industrial requirements

[a] All specifications refer to the measuring range end value of 20 mA.
[b] The higher value is valid.

Approvals/approval marks

Approval mark	Testing agency	Certificates/certification numbers	Inspection basis	valid for
GL	Germanischer Lloyd	15 700 - 00 HH	Guidelines for the Performance of Type Approvals Chapter 2, Edition 2003	Basic type 902044/20 ... Basic type 902044/21 ...

JUMO GmbH & Co. KG
Hausadresse: Moritz-Juchheim-Straße 1, 36039 Fulda, Germany
Lieferadresse: Mackenrodtstraße 14, 36039 Fulda, Germany
Postadresse: 36035 Fulda, Germany

Telefon: +49 661 6003-722/724
Telefax: +49 661 6003-601/688
E-Mail: mail@jumo.net
Internet: www.jumo.net

Connection diagram

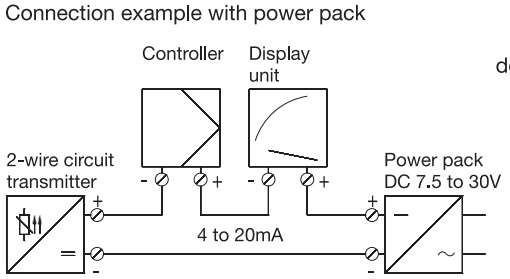

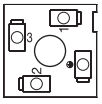

Hirschmann device connector

Connection, temperature probe without transmitter

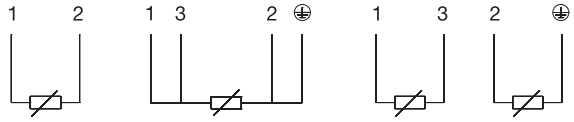

2-wire circuit | 4-wire circuit | 2x 2-wire circuits

Connection for		Connection assignment		
	Voltage supply 7.5 to 30V	+ 1	$R_B = \frac{U_b - 7.5V}{22mA}$	1 2
	Current output 4 to 20mA	- 2	R_B = Load resistor U_b = Voltage supply	+ -

JUMO GmbH & Co. KG
Hausadresse: Moritz-Juchheim-Straße 1, 36039 Fulda, Germany
Lieferadresse: Mackenrodtstraße 14, 36039 Fulda, Germany
Postadresse: 36035 Fulda, Germany
Telefon: +49 661 6003-722/724
Telefax: +49 661 6003-601/688
E-Mail: mail@jumo.net
Internet: www.jumo.net

Dimensions

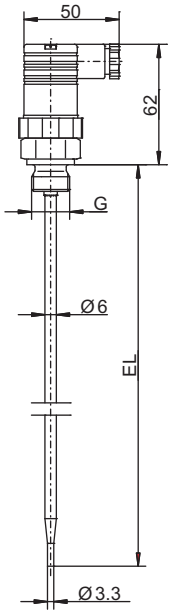

Basic type 902044/15
Basic type 902044/16

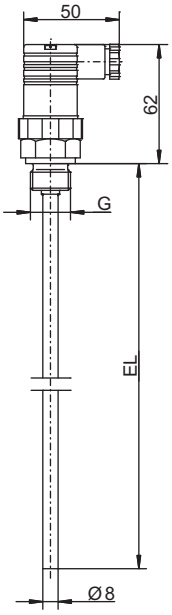

Basic type 902044/20
Basic type 902044/21

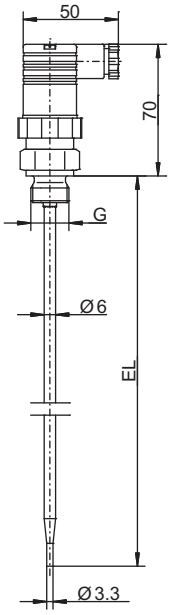

Basic type 902044/25
Basic type 902044/26

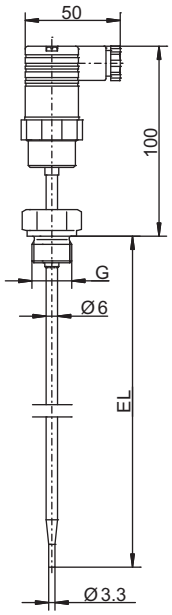

Basic type 902044/28
Basic type 902044/29

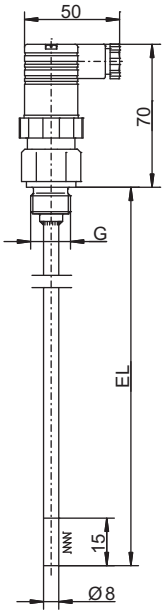

Basic type 902044/80
Basic type 902044/81

JUMO GmbH & Co. KG
Hausadresse: Moritz-Juchheim-Straße 1, 36039 Fulda, Germany
Lieferadresse: Mackenrodtstraße 14, 36039 Fulda, Germany
Postadresse: 36035 Fulda, Germany
Telefon: +49 661 6003-722/724
Telefax: +49 661 6003-601/688
E-Mail: mail@jumo.net
Internet: www.jumo.net

Order details

			(1)	**Basic type**
		902044/15		Screw-in RTD temperature probe with connection socket Pg9 and stepped down protection tube according to DIN EN 175301-803 (DIN 43650)
		902044/16		Screw-in RTD temperature probe with connection socket Pg11 and stepped down protection tube according to DIN EN 175301-803 (DIN 43650)
			(2)	**Operating temperature in °C**
x	x	380		-50 to +200 °C
			(3)	**Measuring insert**
x	x	1003		1 × Pt100 in 2-wire circuit
x	x	1011		1 × Pt100 in 4-wire circuit
			(4)	**Tolerance class according to DIN EN 60751**
x	x	1		Class B (standard)
x	x	2		Class A
			(5)	**Protection tube diameter D in mm**
x	x	6		Ø 6 mm, stepped down to Ø 3.3 mm
			(6)	**Insertion length EL in mm (50 to 800 mm)**
x	x	50		50 mm
x	x	100		100 mm
x	x	150		150 mm
x	x	200		200 mm
x	x	250		250 mm
x	x	. . .		Please specify in plain text (50 mm increments)
			(7)	**Process connection**
x	x	102		Screw connection G 1/4
x	x	103		Screw connection G 3/8
x	x	104		Screw connection G 1/2
x	x	126		Screw connection M18 × 1.5
x	x	128		Screw connection M20 × 1.5
x	x	144		Screw connection (thread) 1/2-14NPT
			(8)	**Protection tube material**
x	x	26		Stainless steel 1.4571
			(9)	**Extra code**
x	x	000		Without

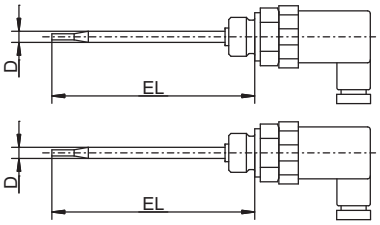

	(1)		(2)		(3)		(4)		(5)		(6)		(7)		(8)		(9)
Order code		-		-		-		-		-		-		-		/	
Order example	902044/15	-	380	-	1003	-	1	-	6	-	100	-	104	-	26	/	000

Note:
Version with machine connector M12 × 1, data sheets 902040 and 902815

JUMO GmbH & Co. KG
Hausadresse: Moritz-Juchheim-Straße 1, 36039 Fulda, Germany
Lieferadresse: Mackenrodtstraße 14, 36039 Fulda, Germany
Postadresse: 36035 Fulda, Germany
Telefon: +49 661 6003-722/724
Telefax: +49 661 6003-601/688
E-Mail: mail@jumo.net
Internet: www.jumo.net

Order details

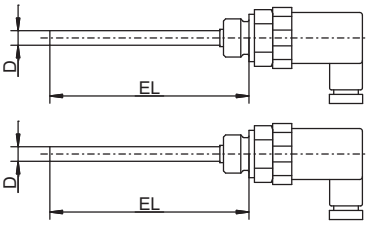

			(1)	**Basic type**
		902044/20		Screw-in RTD temperature probe with connection socket Pg9 according to DIN EN 175301-803 (DIN 43650)
		902044/21		Screw-in RTD temperature probe with connection socket Pg11 according to DIN EN 175301-803 (DIN 43650)
			(2)	**Operating temperature in °C**
x	x	380		-50 to +200 °C
			(3)	**Measuring insert**
x	x	1003		1 × Pt100 in 2-wire circuit
x	x	1011		1 × Pt100 in 4-wire circuit
x	x	2003		2 × Pt100 in 2-wire circuit
			(4)	**Tolerance class according to DIN EN 60751**
x	x	1		Class B (standard)
x	x	2		Class A
			(5)	**Protection tube diameter D in mm**
x	x	8		Ø 8 mm
			(6)	**Insertion length EL in mm (50 to 800 mm)**
x	x	50		50 mm
x	x	100		100 mm
x	x	150		150 mm
x	x	200		200 mm
x	x	250		250 mm (no GL approval)
x	x	. . .		Please specify in plain text (50 mm increments)
			(7)	**Process connection**
x	x	102		Screw connection G 1/4
x	x	103		Screw connection G 3/8
x	x	104		Screw connection G 1/2
x	x	126		Screw connection M18 × 1.5
x	x	128		Screw connection M20 × 1.5
x	x	144		Screw connection (thread) 1/2-14NPT
			(8)	**Protection tube material**
x	x	26		Stainless steel 1.4571
			(9)	**Extra code**
x	x	000		Without
x	x	062		GL approval (max. EL = 200 mm)

	(1)		(2)		(3)		(4)		(5)		(6)		(7)		(8)		(9)
Order code		-		-		-		-		-		-		-		/	
Order example	902044/20	-	380	-	1003	-	1	-	8	-	100	-	104	-	26	/	000

Note:
Version with machine connector M12 × 1, data sheets 902040 and 902815

JUMO GmbH & Co. KG
Hausadresse: Moritz-Juchheim-Straße 1, 36039 Fulda, Germany
Lieferadresse: Mackenrodtstraße 14, 36039 Fulda, Germany
Postadresse: 36035 Fulda, Germany
Telefon: +49 661 6003-722/724
Telefax: +49 661 6003-601/688
E-Mail: mail@jumo.net
Internet: www.jumo.net

Order details

					(1)	**Basic type**
				902044/25		Screw-in RTD temperature probe with analog transmitter and connection socket Pg9 according to DIN EN 175301-803 (DIN 43650)
				902044/26		Screw-in RTD temperature probe with analog transmitter and connection socket Pg11 according to DIN EN 175301-803 (DIN 43650)
				902044/28		Screw-in RTD temperature probe with analog transmitter and connection socket Pg9 according to DIN EN 175301-803 (DIN 43650) (neck tube design for higher temperatures)
				902044/29		Screw-in RTD temperature probe with analog transmitter and connection socket Pg11 according to DIN EN 175301-803 (DIN 43650) (neck tube design for higher temperatures)
					(2)	**Operating temperature in °C**
x	x			370		-50 to +150 °C
		x	x	386		-50 to +260 °C
					(3)	**Measuring insert**
x	x	x	x	1003		1 × Pt100 in 2-wire circuit
					(4)	**Tolerance class according to DIN EN 60751**
x	x	x	x	1		Class B (standard)
x	x	x	x	2		Class A
					(5)	**Protection tube diameter D in mm**
x	x	x	x	6		Ø 6 mm, stepped down to Ø 3.3 mm
					(6)	**Insertion length EL in mm (50 to 800 mm)**
x	x	x	x	50		50 mm
x	x	x	x	100		100 mm
x	x	x	x	150		150 mm
x	x	x	x	200		200 mm
x	x	x	x	250		250 mm
x	x	x	x	. . .		Please specify in plain text (50 mm increments)
					(7)	**Process connection**
x	x	x	x	102		Screw connection G 1/4
x	x	x	x	103		Screw connection G 3/8
x	x	x	x	104		Screw connection G 1/2
x	x	x	x	126		Screw connection M18 × 1.5
x	x	x	x	128		Screw connection M20 × 1.5
x	x	x	x	144		Screw connection (thread) 1/2-14NPT
					(8)	**Protection tube material**
x	x	x	x	26		Stainless steel 1.4571
					(9)	**Extra code**
x	x	x	x	000		Without

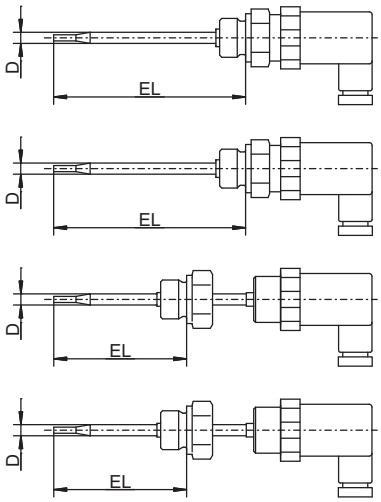

	(1)		(2)		(3)		(4)		(5)		(6)		(7)		(8)		(9)
Order code		-		-		-		-		-		-		-		/	
Order example	902044/25	-	370	-	1003	-	1	-	6	-	100	-	104	-	26	/	000

Note:
Version with machine connector M12 × 1, data sheets 902040 and 902815

JUMO GmbH & Co. KG
Hausadresse: Moritz-Juchheim-Straße 1, 36039 Fulda, Germany
Lieferadresse: Mackenrodtstraße 14, 36039 Fulda, Germany
Postadresse: 36035 Fulda, Germany
Telefon: +49 661 6003-722/724
Telefax: +49 661 6003-601/688
E-Mail: mail@jumo.net
Internet: www.jumo.net

Order details

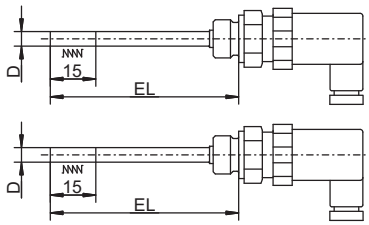

			(1)	**Basic type**
		902044/80		Screw-in RTD temperature probe with connection socket Pg9 according to DIN EN 175301-803 (DIN 43650) and flexible screw connection
		902044/81		Screw-in RTD temperature probe with connection socket Pg11 according to DIN EN 175301-803 (DIN 43650) and flexible screw connection
			(2)	**Operating temperature in °C**
x	x	380		-50 to +200 °C
			(3)	**Measuring insert**
x	x	1003		1 × Pt100 in 2-wire circuit
x	x	1011		1 × Pt100 in 4-wire circuit
x	x	2003		2 × Pt100 in 2-wire circuit
			(4)	**Tolerance class according to DIN EN 60751**
x	x	1		Class B (standard)
x	x	2		Class A
			(5)	**Protection tube diameter D in mm**
x	x	8		Ø 8 mm
			(6)	**Insertion length EL in mm (50 to 800 mm)**
x	x	50		50 mm
x	x	100		100 mm
x	x	150		150 mm
x	x	200		200 mm
x	x	250		250 mm
x	x	. . .		Please specify in plain text (50 mm increments)
			(7)	**Process connection**
x	x	104		Screw connection G 1/2
			(8)	**Protection tube material**
x	x	26		Stainless steel 1.4571
			(9)	**Extra code**
x	x	000		Without

	(1)		(2)		(3)		(4)		(5)		(6)		(7)		(8)		(9)
Order code		-		-		-		-		-		-		-		/	
Order example	902044/80	-	380	-	1003	-	1	-	8	-	100	-	104	-	26	/	000

Stock versions

(1)		(2)		(3)		(4)		(5)		(6)		(7)		(8)		(9)	Part no.
902044/15	-	380	-	1003	-	1	-	6	-	100	-	104	-	26	/	000	00600899
902044/20	-	380	-	1003	-	1	-	8	-	50	-	104	-	26	/	000	00365259
902044/20	-	380	-	1003	-	1	-	8	-	100	-	104	-	26	/	000	00368414
902044/20	-	380	-	1003	-	1	-	8	-	150	-	104	-	26	/	000	00368416

JUMO GmbH & Co. KG
Delivery address: Mackenrodtstraße 14, 36039 Fulda, Germany
Postal address: 36035 Fulda, Germany
Phone: +49 661 6003-0
Fax: +49 661 6003-607
E-mail: mail@jumo.net
Internet: www.jumo.net

JUMO Instrument Co. Ltd.
JUMO House
Temple Bank, Riverway
Harlow - Essex CM20 2DY, UK
Phone: +44 1279 63 55 33
Fax: +44 1279 63 52 62
E-mail: sales@jumo.co.uk
Internet: www.jumo.co.uk

JUMO Process Control, Inc.
8 Technology Boulevard
Canastota, NY 13032, USA
Phone: 315-697-JUMO
1-800-554-JUMO
Fax: 315-697-5867
E-mail: info@jumo.us
Internet: www.jumo.us

Screw-in RTD temperature probes with connecting cable

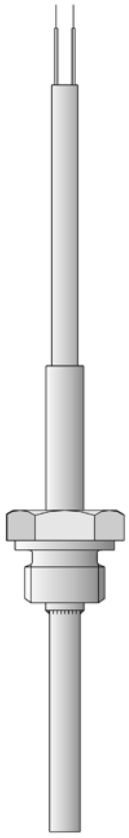

- **for temperatures from -50 to +400°C**
- **as single or twin RTD temperature probe**
- **in 2-wire, 3-wire or 4-wire circuit**
- **connecting cable in PVC, silicone, PTFE or with metal braiding**

Screw-in RTD temperature probes are mainly used for measuring temperatures in liquids and gases. An important selection criterion is their reliable sealing against both negative and positive pressures. Applications include HVAC, refrigeration, heating installations, ovens, furnaces and plant engineering.

Depending on the version, the connecting cables are suitable for use in dry and humid areas within the temperature range -50 to +350°C. The junction between cable and protection tube incorporates strain relief. A cable protector can be supplied as an option.

The measuring insert is normally fitted with a Pt100 temperature sensor to EN 60 751, Class B in 2-wire circuit. Versions with Pt500 or Pt1000 are also available. In addition, there is a choice of 3-wire or 4-wire circuit connections.

Technical data

Connection	available with cable ends as: bare wires, with ferrules, receptacles or multipole connector
Connecting cable	PVC, ambient temperature -5 to +80°C (+105°C) silicone, ambient temperature -50 to +180°C PTFE, ambient temperature -190 to +260°C metal braiding, ambient temperature -50 to +350°C connecting cable can optionally be supplied with shielding
Process connection	thread, stainless steel 1.4571
Protection tube	stainless steel 1.4571 (Type 902050/30 Inconel 2.4816), 5mm, 5.4mm, 6mm and 8mm dia.
Measuring insert	Pt100 temperature sensor, EN 60 751, Cl. B, 2-wire circuit
Response times	$t_{0.5}$ approx. 2sec, $t_{0.9}$ approx. 6sec, in water 0.2m/sec, 6mm dia.
Accessories	pocket, see Data Sheet 90.9721 and 90.2440

JUMO GmbH & Co. KG
Delivery address: Mackenrodtstraße 14,
36039 Fulda, Germany
Postal address: 36035 Fulda, Germany
Phone: +49 661 6003-0
Fax: +49 661 6003-607
E-mail: mail@jumo.net
Internet: www.jumo.net

JUMO Instrument Co. Ltd.
JUMO House
Temple Bank, Riverway
Harlow - Essex CM20 2DY, UK
Phone: +44 1279 63 55 33
Fax: +44 1279 63 52 62
E-mail: sales@jumo.co.uk
Internet: www.jumo.co.uk

JUMO Process Control, Inc.
8 Technology Boulevard
Canastota, NY 13032, USA
Phone: 315-697-JUMO
1-800-554-JUMO
Fax: 315-697-5867
E-mail: info@jumo.us
Internet: www.jumo.us

Dimensions

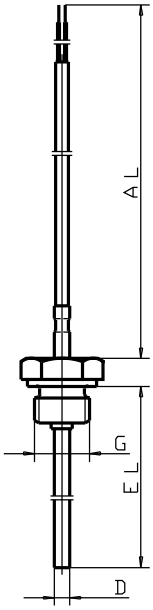

Type 902050/10

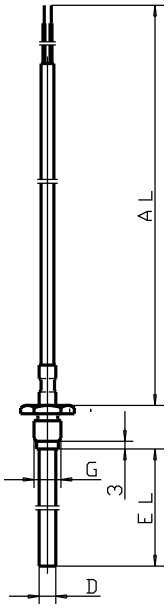

Type 902050/20

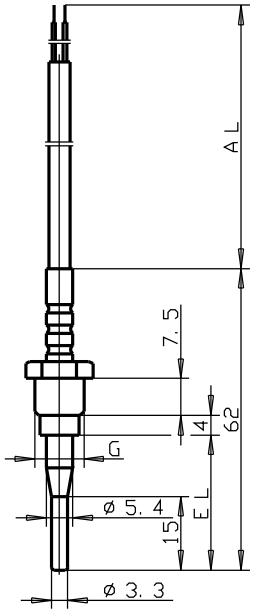

Type 902050/30

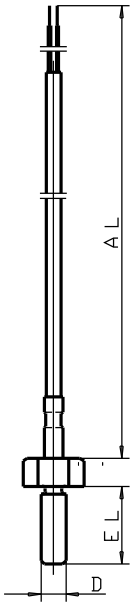

Type 902050/40

JUMO GmbH & Co. KG
Delivery address: Mackenrodtstraße 14, 36039 Fulda, Germany
Postal address: 36035 Fulda, Germany
Phone: +49 661 6003-0
Fax: +49 661 6003-607
E-mail: mail@jumo.net
Internet: www.jumo.net

JUMO Instrument Co. Ltd.
JUMO House
Temple Bank, Riverway
Harlow - Essex CM20 2DY, UK
Phone: +44 1279 63 55 33
Fax: +44 1279 63 52 62
E-mail: sales@jumo.co.uk
Internet: www.jumo.co.uk

JUMO Process Control, Inc.
8 Technology Boulevard
Canastota, NY 13032, USA
Phone: 315-697-JUMO
1-800-554-JUMO
Fax: 315-697-5867
E-mail: info@jumo.us
Internet: www.jumo.us

Order details: Screw-in RTD temperature probes with connecting cable

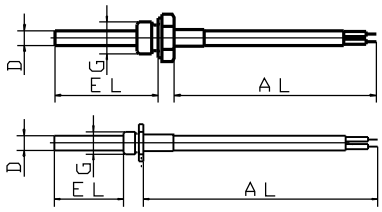

			(1) Basic version
		902050/10	Screw-in RTD temperature probe with fixed screw fitting
		902050/20	Screw-in RTD temperature probe with loose screw fitting
			(2) Operating temperature in °C / connecting cable
x	x	130	-200 to +400°C / metal braiding
x	x	380	-50 to +200°C / silicone
x	x	386	-50 to +260°C / PTFE
x	x	402	-50 to +400°C / metal braiding
x	x	724	-5 to +80°C / PVC
x	x	912	5 to 105°C / PVC (only with 1 x 2-wire or 3-wire circuit)
			(3) Measuring insert
x	x	1001	1 x Pt100 in 3-wire circuit
x	x	1003	1 x Pt100 in 2-wire circuit
x	x	1011	1 x Pt100 in 4-wire circuit
x	x	2001	2 x Pt100 in 3-wire circuit
x	x	2003	2 x Pt100 in 2-wire circuit
			(4) Tolerance class to EN 60 751
x	x	1	Class B (standard)
x	x	2	Class A
			(5) Protection tube diameter D in mm
x	x	5	5mm
x	x	6	6mm
			(6) Fitting length EL in mm (50≤ EL ≤500)
	x	17	17mm
	x	37	37mm
x	x	50	50mm
x	x	100	100mm
	x	137	137mm
x	x	200	200mm
x		250	250mm
x	x	...	please specify in plain text (50mm steps)
			(7) Process connection
x		102	thread 1/4"pipe
x		104	thread 1/2"pipe
	x	114	thread M 10 x 1
			(8) Connecting cable end
x	x	03	bare cable ends
x	x	11	ferrules to DIN 46 228 Part 4 (standard)
x	x	13	receptacle 6.3 to DIN 46 247
x	x	80	multipole connector (please specify type in plain text)
x	x	99	to customer specification
			(9) Connecting cable length AL in mm (500≤ AL ≤500000)
x	x	2500	2500mm
x	x	...	please specify in plain text (500mm steps)
			(10) Extra codes
x	x	000	no extra code
x	x	310	stepped protection tube
x	x	315	cable protector: coil
x	x	316	cable protector: tube
x	x	317	shielded connecting cable

	(1)		(2)		(3)		(4)		(5)		(6)		(7)		(8)		(9)		(10)	
Order code		-		-		-		-		-		-		-		-		/		,...
Order example	902050/10	-	380	-	1001	-	1	-	6	-	100	-	104	-	11	-	2500	/	000[1]	

1.List extra codes in sequence, separated by commas.

JUMO GmbH & Co. KG
Delivery address: Mackenrodtstraße 14, 36039 Fulda, Germany
Postal address: 36035 Fulda, Germany
Phone: +49 661 6003-0
Fax: +49 661 6003-607
E-mail: mail@jumo.net
Internet: www.jumo.net

JUMO Instrument Co. Ltd.
JUMO House
Temple Bank, Riverway
Harlow - Essex CM20 2DY, UK
Phone: +44 1279 63 55 33
Fax: +44 1279 63 52 62
E-mail: sales@jumo.co.uk
Internet: www.jumo.co.uk

JUMO Process Control, Inc.
8 Technology Boulevard
Canastota, NY 13032, USA
Phone: 315-697-JUMO
1-800-554-JUMO
Fax: 315-697-5867
E-mail: info@jumo.us
Internet: www.jumo.us

Order details: Screw-in RTD temperature probes with connecting cable

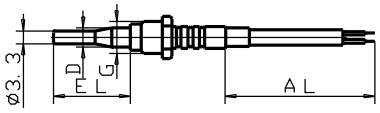

		(1) Basic version
	902050/30	Screw-in RTD temperature probe with loose screw fitting and stepped protection tube
		(2) Operating temperature in °C / connecting cable
x	380	-50 to +200°C / silicone
		(3) Measuring insert
x	1001	1 x Pt100 in 3-wire circuit
x	1003	1 x Pt100 in 2-wire circuit
		(4) Tolerance class to EN 60 751
x	1	Class B (standard)
x	2	Class A
		(5) Protection tube diameter D in mm
x	5.4	5.4mm dia. stepped down to 3.3mm
		(6) Fitting length EL in mm
x	27.5	27.5mm
		(7) Process connection
x	114	thread M 10 x 1
		(8) Connecting cable end
x	03	bare cable ends
x	11	ferrules to DIN 46 228 Part 4 (standard)
x	13	receptacle 6.3 to DIN 46 247
x	80	multipole connector (please specify type in plain text)
x	99	to customer specification
		(9) Connecting cable length AL in mm (500≤ AL ≤500000)
x	2500	2500mm
x	...	please specify in plain text (500mm steps)
		(10) Extra codes
x	000	no extra code
x	315	cable protector: coil
x	316	cable protector: tube
x	317	shielded connecting cable

	(1)		(2)		(3)		(4)		(5)		(6)		(7)		(8)		(9)		(10)	
Order code	[ ]	-	[ ]	-	[ ]	-	[ ]	-	[ ]	-	[ ]	-	[ ]	-	[ ]	-	[ ]	/	[ ]	,...
Order example	902050/30	-	380	-	1003	-	1	-	5.4	-	27.5	-	114	-	11	-	2500	/	000[1]	

1.List extra codes in sequence, separated by commas.

JUMO GmbH & Co. KG
Delivery address: Mackenrodtstraße 14, 36039 Fulda, Germany
Postal address: 36035 Fulda, Germany
Phone: +49 661 6003-0
Fax: +49 661 6003-607
E-mail: mail@jumo.net
Internet: www.jumo.net

JUMO Instrument Co. Ltd.
JUMO House
Temple Bank, Riverway
Harlow - Essex CM20 2DY, UK
Phone: +44 1279 63 55 33
Fax: +44 1279 63 52 62
E-mail: sales@jumo.co.uk
Internet: www.jumo.co.uk

JUMO Process Control, Inc.
8 Technology Boulevard
Canastota, NY 13032, USA
Phone: 315-697-JUMO
1-800-554-JUMO
Fax: 315-697-5867
E-mail: info@jumo.us
Internet: www.jumo.us

Order details: Screw-in RTD temperature probes with connecting cable

(1) Basic version

902050/40 Screw-in RTD temperature probe, screw-in protection tube

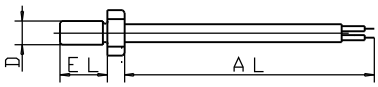

		(2) Operating temperature in °C / connecting cable
x	380	-50 to +200°C / silicone
x	390	-50 to +300°C / metal braiding
x	724	-5 to +80°C / PVC
x	912	5 to 105°C / PVC (only with 1 x 2-wire or 3-wire circuit)
		(3) Measuring insert
x	1001	1 x Pt100 in 3-wire circuit
x	1003	1 x Pt100 in 2-wire circuit
		(4) Tolerance class to EN 60 751
x	1	Class B (standard)
x	2	Class A
		(5) Protection tube diameter D in mm
x	8	M 8
		(6) Fitting length EL in mm
x	25	25mm
		(7) Process connection
x	111	thread M 8
		(8) Connecting cable end
x	03	bare cable ends
x	11	ferrules to DIN 46 228 Part 4 (standard)
x	13	receptacle 6.3 to DIN 46 247
x	80	multipole connector (please specify type in plain text)
x	99	to customer specification
		(9) Connecting cable length AL in mm (500≤ AL ≤500000)
x	2500	2500mm
x	...	please specify in plain text (500mm steps)
		(10) Extra codes
x	000	no extra code
x	315	cable protector: coil
x	316	cable protector: tube
x	317	shielded connecting cable

	(1)		(2)		(3)		(4)		(5)		(6)		(7)		(8)		(9)		(10)	
Order code	[ ]	-	[ ]	-	[ ]	-	[ ]	-	[ ]	-	[ ]	-	[ ]	-	[ ]	-	[ ]	/	[ ]	,...
Order example	902050/40	-	390	-	1003	-	1	-	8	-	25	-	111	-	11	-	2500	/	000[1]	

1.List extra codes in sequence, separated by commas.

Stock versions:

(1)		(2)		(3)		(4)		(5)		(6)		(7)		(8)		(9)		(10)	Sales No.
[ ]	-	[ ]	-	[ ]	-	[ ]	-	[ ]	-	[ ]	-	[ ]	-	[ ]	-	[ ]	/	[ ]	
902050/10	-	380	-	1001	-	1	-	6	-	100	-	104	-	11	-	2500	/	316	90/00065232
902050/10	-	380	-	1001	-	1	-	6	-	250	-	104	-	11	-	2500	/	316	90/00065235
902050/20	-	130	-	1003	-	1	-	6	-	37	-	114	-	11	-	2500	/	315,317	90/00055644
902050/20	-	130	-	1001	-	1	-	6	-	37	-	114	-	11	-	2500	/	315,317	90/00055646
902050/30	-	380	-	1001	-	1	-	5.4	-	27.5	-	114	-	11	-	2500	/	316	90/00089972
902050/40	-	390	-	1003	-	1	-	8	-	25	-	111	-	11	-	2500	/	315,317	90/00055722
902050/40	-	390	-	1001	-	1	-	8	-	25	-	111	-	11	-	2500	/	315,317	90/00055732

JUMO GmbH & Co. KG
Delivery address: Mackenrodtstraße 14,
36039 Fulda, Germany
Postal address: 36035 Fulda, Germany
Phone: +49 661 6003-0
Fax: +49 661 6003-607
E-mail: mail@jumo.net
Internet: www.jumo.net

JUMO Instrument Co. Ltd.
JUMO House
Temple Bank, Riverway
Harlow - Essex CM20 2DY, UK
Phone: +44 1279 63 55 33
Fax: +44 1279 63 52 62
E-mail: sales@jumo.co.uk
Internet: www.jumo.co.uk

JUMO Process Control, Inc.
8 Technology Boulevard
Canastota, NY 13032, USA
Phone: 315-697-JUMO
1-800-554-JUMO
Fax: 315-697-5867
E-mail: info@jumo.us
Internet: www.jumo.us

Screw-in melt RTD temperature probes

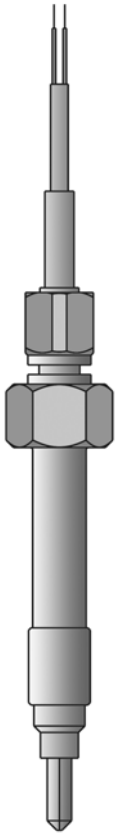

- Temperature range from -50 to +400°C
- Various probe tips available
- Stainless steel thermowell and probe tip
- Ceramic insulated probe tip
- In 2-wire, 3-wire or 4-wire-circuit
- For application in the plastics processing industry

Screw-in melt RTD temperature probes are preferably used for temperature measurement to record the melt temperature in the plastics processing industry.
Blade shaped or plane probe tips ensure optimum temperature recording depending on the requirements. Depending on their version, the connection lines are suitable for a temperature range of -50 to +400°C.
The measuring insert is equipped with a Pt 100 temperature probe as per DIN EN 60 751, class B in 2-wire-circuit. Connection is also available in 3-wire or 4-wire-circuit as an option.

Technical Data

Connection	Stripped wire ends, with ferrules, also available with multi-pole connector, Connector, 2/4-pin, IP50
Cable	PTFE, ambient temperature -190 to +260°C PTFE metal braiding, ambient temperature -50 to +260°C metal braiding, ambient temperature -50 to +400°C
Process connection	thread, stainless steel 1.4571
Thermowell	stainless steel 1.4571
Measuring insert	Pt-100 temperature sensor, DIN EN 60 751, Class B, two-wire circuit
Accessories	Mating connector 2/4-pin, size II, data sheet 90.9726, Pos. 5

JUMO GmbH & Co. KG
Delivery address: Mackenrodtstraße 14,
36039 Fulda, Germany
Postal address: 36035 Fulda, Germany
Phone: +49 661 6003-0
Fax: +49 661 6003-607
E-mail: mail@jumo.net
Internet: www.jumo.net

JUMO Instrument Co. Ltd.
JUMO House
Temple Bank, Riverway
Harlow - Essex CM20 2DY, UK
Phone: +44 1279 63 55 33
Fax: +44 1279 63 52 62
E-mail: sales@jumo.co.uk
Internet: www.jumo.co.uk

JUMO Process Control, Inc.
8 Technology Boulevard
Canastota, NY 13032, USA
Phone: 315-697-JUMO
1-800-554-JUMO
Fax: 315-697-5867
E-mail: info@jumo.us
Internet: www.jumo.us

Dimensions

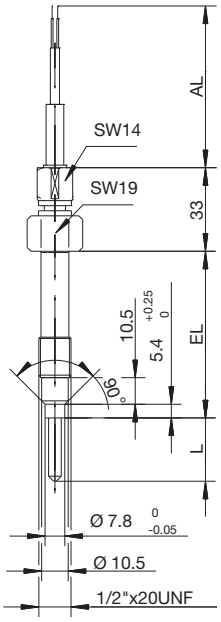

Type 902090/10 ...
1/2“x20 UNF

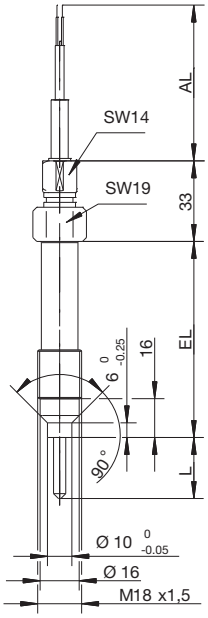

Type 902090/10 ...
M 18x1.5

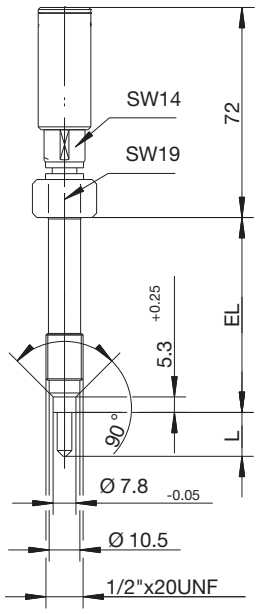

Type 902090/20 ...
1/2“x20 UNF

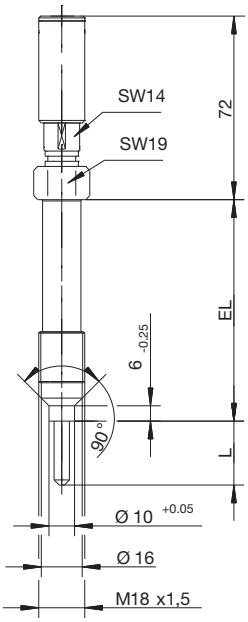

Type 902090/20 ...
M 18x1.5

JUMO GmbH & Co. KG
Delivery address: Mackenrodtstraße 14,
36039 Fulda, Germany
Postal address: 36035 Fulda, Germany
Phone: +49 661 6003-0
Fax: +49 661 6003-607
E-mail: mail@jumo.net
Internet: www.jumo.net

JUMO Instrument Co. Ltd.
JUMO House
Temple Bank, Riverway
Harlow - Essex CM20 2DY, UK
Phone: +44 1279 63 55 33
Fax: +44 1279 63 52 62
E-mail: sales@jumo.co.uk
Internet: www.jumo.co.uk

JUMO Process Control, Inc.
8 Technology Boulevard
Canastota, NY 13032, USA
Phone: 315-697-JUMO
1-800-554-JUMO
Fax: 315-697-5867
E-mail: info@jumo.us
Internet: www.jumo.us

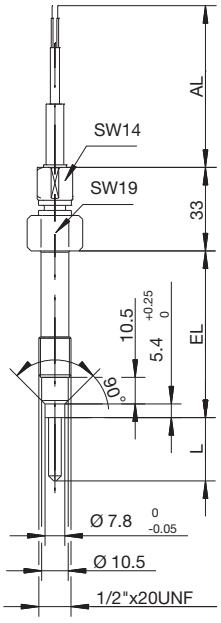

Type 902090/50 ...
1/2“x20 UNF

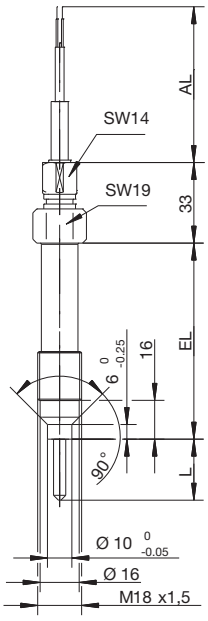

Type 902090/50 ...
M 18x1.5

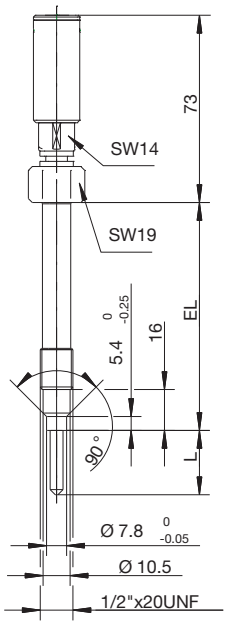

Type 902090/60 ...
1/2“x20 UNF

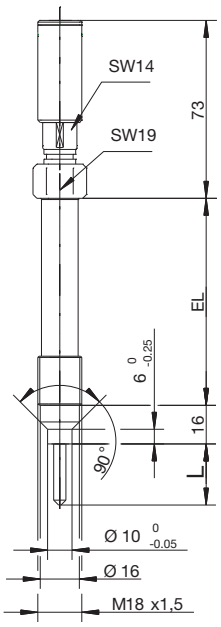

Type 902090/60 ...
M 18x1.5

JUMO GmbH & Co. KG
Delivery address: Mackenrodtstraße 14, 36039 Fulda, Germany
Postal address: 36035 Fulda, Germany
Phone: +49 661 6003-0
Fax: +49 661 6003-607
E-mail: mail@jumo.net
Internet: www.jumo.net

JUMO Instrument Co. Ltd.
JUMO House
Temple Bank, Riverway
Harlow - Essex CM20 2DY, UK
Phone: +44 1279 63 55 33
Fax: +44 1279 63 52 62
E-mail: sales@jumo.co.uk
Internet: www.jumo.co.uk

JUMO Process Control, Inc.
8 Technology Boulevard
Canastota, NY 13032, USA
Phone: 315-697-JUMO
1-800-554-JUMO
Fax: 315-697-5867
E-mail: info@jumo.us
Internet: www.jumo.us

Order details: Screw-in melt RTD temperature probes

(1) Basic type

902090/10 — Screw-in melt RTD temperature probes with connection cable

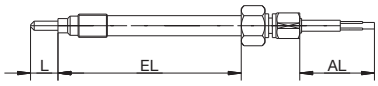

902090/20 — Screw-in melt RTD temperature probes with plug connector (LEMO device outlet ERA-2S)

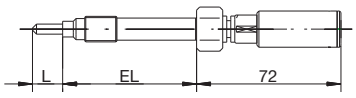

902090/50 — Screw-in melt RTD temperature probes with connection cable and ceramic insulated probe tip

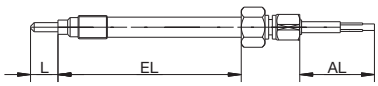

902090/60 — Screw-in melt RTD temperature probes with plug connector (LEMO device outlet ERA-2S) and ceramic insulated probe tip

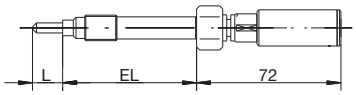

					(2) Operating temperature range in °C/cable type
x	x	x	x	386	-50 to +260°C/PTFE
x	x	x	x	388	-50 to +260°C/PTFE metal braiding
x	x	x	x	402	-50 to +400°C/Metal braiding
					(3) Measuring insert
x	x	x	x	1001	1x Pt 100 in 3-wire-circuit
x	x	x	x	1003	1x Pt 100 in 2-wire circuit
x	x	x	x	1011	1x Pt 100 in 4-wire circuit
x				2001	2x Pt 100 in 3-wire-circuit
x	x			2003	2x Pt 100 in 2-wire circuit
					(4) Tolerance class according to DIN EN 60751
x	x	x	x	1	Class B (standard)
x	x	x	x	2	Class A
					(5) Fitting length EL in mm
x	x	x	x	152	152mm (Standard)
x	x	x	x	...	Specifications in plain text
					(6) Probe tip shape
x	x			1	Flat
x	x	x	x	4	Blade
					(7) Probe tip length L in mm
x	x			0	Flat
x	x	x	x	5	5mm
x	x	x	x	10	10mm
x	x	x	x	15	15mm
x	x	x	x	20	20mm
x	x	x	x	25	25mm
					(8) Material/surface of the probe tip
x	x	x	x	26	1.4571 (Standard)
x	x	x	x	39	1.4571 coating as per agreement
					(9) Process connection
x	x	x	x	126	M 18x1.5
x	x	x	x	153	1/2“x20 UNF
					(10) Cable termination
	x		x	00	None
x		x		03	stripped wires
x		x		11	Ferrules as per DIN 46 228 Part 4 (Standard)
x		x		80	Multi-pole connector (enter type in plain text)
					(11) Connection cable length AL in mm
	x		x	0000	None
x		x		3000	3000mm
x		x		...	Please specify in plain text (500mm steps)
					(12) Extra codes
x	x	x	x	000	None
x		x		315	Anti-kink spring
x		x		853	Metal protection hose on the connection line

	(1)		(2)		(3)		(4)		(5)		(6)		(7)		(8)		(9)		(10)		(11)		(12)	
Order code		-		-		-		-		-		-		-		-		-		-		/		, ...[1]
Order example	902090/10	-	402	-	1003	-	1	-	152	-	4	-	15	-	26	-	153	-	11	-	3000	/	000	

[1] List extra codes in sequence, separated by commas.

JUMO GmbH & Co. KG
Delivery address: Mackenrodtstraße 14,
36039 Fulda, Germany
Postal address: 36035 Fulda, Germany
Phone: +49 661 6003-0
Fax: +49 661 6003-607
E-mail: mail@jumo.net
Internet: www.jumo.net

JUMO Instrument Co. Ltd.
JUMO House
Temple Bank, Riverway
Harlow - Essex CM20 2DY, UK
Phone: +44 1279 63 55 33
Fax: +44 1279 63 52 62
E-mail: sales@jumo.co.uk
Internet: www.jumo.co.uk

JUMO Process Control, Inc.
8 Technology Boulevard
Canastota, NY 13032, USA
Phone: 315-697-JUMO
1-800-554-JUMO
Fax: 315-697-5867
E-mail: info@jumo.us
Internet: www.jumo.us

Stock version

(1)		(2)		(3)		(4)		(5)		(6)		(7)		(8)		(9)		(10)		(11)		(12)	Part No.
902090/10	-	402	-	1001	-	1	-	152	-	4	-	10	-	26	-	153	-	11	-	3000	/	000	90/00515674

JUMO GmbH & Co. KG
Delivery address: Mackenrodtstraße 14, 36039 Fulda, Germany
Postal address: 36035 Fulda, Germany
Phone: +49 661 6003-0
Fax: +49 661 6003-607
e-mail: mail@jumo.net
Internet: www.jumo.net

JUMO Instrument Co. Ltd.
JUMO House
Temple Bank, Riverway
Harlow, Essex CM20 2DY, UK
Phone: +44 1279 635533
Fax: +44 1279 635262
e-mail: sales@jumo.co.uk
Internet: www.jumo.co.uk

JUMO Process Control, Inc.
8 Technology Boulevard
Canastota, NY 13032, USA
Phone: 315-697-JUMO
1-800-554-JUMO
Fax: 315-697-5867
e-mail: info@jumo.us
Internet: www.jumo.us

Push-in RTD temperature probes with terminal head form B

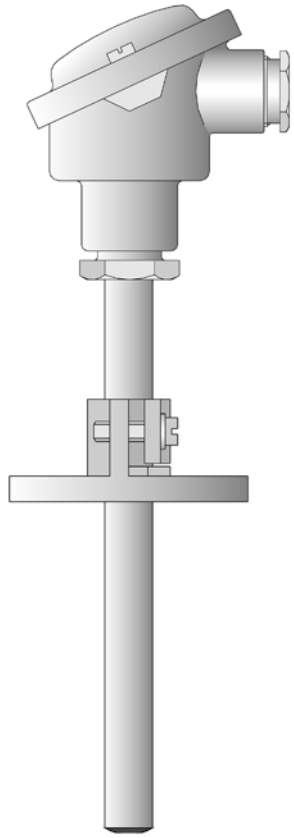

- **For temperatures from -50 to +600 °C**
- **with replaceable measuring insert**
- **As single or double RTD temperature probes**
- **Connection head form B, BUZ, BUZH, BBK**
- **Available with transmitter**

Push-in RTD temperature probes are preferentially used for measuring temperatures in liquids and gasses. Application areas encompass, among others, the air conditioning technology and refrigeration engineering, as well as the heating system, kiln and apparatus engineering sector, and in process technology.
The connection head is suitable for ambient temperatures up to +100 C. The versions BUZ, BUZH and BBK are also available in addition to the standard connection head, form B.
The measuring insert is normally fitted with a Pt100 temperature probe as per DIN EN 60751, class B in 2-wire circuit, versions with Pt500 or Pt1000 are also possible. Connection is available in 3-wire or 4-wire-circuitry as an option. A transmitter can be optionally integrated into the connection head.

Technical data

Terminal head	Form B DIN 43729, die-cast aluminum, M 20x1.5; IP65, ambient temperature -40 to +100 °C Form BUZ, die-cast aluminum, M 20x1.5; IP65, ambient temperature -40 to +100 °C Form BUZH, die-cast aluminum, M 20x1.5; IP65, ambient temperature -40 to+ 100 °C Form BBK, plastic, M 20x1.5; IP54, ambient temperature -30 to +130 °C Caution: reduced ambient temperature range when using transmitters, data sheets 70.7010, 70.7030 and 70.7060
Process connection	Sheet steel flange Ø 9 mm, Ø 11 mm, galvanized steel Stop flange Ø 15 mm, DIN 43734, gray cast iron Pipe screw-connection Ø 12 mm, Ø 15 mm, stainless steel
Sheath	Stainless steel 1.4571, Ø 9 mm, Ø 11 mm, Ø 15 mm
Measuring insert	Replaceable, Pt100 temperature probe, DIN EN 60751, class B, 2-wire circuit
Transmitter	analog transmitter, 4 to 20 mA output, data sheet 70.7030 analog transmitter, 0 to 10 V output, data sheet 70.7030 programmable transmitter, 4 to 20 mA/20 to 4 mA output, data sheet 70.7010 Wtrans B programmable head transducer with radio transmission, data sheet 70.7060 (suitable Wtrans receivers, data sheet 90.2931)

JUMO GmbH & Co. KG
Delivery address: Mackenrodtstraße 14, 36039 Fulda, Germany
Postal address: 36035 Fulda, Germany
Phone: +49 661 6003-0
Fax: +49 661 6003-607
e-mail: mail@jumo.net
Internet: www.jumo.net

JUMO Instrument Co. Ltd.
JUMO House
Temple Bank, Riverway
Harlow, Essex CM20 2DY, UK
Phone: +44 1279 635533
Fax: +44 1279 635262
e-mail: sales@jumo.co.uk
Internet: www.jumo.co.uk

JUMO Process Control, Inc.
8 Technology Boulevard
Canastota, NY 13032, USA
Phone: 315-697-JUMO
1-800-554-JUMO
Fax: 315-697-5867
e-mail: info@jumo.us
Internet: www.jumo.us

Dimensions

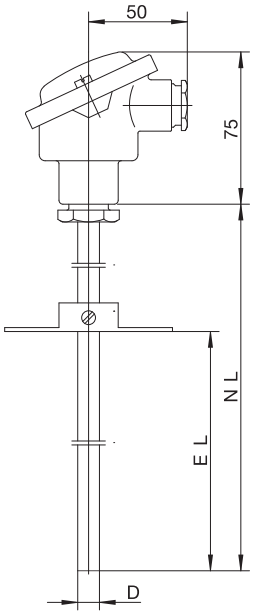

Basic type 902120/10

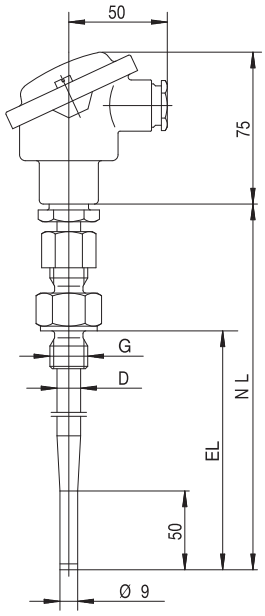

Basic type 902120/11

JUMO GmbH & Co. KG
Delivery address: Mackenrodtstraße 14, 36039 Fulda, Germany
Postal address: 36035 Fulda, Germany
Phone: +49 661 6003-0
Fax: +49 661 6003-607
e-mail: mail@jumo.net
Internet: www.jumo.net

JUMO Instrument Co. Ltd.
JUMO House
Temple Bank, Riverway
Harlow, Essex CM20 2DY, UK
Phone: +44 1279 635533
Fax: +44 1279 635262
e-mail: sales@jumo.co.uk
Internet: www.jumo.co.uk

JUMO Process Control, Inc.
8 Technology Boulevard
Canastota, NY 13032, USA
Phone: 315-697-JUMO
1-800-554-JUMO
Fax: 315-697-5867
e-mail: info@jumo.us
Internet: www.jumo.us

Order specifications: Push-in RTD temperature probe with connection head form B

		(1) Basic type
	902120/10	Push-in RTD temperature probes with continuous sheath

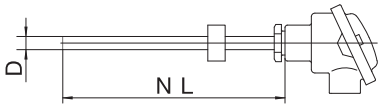

		(2) Operating temperature in °C
x	150	-200 to +600 °C
x	402	-50 to +400 °C (standard)
x	415	-50 to +600 °C
		(3) Measuring insert
x	1001	1x Pt100 in 3-wire-circuit
x	1003	1x Pt100 in 2-wire circuit
x	1011	1x Pt100 in 4-wire circuit
x	2001	2x Pt100 in 3-wire circuit
x	2003	2x Pt100 in 2-wire circuit
		(4) Tolerance class as per DIN EN 60751
x	1	Class B (standard)
x	2	Class A
		(5) Sheath diameter D in mm
x	9	Ø 9 mm
x	11	Ø 11 mm
x	15	Ø 15 mm
		(6) Nominal length NL in mm (100≤NΛ£1000)
x	180	180 mm, fitting length (EL) 100 to 140 mm
x	270	270 mm, fitting length (EL) 100 to 230 mm
x	290	290 mm, fitting length (EL) 100 to 250 mm
x	350	350 mm, fitting length (EL) 100 to 310 mm
x	410	410 mm, fitting length (EL) 100 to 370 mm
x	420	420 mm, fitting length (EL) 100 to 400 mm
x	500	500 mm, fitting length (EL) 100 to 460 mm
x	710	710 mm, fitting length (EL) 100 to 670 mm
x	1000	1000 mm, fitting length (EL) 100 to 960 mm
x	...	Specification in plain text (50 mm steps)
		(7) Process connection
x	000	without process connection
x	254	Sheath screw connection G 1/2 (for a 15 mm diameter only)
x	663	Sheet steel flange Ø 9 mm
x	665	Sheet steel flange Ø 11 mm
x	668	Stop flange Ø 15 mm, DIN 43734
		(8) Extra codes
x	000	no extra code
x	320	terminal head Form BUZ
x	321	terminal head Form BUZH
x	322	Connection head form BBK
x	330	1x analog transmitter, 4 to 20 mA[2] output, data sheet 70.7030
x	331	1x transmitter programmable output 4 to 20 mA/20 to 4 mA[3], data sheet 70.7010
x	333	1x analog transmitter, 0 to 10 V[2] output, data sheet 70.7030
x	334	2x analog transmitters, 4 to 20 mA[2] output, data sheet 70.7030
x	335	2x transmitter programmable output 4 to 20 mA/20 to 4 mA[3], data sheet 70.7010
x	337	2x analog transmitters, 0 to 10V [2] output, data sheet 70.7030
x	859	1x Wtrans B programmable head transducer with radio transmission, data sheet 70.7060

	(1)		(2)		(3)		(4)		(5)		(6)		(7)		(8)	
Order code	[ ]	-	[ ]	-	[ ]	-	[ ]	-	[ ]	-	[ ]	-	[ ]	/	[ ]	, ...[1]
Order example	902120/10	-	402	-	1001	-	1	-	9	-	410	-	663	/	000	

[1] List extra codes in sequence, separated by commas.
[2] Specify measuring range in plain text.
[3] Specify measuring range and output signal in plain text.

JUMO GmbH & Co. KG
Delivery address: Mackenrodtstraße 14, 36039 Fulda, Germany
Postal address: 36035 Fulda, Germany
Phone: +49 661 6003-0
Fax: +49 661 6003-607
e-mail: mail@jumo.net
Internet: www.jumo.net

JUMO Instrument Co. Ltd.
JUMO House
Temple Bank, Riverway
Harlow, Essex CM20 2DY, UK
Phone: +44 1279 635533
Fax: +44 1279 635262
e-mail: sales@jumo.co.uk
Internet: www.jumo.co.uk

JUMO Process Control, Inc.
8 Technology Boulevard
Canastota, NY 13032, USA
Phone: 315-697-JUMO
1-800-554-JUMO
Fax: 315-697-5867
e-mail: info@jumo.us
Internet: www.jumo.us

Order specifications: Push-in RTD temperature probe with connection head form B

		(1) Basic type
	902120/11	Push-in RTD temperature probes with stepped sheath
		(2) Operating temperature in °C
x	150	-200 to +600 °C
x	402	-50 to +400 °C (standard)
x	415	-50 to +600 °C
		(3) Measuring insert
x	1001	1x Pt100 in 3-wire-circuit
x	1003	1x Pt100 in 2-wire circuit
x	1011	1x Pt100 in 4-wire circuit
x	2001	2x Pt100 in 3-wire circuit
x	2003	2x Pt100 in 2-wire circuit
		(4) Tolerance class as per DIN EN 60751
x	1	Class B (standard)
x	2	Class A
		(5) Sheath diameter D in mm
x	12	Ø 12 mm stepped down to 9 mm
		(6) Nominal length NL in mm (100≤NΛ£700)
x	180	180 mm, fitting length (EL) 100 to 140 mm
x	270	270 mm, fitting length (EL) 100 to 230 mm
x	290	290 mm, fitting length (EL) 100 to 250 mm
x	350	350 mm, fitting length (EL) 100 to 310 mm
x	410	410 mm, fitting length (EL) 100 to 370 mm
x	500	500 mm, fitting length (EL) 100 to 460 mm
x	...	Specification in plain text (50 mm steps)
		(7) Process connection
x	000	without process connection
x	254	Sheath screw-connection G 1/2
		(8) Extra codes
x	000	no extra code
x	320	terminal head Form BUZ
x	321	terminal head Form BUZH
x	322	Connection head form BBK
x	330	1x analog transmitter, 4 to 20 mA[2] output, data sheet 70.7030
x	331	1x transmitter programmable output 4 to 20 mA/20 to 4 mA[3], data sheet 70.7010
x	333	1x analog transmitter, 0 to 10 V[2] output, data sheet 70.7030
x	334	2x analog transmitters, 4 to 20 mA[2] output, data sheet 70.7030
x	335	2x transmitter programmable output 4 to 20 mA/20 to 4 mA[3], data sheet 70.7010
x	337	2x analog transmitters, 0 to 10 V[2] output, data sheet 70.7030
x	859	1x Wtrans B programmable head transducer with radio transmission, data sheet 70.7060

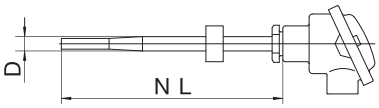

	(1)		(2)		(3)		(4)		(5)		(6)		(7)		(8)
Order code	[ ]	-	[ ]	-	[ ]	-	[ ]	-	[ ]	-	[ ]	-	[ ]	/	[ ], ...[1]
Order example	902120/11	-	402	-	1001	-	1	-	12	-	410	-	000	/	000

[1] List extra codes in sequence, separated by commas.
[2] Specify measuring range in plain text.
[3] Specify measuring range and output signal in plain text.

JUMO GmbH & Co. KG
Delivery address: Mackenrodtstraße 14, 36039 Fulda, Germany
Postal address: 36035 Fulda, Germany
Phone: +49 661 6003-0
Fax: +49 661 6003-607
e-mail: mail@jumo.net
Internet: www.jumo.net

JUMO Instrument Co. Ltd.
JUMO House
Temple Bank, Riverway
Harlow, Essex CM20 2DY, UK
Phone: +44 1279 635533
Fax: +44 1279 635262
e-mail: sales@jumo.co.uk
Internet: www.jumo.co.uk

JUMO Process Control, Inc.
8 Technology Boulevard
Canastota, NY 13032, USA
Phone: 315-697-JUMO
1-800-554-JUMO
Fax: 315-697-5867
e-mail: info@jumo.us
Internet: www.jumo.us

Stock versions

(1)		(2)		(3)		(4)		(5)		(6)		(7)		(8)	Sales No.:
902120/10	-	415	-	1003	-	1	-	15	-	500	-	668	/	000	90/00055514
902120/10	-	402	-	1003	-	1	-	11	-	180	-	665	/	000	90/00055681

Accessories for programmable 2-wire transmitter type 707010 in the accessories data sheet 70.9770

Part	Sales No.:
PC interface with TTL/RS232 converter and adapter (socket connector)	70/00350260
PC interface with USB/TTL converter, adapter (socket connector) and adapter (pins)	70/00456352
Special programming (standard measuring range 0 to 100 °C)	-
Setup program on CD-ROM, multilingual	70/00378733

Accessories for Wtrans B, programmable head transmitter with radio transmission Type 707060

Part	Sales No.:
Lithium battery 3.6 V, 2.2 Ah (size AA)	70/00547559
PC interface with USB/TTL converter, adapter (socket) and adapter (pins)	70/00456352
PC interface with TTL/RS232 converter and adapter (socket connector)	70/00350260
Setup program on CD-ROM, multilingual	70/00488887
Setup program including OnlineChart on CD-ROM, multilingual	70/00549067
OnlineChart activation	70/00549188

JUMO GmbH & Co. KG
Delivery address: Mackenrodtstraße 14, 36039 Fulda, Germany
Postal address: 36035 Fulda, Germany
Phone: +49 661 6003-0
Fax: +49 661 6003-607
e-mail: mail@jumo.net
Internet: www.jumo.net

JUMO Instrument Co. Ltd.
JUMO House
Temple Bank, Riverway
Harlow, Essex CM20 2DY, UK
Phone: +44 1279 635533
Fax: +44 1279 635262
e-mail: sales@jumo.co.uk
Internet: www.jumo.co.uk

JUMO Process Control, Inc.
8 Technology Boulevard
Canastota, NY 13032, USA
Phone: 315-697-JUMO
1-800-554-JUMO
Fax: 315-697-5867
e-mail: info@jumo.us
Internet: www.jumo.us

JUMO Etemp B

Push-in RTD temperature probe with connection head form B for standard applications

- Temperature range from -50 to +400 °C
- With built-in measuring insert
- As single or double RTD temperature probes
- Terminal head form B or BUZ
- Available with transmitter

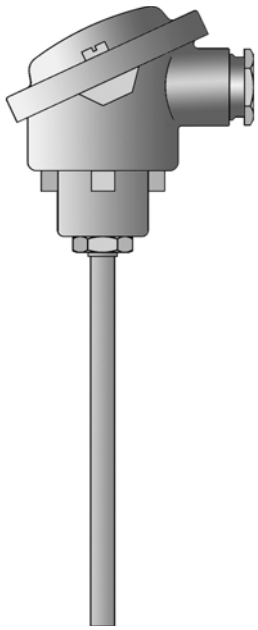

Basic type 902123/10

Brief description

Push-in RTD temperature probes for standard applications are preferentially used for measuring temperatures in liquids and gases. The application areas are, among others, in the air conditioning technology and refrigeration engineering as well as the HVAC and apparatus engineering sector.

The connection head is suitable for ambient temperatures up to +100 °C. In addition to the standard connection head form B, design BUZ is also available.

The measuring insert is normally fitted with a Pt100 temperature sensor according to DIN EN 60751, Class B in 2-wire circuit; versions with Pt500 or Pt1000 temperature sensors can also be supplied, as well as 4-wire circuit connections. A transmitter can be optionally integrated into the connection head.

Technical data

Terminal head	Form B DIN EN 50446, die-cast aluminum, M 20x1.5; IP65, ambient temperature -40 to +100 °C Form BUZ, die-cast aluminum, M 20x1.5; IP65, ambient temperature -40 to +100 °C Reduced ambient temperature when using transmitters, data sheet 707030 and 707010
Protection tube	Stainless steel 1.4571, ∅ 6 mm, ∅ 8 mm
Measuring insert	Pt100 temperature sensor DIN EN 60751, cl. B, 2-wire circuit, built-in
Response times	$t_{0.5}$ = 5 s, $t_{0.9}$ = 14 s in water 0.4 m/s; ∅ 6 mm
Transmitter	Analog transmitter, output 4 to 20 mA, data sheet 707030 Analog transmitter, output 0 to 10 V, data sheet 707030 Programmable transmitter, output 4 to 20 mA/20 to 4 mA, data sheet 707010
Accessories	Process connection, tube screw connection ∅ 6 mm, ∅ 8 mm Process connection, sheet steel flange ∅ 6 mm, ∅ 8 mm

JUMO GmbH & Co. KG
Delivery address: Mackenrodtstraße 14, 36039 Fulda, Germany
Postal address: 36035 Fulda, Germany
Phone: +49 661 6003-0
Fax: +49 661 6003-607
e-mail: mail@jumo.net
Internet: www.jumo.net

JUMO Instrument Co. Ltd.
JUMO House
Temple Bank, Riverway
Harlow, Essex CM20 2DY, UK
Phone: +44 1279 635533
Fax: +44 1279 635262
e-mail: sales@jumo.co.uk
Internet: www.jumo.co.uk

JUMO Process Control, Inc.
8 Technology Boulevard
Canastota, NY 13032, USA
Phone: 315-697-JUMO
1-800-554-JUMO
Fax: 315-697-5867
e-mail: info@jumo.us
Internet: www.jumo.us

Dimensions

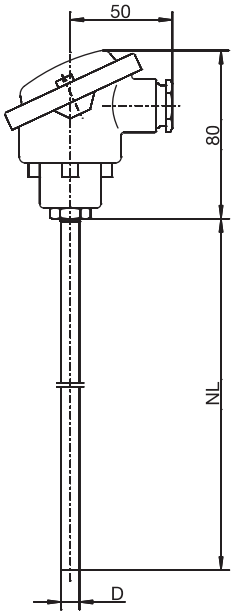

Basic type 902123/10

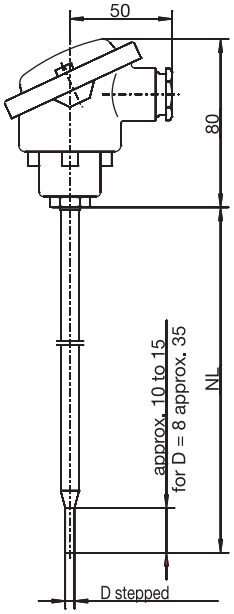

Basic type 902123/11

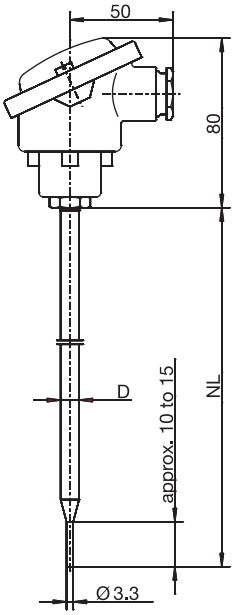

Basic type 902123/31

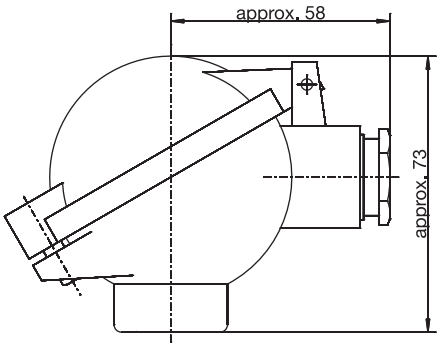

Terminal head form BUZ
Extra code 320

JUMO GmbH & Co. KG
Delivery address: Mackenrodtstraße 14, 36039 Fulda, Germany
Postal address: 36035 Fulda, Germany
Phone: +49 661 6003-0
Fax: +49 661 6003-607
e-mail: mail@jumo.net
Internet: www.jumo.net

JUMO Instrument Co. Ltd.
JUMO House
Temple Bank, Riverway
Harlow, Essex CM20 2DY, UK
Phone: +44 1279 635533
Fax: +44 1279 635262
e-mail: sales@jumo.co.uk
Internet: www.jumo.co.uk

JUMO Process Control, Inc.
8 Technology Boulevard
Canastota, NY 13032, USA
Phone: 315-697-JUMO
1-800-554-JUMO
Fax: 315-697-5867
e-mail: info@jumo.us
Internet: www.jumo.us

Order details

(1) Basic type

			902123/10	JUMO Etemp B Push-in RTD temperature probes with terminal head form B and with continuous sheath
			902123/11	JUMO Etemp B Push-in RTD temperature probes with terminal head form B and with stepped sheath (for ∅ 6 mm on ∅ 3.8 mm/for ∅ 8 mm on ∅ 6 mm)
			902123/31	JUMO Etemp B Push-in RTD temperature probes with terminal head form B and with stepped sheath for air measurement

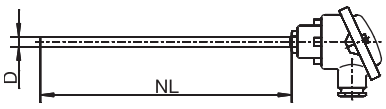

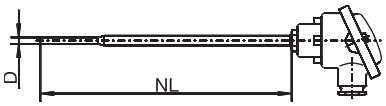

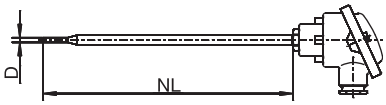

(2) Operating temperature in °C

x	x	x	380	-50 to +200 °C (standard)
x	x		386	-50 to +260 °C
x	x		402	-50 to +400 °C
x	x		647	-20 to +150 °C (only in connection with class B and 1x Pt100 in 2-wire circuit)

(3) Measuring insert

x	x	x	1003	1x Pt100 in 2-wire circuit
x	x	x	1011	1x Pt100 in 4-wire circuit
x	x	x	2003	2x Pt100 in 2-wire circuit

(4) Tolerance class as per DIN EN 60751

x	x	x	1	Class B (standard)
x	x	x	2	Class A
x	x	x	3	Class AA (1/3 DIN B)

(5) Sheath diameter D in mm

x	x	x	6	∅ 6 mm
x	x		8	∅ 8 mm

(6) Nominal length NL in mm (NL 50 to 1000 mm, max. 800 mm for basic types 902123/11 and 902123/31)

x			50	50 mm
x	x	x	100	100 mm
x	x	x	200	200 mm
x	x	x	...	Please specify in plain text (50 mm steps)

(7) Extra codes

x	x	x	000	none
x	x	x	320	terminal head Form BUZ
x	x	x	330	1x transmitter, analog output 4 to 20 mA[a], data sheet 707030
x	x	x	331	1x programmable transmitter, 4 to 20 mA output[b], data sheet 707010
x	x	x	333	1x transmitter, analog output 0 to 10 V[a], data sheet 707030

[a] Specify measuring range in plain text.
[b] Specify measuring range and output signal in plain text.

JUMO GmbH & Co. KG
Delivery address: Mackenrodtstraße 14, 36039 Fulda, Germany
Postal address: 36035 Fulda, Germany
Phone: +49 661 6003-0
Fax: +49 661 6003-607
e-mail: mail@jumo.net
Internet: www.jumo.net

JUMO Instrument Co. Ltd.
JUMO House
Temple Bank, Riverway
Harlow, Essex CM20 2DY, UK
Phone: +44 1279 635533
Fax: +44 1279 635262
e-mail: sales@jumo.co.uk
Internet: www.jumo.co.uk

JUMO Process Control, Inc.
8 Technology Boulevard
Canastota, NY 13032, USA
Phone: 315-697-JUMO
1-800-554-JUMO
Fax: 315-697-5867
e-mail: info@jumo.us
Internet: www.jumo.us

	(1)		(2)		(3)		(4)		(5)		(6)		(7)	
Order code		-		-		-		-		-		/		, ...[a]
Order example	902123/10	-	380	-	1003	-	1	-	6	-	100	/	000	

[a] State extra codes one after another, separated by commas.

Accessories process connection

Article	Sales No.
Tube screw connection G 1/4 for sheath diameter 6 mm	90/00080811
Tube screw connection G 3/8 for sheath diameter 6 mm	90/00057945
Tube screw connection G 3/8 for sheath diameter 8 mm	90/00088927
Tube screw connection G 1/2 for sheath diameter 6 mm	90/00305445
Tube screw connection G 1/2 for sheath diameter 8 mm	90/00371506
Tube screw connection M 10x1 for sheath diameter 6 mm	90/00065416
Tube screw connection 1/2-14NPT for sheath diameter 6 mm	90/00444210
Tube screw connection 1/2-14NPT for sheath diameter 8 mm	90/00361956
Sheet steel flange for sheath diameter 6 mm	90/00065062
Sheet steel flange for sheath diameter 8 mm	90/00068165

For further process connections refer to data sheet 909750.

Stock versions

(1)		(2)		(3)		(4)		(5)		(6)		(7)	Sales No.:
902123/10	-	380	-	1003	-	1	-	6	-	250	/	000	90/00542850
902123/10	-	402	-	1003	-	1	-	6	-	250	/	000	90/00542851
902123/10	-	402	-	1003	-	1	-	6	-	300	/	000	90/00542852

JUMO GmbH & Co. KG
Delivery address: Mackenrodtstraße 14,
36039 Fulda, Germany
Postal address: 36035 Fulda, Germany
Phone: +49 661 6003-0
Fax: +49 661 6003-607
e-mail: mail@jumo.net
Internet: www.jumo.net

JUMO Instrument Co. Ltd.
JUMO House
Temple Bank, Riverway
Harlow, Essex CM 20 2TT, UK
Phone: +44 1279 635533
Fax: +44 1279 635262
e-mail: sales@jumo.co.uk
Internet: www.jumo.co.uk

JUMO Process Control, Inc.
8 Technology Boulevard
Canastota, NY 13032, USA
Phone: 315-697-JUMO
1-800-554-JUMO
Fax: 315-697-5867
e-mail: info@jumo.us
Internet: www.jumo.us

Push-in RTD temperature probe with terminal head form J

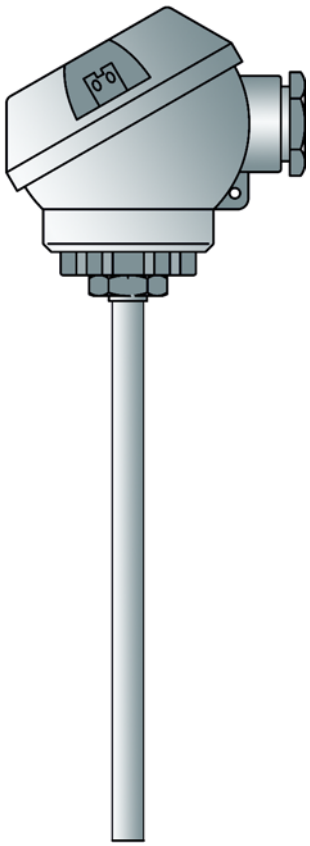

- **for temperatures from -50 ... +400°C**
- **As single or double RTD temperature probes**
- **Available with transmitter**
- **Protection class IP65**

Push-in RTD temperature probes are preferentially used for measuring temperatures in liquids and gases. A decisive selection criterion is the reliable sealing feature of this installation type with vacuum and with overpressure. The application areas are, among others, in the air conditioning technology and refrigeration engineering as well as the HVAC, kiln and apparatus engineering sector.

The measuring insert is normally fitted with a Pt 100 temperature sensor according to DIN EN 60 751, Class B in 2-wire circuit; versions with Pt 500 or Pt 1000 temperature sensors can also be supplied, as well as 3- and 4-wire circuit connections. A transmitter can be optionally integrated into the connection head.

Technical Data

Terminal head	Form J, die-cast aluminum, M 16x1.5; IP65, ambient temperature -40 ... +100°C Caution: reduced ambient temperature range when using transmitters, Data Sheet 70.7030
Process connection	Metal flange Ø 6mm, Ø 8mm, galvanized steel Thermowell screw-connection Ø 6mm, Ø 8mm, stainless steel Thermowell screw-connection, spring loaded Ø 8mm, spring deflection 12mm, stainless steel
Thermowell	Stainless steel 1.4571, Ø 6mm and Ø 8mm
Measuring insert	Pt 100 temperature sensor according to DIN EN 60 751, Class B, two-wire circuit
Transmitter	Analog transmitter, 4 ... 20mA output, Data sheet 70.7030
Accessories	Thermowell, Data Sheet 90.2440 and 90.9721

JUMO GmbH & Co. KG
Delivery address: Mackenrodtstraße 14,
36039 Fulda, Germany
Postal address: 36035 Fulda, Germany
Phone: +49 661 6003-0
Fax: +49 661 6003-607
e-mail: mail@jumo.net
Internet: www.jumo.net

JUMO Instrument Co. Ltd.
JUMO House
Temple Bank, Riverway
Harlow, Essex CM 20 2TT, UK
Phone: +44 1279 635533
Fax: +44 1279 635262
e-mail: sales@jumo.co.uk
Internet: www.jumo.co.uk

JUMO Process Control, Inc.
8 Technology Boulevard
Canastota, NY 13032, USA
Phone: 315-697-JUMO
1-800-554-JUMO
Fax: 315-697-5867
e-mail: info@jumo.us
Internet: www.jumo.us

Dimensions

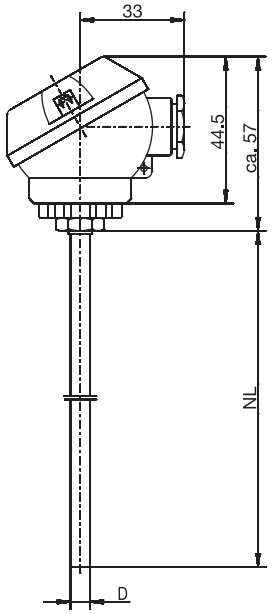

Type 902130/10

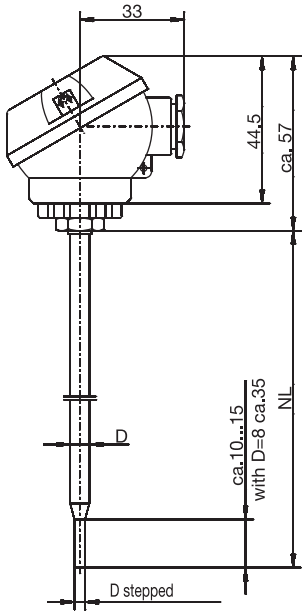

Type 902130/11

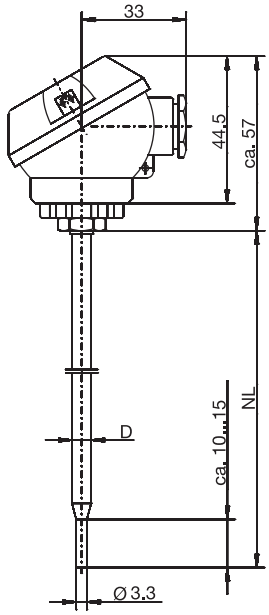

Type 902130/31

JUMO GmbH & Co. KG
Delivery address: Mackenrodtstraße 14, 36039 Fulda, Germany
Postal address: 36035 Fulda, Germany
Phone: +49 661 6003-0
Fax: +49 661 6003-607
e-mail: mail@jumo.net
Internet: www.jumo.net

JUMO Instrument Co. Ltd.
JUMO House
Temple Bank, Riverway
Harlow, Essex CM 20 2TT, UK
Phone: +44 1279 635533
Fax: +44 1279 635262
e-mail: sales@jumo.co.uk
Internet: www.jumo.co.uk

JUMO Process Control, Inc.
8 Technology Boulevard
Canastota, NY 13032, USA
Phone: 315-697-JUMO
1-800-554-JUMO
Fax: 315-697-5867
e-mail: info@jumo.us
Internet: www.jumo.us

Order details: Push-in RTD temperature probe with terminal head form J

(1) Basic type

902130/10 — Push-in RTD temperature probes with continuous thermowell

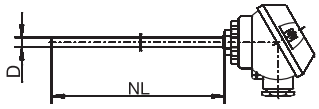

902130/11 — Push-in RTD temperature probes with stepped thermowell (with Ø 6 to 3.8mm; with Ø 8 to 6mm)

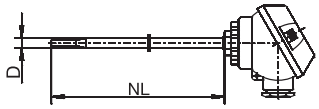

902130/31 — Push-in RTD temperature probes with stepped thermowell for air measurement

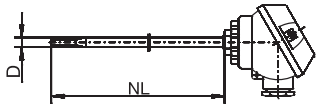

				(2) Operating temperature in °C
x	x		647	-20 ... +150°C (only in conjunction with tolerance class B)
x	x	x	380	-50 ... +200°C
x	x		386	-50 ... +260°C
x	x		402	-50 ... +400°C
				(3) Measuring insert
x	x		1001	1 x Pt 100 in 3-wire-circuit
x	x	x	1003	1 x Pt 100 in 2-wire circuit
x	x	x	1011	1 x Pt 100 in 4-wire circuit
x	x	x	2003	2 x Pt 100 in 2-wire circuit
				(4) Tolerance class according to DIN EN 60 751
x	x	x	1	Class B (standard)
x	x	x	2	Class A
				(5) Protection tube diameter D in mm
x	x	x	6	Ø 6mm
x	x		8	Ø 8mm
				(6) Nominal length NL in mm (50 ≤ NL ≤ 1000)
x	x	x	50	50mm
x	x	x	100	100mm
x	x	x	150	150mm
x	x	x	250	250mm
		x	290	290mm
x	x	x	...	Specification in plain text (50mm steps)
				(7) Process connection
x	x	x	000	without process connection
x			245	Thermowell screw connection, spring-loaded G 1/2, spring deflection 12mm (for Ø 8mm only, Tmax. 180°C)
x	x	x	252	Thermowell screw connection G 1/4 (for a 6mm diameter only)
x	x	x	254	Thermowell screw connection G 1/2 (for a 6mm or Ø 8mm diameter only)
x	x	x	662	Metal flange Ø 6mm
x			667	Metal flange Ø 8mm
				(8) Extra codes
x	x	x	000	Without
x	x	x	330	1 x analog transmitter, 4 ... 20mA[1] output, Data sheet 70.7030

	(1)		(2)		(3)		(4)		(5)		(6)		(7)		(8)
Order code		-		-		-		-		-		-		/	
Order example	902130/10	-	402	-	1001	-	1	-	6	-	100	-	000	/	000

Stock versions

(1)		(2)		(3)		(4)		(5)		(6)		(7)		(8)	Part No.
902130/10	-	402	-	1003	-	1	-	6	-	50	-	000	/	000	90/00063618
902130/10	-	402	-	1003	-	1	-	6	-	150	-	000	/	000	90/00063620
902130/10	-	402	-	1003	-	1	-	6	-	250	-	000	/	000	90/00063622
902130/10	-	647	-	1003	-	1	-	6	-	100	-	000	/	000	90/00533469
902130/10	-	647	-	1003	-	1	-	6	-	150	-	000	/	000	90/00533470
902130/10	-	647	-	1003	-	1	-	6	-	250	-	000	/	000	90/00533471
902130/31	-	380	-	1003	-	1	-	6	-	290	-	000	/	000	90/00438399

[1] Specify measuring range in plain text.

2009-10-20/00389506

JUMO GmbH & Co. KG
Delivery address: Mackenrodtstraße 14
36039 Fulda, Germany
Postal address: 36035 Fulda, Germany
Phone: +49 661 6003-0
Fax: +49 661 6003-607
E-mail: mail@jumo.net
Internet: www.jumo.net

JUMO Instrument Co. Ltd.
JUMO House
Temple Bank, Riverway
Harlow, Essex CM20 2DY, UK
Phone: +44 1279 635533
Fax: +44 1279 635262
E-mail: sales@jumo.co.uk
Internet: www.jumo.co.uk

JUMO Process Control, Inc.
6733 Myers Road
East Syracuse, NY 13057, USA
Phone: 315-437-5866
1-800-554-5866
Fax: 315-437-5860
E-mail: info.us@jumo.net
Internet: www.jumousa.com

Push-in RTD Temperature Probe with Connecting Cable

- **Temperature range from -50 to +400 °C**
- **As single or double RTD temperature probe**
- **In 2-wire, 3-wire or 4-wire-circuit**
- **Connecting cable PVC, silicone, PTFE, metal braiding**

Push-in RTD temperature probes are mainly used for measuring temperature in liquids and gasses. The application areas, among others, are the air conditioning and refrigeration industry, in the construction of heating systems/furnaces/equipment, and in laboratory technology.
Depending on the version, the connection cables are suitable for dry or moist rooms with a temperature range between -50 to +400 °C. The connecting cable transition points are strain-relieved. An anti-kink protection is available as an option.
A Pt100 temperature sensing element according to DIN EN 60751, class b in 2-wire circuit is used as a measuring insert by default – versions with Pt500 or Pt1000 are also possible. The connection is also available in 3-wire and 4-wire circuits as an option.

Technical data

Connection	Cable ends stripped bare, with ferrules available with push-on contacts or multi-pole plug connector
Connecting cable	PVC, ambient temperature -5 to +80 °C (+105 °C) PUR, ambient temperature -5 (+5) to +105 °C Silicone, ambient temperature -50 to +180 °C PTFE, ambient temperature -50 to +260 °C Metal braiding, ambient temperature -50 to +260 °C (+350 °C / +400 °C)
Protection tube	Stainless steel 1.4571, Ø 3 mm, Ø 4 mm, Ø 5 mm, Ø 5.2 mm, Ø 6 mm, and Ø 8 mm
Measuring insert	Pt100 temperature sensing element, DIN EN 60751, class B, 2-wire circuit
Response times	In water 0.4 m/s / in air 3.0 m/s Ø 6 mm: water $t_{0.5}$ approx. 4 s, $t_{0.9}$ approx. 10 s / in air $t_{0.5}$ approx. 32 s, $t_{0.9}$ approx. 98 s Ø 8 mm: water $t_{0.5}$ approx. 7 s, $t_{0.9}$ approx. 18 s / in air $t_{0.5}$ approx. 50 s, $t_{0.9}$ approx. 140 s
Accessories	For pipe screw connections and flanges refer to data sheet 909750

JUMO GmbH & Co. KG
Delivery address: Mackenrodtstraße 14
36039 Fulda, Germany
Postal address: 36035 Fulda, Germany
Phone: +49 661 6003-0
Fax: +49 661 6003-607
E-mail: mail@jumo.net
Internet: www.jumo.net

JUMO Instrument Co. Ltd.
JUMO House
Temple Bank, Riverway
Harlow, Essex CM20 2DY, UK
Phone: +44 1279 635533
Fax: +44 1279 635262
E-mail: sales@jumo.co.uk
Internet: www.jumo.co.uk

JUMO Process Control, Inc.
6733 Myers Road
East Syracuse, NY 13057, USA
Phone: 315-437-5866
1-800-554-5866
Fax: 315-437-5860
E-mail: info.us@jumo.net
Internet: www.jumousa.com

Dimensions

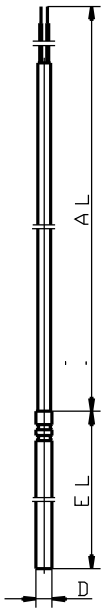

Basic type 902150/10

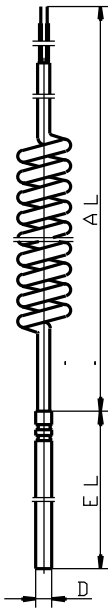

Basic type 902150/20

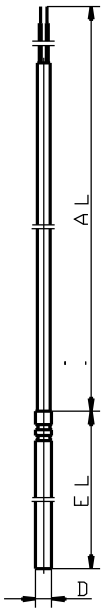

Basic type 902150/30

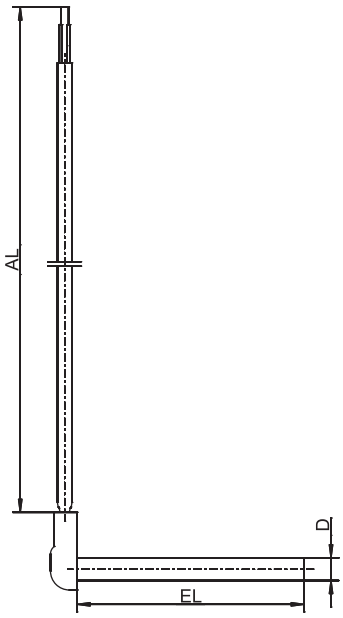

Basic type 902150/40

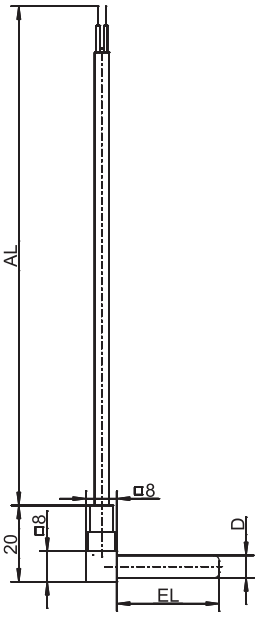

Basic type 902150/42

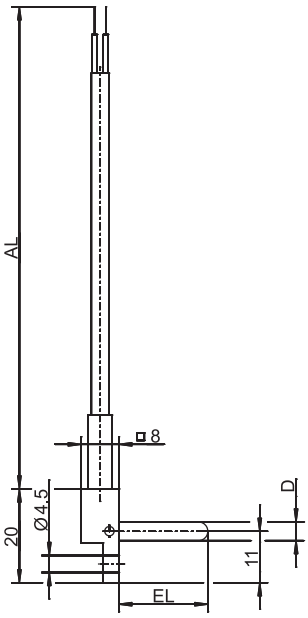

Basic type 902150/44

JUMO GmbH & Co. KG
Delivery address: Mackenrodtstraße 14
36039 Fulda, Germany
Postal address: 36035 Fulda, Germany
Phone: +49 661 6003-0
Fax: +49 661 6003-607
E-mail: mail@jumo.net
Internet: www.jumo.net

JUMO Instrument Co. Ltd.
JUMO House
Temple Bank, Riverway
Harlow, Essex CM20 2DY, UK
Phone: +44 1279 635533
Fax: +44 1279 635262
E-mail: sales@jumo.co.uk
Internet: www.jumo.co.uk

JUMO Process Control, Inc.
6733 Myers Road
East Syracuse, NY 13057, USA
Phone: 315-437-5866
1-800-554-5866
Fax: 315-437-5860
E-mail: info.us@jumo.net
Internet: www.jumousa.com

Order details: Push-in RTD temperature probe with connecting cable

			(1)	**Basic type**
		902150/10		Push-in RTD temperature probe with connecting cable, single-section protection tube made of stainless steel
		902150/20		Push-in RTD temperature probe with spiral connecting cable, single-section protection tube made of stainless steel
			(2)	**Operating temperature in °C/connecting cable**
x		378		-50 to +180 °C / silicone
x		386		-50 to +260 °C / PTFE
x		388		-50 to +260 °C / metal braiding
x		402		-50 to +400 °C / metal braiding
x		724		-5 to +80 °C / PVC
x	x	730		-5 to +105 °C / PVC or PUR
x		912		5 to +105 °C / PUR (only with 1× Pt100 in 2-wire circuit)
			(3)	**Measuring insert**
x		1001		1× Pt 100 in 3-wire-circuit
x	x	1003		1× Pt 100 in 2-wire circuit
x		1011		1× Pt 100 in 4-wire circuit
x		2001		2× Pt 100 in 3-wire-circuit
x		2003		2× Pt 100 in 2-wire circuit
			(4)	**Tolerance class according to DIN EN 60751**
x	x	1		Class B (standard)
x	x	2		Class A
			(5)	**Protection tube diameter D in mm**
x		3		Ø 3 mm (only as 1× Pt100 in 2-wire circuit with PTFE connecting cable)
x		4		Ø 4 mm (only as 1× Pt100 in 2-wire circuit with silicone, PTFE connecting cable, or metal braid)
x		5		Ø 5 mm
x		5.2		Ø 5.2 mm
x	x	6		Ø 6 mm
			(6)	**Insertion length EL in mm**
x		30		30 mm (standard with D 3 mm and D 4 mm)
x		45		45 mm (standard with D 5 mm and D 5.2 mm)
x	x	50		50 mm (not for D < 6 mm)
x		60		60 mm (not for D < 6 mm)
			(7)	**Connecting cable end**
x	x	03		Blank connection wires
x	x	11		Ferrules (standard)
x	x	13		Push-on contact 6.3
x	x	80		Multi-pole plug connector (specify type in plain text)
			(8)	**Connecting cable length AL in mm (AL 500 to 500,000 mm for basic type 902150/10)**
	x	1100		1,100 mm (effective)
x		1500		1,500 mm
x		2500		2,500 mm
x		...		Please specify in plain text (500 mm steps)
			(9)	**Extra codes**
x	x	000		Without extra code
x		315		Strain relief spring
x		316		Strain-relief spring hose
x	x	317		Shielded connecting cable
x		858		Waterproof, protection type IP65 (only for EL 60 mm with PUR or silicone connecting cable)

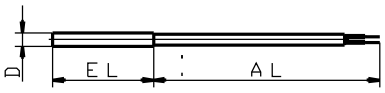

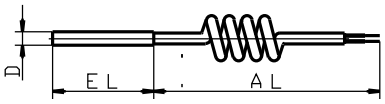

	(1)	-	(2)	-	(3)	-	(4)	-	(5)	-	(6)	-	(7)	-	(8)	/	(9)	
Order code		-		-		-		-		-		-		-		/		, ...[1]
Order example	902150/10	-	378	-	1001	-	1	-	6	-	50	-	11	-	2500	/	000	

[1] List extra codes in sequence, separated by commas.

JUMO GmbH & Co. KG
Delivery address: Mackenrodtstraße 14
36039 Fulda, Germany
Postal address: 36035 Fulda, Germany
Phone: +49 661 6003-0
Fax: +49 661 6003-607
E-mail: mail@jumo.net
Internet: www.jumo.net

JUMO Instrument Co. Ltd.
JUMO House
Temple Bank, Riverway
Harlow, Essex CM20 2DY, UK
Phone: +44 1279 635533
Fax: +44 1279 635262
E-mail: sales@jumo.co.uk
Internet: www.jumo.co.uk

JUMO Process Control, Inc.
6733 Myers Road
East Syracuse, NY 13057, USA
Phone: 315-437-5866
1-800-554-5866
Fax: 315-437-5860
E-mail: info.us@jumo.net
Internet: www.jumousa.com

Order details: Push-in RTD temperature probe with connecting cable

			(1)	**Basic type**
		902150/30		Push-in RTD temperature probe with connecting cable, multi-part protection tube (welded) made of stainless steel
		902150/40		Push-in RTD temperature probe with connecting cable, multi-part protection tube right-angled (welded) made of stainless steel
			(2)	**Operating temperature in °C / connecting cable**
x		378		-50 to +180 °C / silicone
x		386		-50 to +260 °C / PTFE
x		388		-50 to +260 °C / metal braiding
	x	397		-50 to +350 °C / metal braiding
x		402		-50 to +400 °C / metal braiding
x		724		-5 to +80 °C / PVC
x		912		5 to +105 °C / PUR (only with 1× Pt100 in 2-wire circuit)
			(3)	**Measuring insert**
x		1001		1× Pt 100 in 3-wire-circuit
x	x	1003		1× Pt 100 in 2-wire circuit
x		1011		1× Pt 100 in 4-wire circuit
x		2001		2× Pt 100 in 3-wire-circuit
x	x	2003		2× Pt 100 in 2-wire circuit
			(4)	**Tolerance class according to DIN EN 60751**
x	x	1		Class B (standard)
x	x	2		Class A
			(5)	**Protection tube diameter D in mm**
x	x	6		Ø 6 mm
x		8		Ø 8 mm
			(6)	**Insertion length EL in mm (EL 50 to 500 mm)**
x	x	50		50 mm
x	x	60		60 mm
x	x	100		100 mm
x	x	150		150 mm
x	x	200		200 mm
x	x	...		Please specify in plain text (50 mm steps)
			(7)	**Connecting cable end**
x	x	03		Blank connection wires
x	x	11		Ferrules (standard)
x	x	13		Push-on contact 6.3
x	x	80		Multi-pole connector (specify type in plain text)
			(8)	**Connecting cable length AL in mm (500 to 500,000 mm)**
x	x	2500		2,500 mm
x	x	...		Please specify in plain text (500 mm steps)
			(9)	**Extra codes**
x		000		Without extra code
x		310		Protection tube offset
x		315		Strain relief spring
x		316		Strain-relief spring hose
x	x	317		Shielded connecting cable

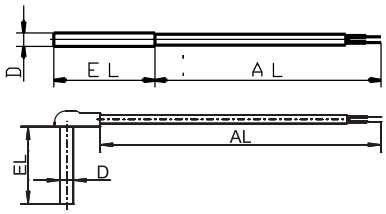

	(1)		(2)		(3)		(4)		(5)		(6)		(7)		(8)		(9)	
Order code	[ ]	-	[ ]	-	[ ]	-	[ ]	-	[ ]	-	[ ]	-	[ ]	-	[ ]	/	[ ]	, ...[1]
Order example	902150/30	-	378	-	1001	-	1	-	6	-	50	-	11	-	2500	/	000	

[1] List extra codes in sequence, separated by commas.

JUMO GmbH & Co. KG
Delivery address: Mackenrodtstraße 14
36039 Fulda, Germany
Postal address: 36035 Fulda, Germany
Phone: +49 661 6003-0
Fax: +49 661 6003-607
E-mail: mail@jumo.net
Internet: www.jumo.net

JUMO Instrument Co. Ltd.
JUMO House
Temple Bank, Riverway
Harlow, Essex CM20 2DY, UK
Phone: +44 1279 635533
Fax: +44 1279 635262
E-mail: sales@jumo.co.uk
Internet: www.jumo.co.uk

JUMO Process Control, Inc.
6733 Myers Road
East Syracuse, NY 13057, USA
Phone: 315-437-5866
1-800-554-5866
Fax: 315-437-5860
E-mail: info.us@jumo.net
Internet: www.jumousa.com

Order details: Push-in RTD temperature probe with connecting cable

			(1)	**Basic type**
		902150/42		Push-in RTD temperature probe with connecting cable, single-section protection tube right-angled made of stainless steel
		902150/44		Push-in RTD temperature probe with connecting cable and mounting borehole, single-section protection tube right-angled made of stainless steel
			(2)	**Operating temperature in °C / connecting cable**
x	x	388		-50 to +260 °C / metal braiding
			(3)	**Measuring insert**
x	x	1003		1× Pt 100 in 2-wire circuit
x		1011		1× Pt 100 in 4-wire circuit
x		2003		2× Pt 100 in 2-wire circuit
			(4)	**Tolerance class according to DIN EN 60751**
x	x	1		Class B (standard)
x	x	2		Class A
			(5)	**Protection tube diameter D in mm**
	x	4		Ø 4 mm
x		6		Ø 6 mm
			(6)	**Insertion length EL in mm**
	x	9		9 mm
	x	12		12 mm
x		20		20 mm
x		50		50 mm
			(7)	**Connecting cable end**
x	x	03		Blank connection wires
x	x	11		Ferrules (standard)
x	x	13		Push-on contact 6.3
x	x	80		Multi-pole connector (specify type in plain text)
			(8)	**Connecting cable length AL in mm (500 to 500,000 mm)**
x	x	2500		2,500 mm
x	x	...		Please specify in plain text (500 mm steps)
			(9)	**Extra codes**
x	x	000		Without extra code
x	x	315		Strain relief spring
x	x	317		Shielded connecting cable

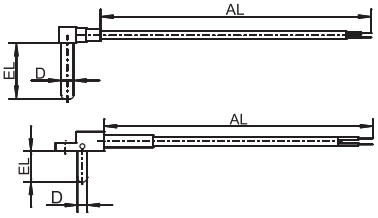

	(1)	-	(2)	-	(3)	-	(4)	-	(5)	-	(6)	-	(7)	-	(8)	/	(9)	
Order code	[ ]	-	[ ]	-	[ ]	-	[ ]	-	[ ]	-	[ ]	-	[ ]	-	[ ]	/	[ ]	, ...[1]
Order example	902150/42	-	388	-	1003	-	1	-	6	-	20	-	03	-	2500	/	000	

[1] List extra codes in sequence, separated by commas.

JUMO GmbH & Co. KG
Delivery address: Mackenrodtstraße 14
36039 Fulda, Germany
Postal address: 36035 Fulda, Germany
Phone: +49 661 6003-0
Fax: +49 661 6003-607
E-mail: mail@jumo.net
Internet: www.jumo.net

JUMO Instrument Co. Ltd.
JUMO House
Temple Bank, Riverway
Harlow, Essex CM20 2DY, UK
Phone: +44 1279 635533
Fax: +44 1279 635262
E-mail: sales@jumo.co.uk
Internet: www.jumo.co.uk

JUMO Process Control, Inc.
6733 Myers Road
East Syracuse, NY 13057, USA
Phone: 315-437-5866
1-800-554-5866
Fax: 315-437-5860
E-mail: info.us@jumo.net
Internet: www.jumousa.com

Stock versions

(1)		(2)		(3)		(4)		(5)		(6)		(7)		(8)		(9)	Part no.
902150/10	-	378	-	1003	-	1	-	5.2	-	45	-	11	-	2500	/	000	00326037
902150/10	-	378	-	1003	-	1	-	6	-	50	-	11	-	2500	/	000	00389771
902150/10	-	378	-	1003	-	1	-	6	-	50	-	11	-	1500	/	000	00085313
902150/10	-	378	-	1001	-	1	-	6	-	50	-	11	-	2500	/	000	00392513
902150/10	-	378	-	1003	-	1	-	6	-	60	-	11	-	2500	/	858	00492541
902150/10	-	402	-	1003	-	1	-	6	-	50	-	11	-	1500	/	317	00085311
902150/10	-	724	-	1003	-	1	-	6	-	50	-	11	-	2500	/	000	00059085
902150/10	-	724	-	1003	-	1	-	6	-	50	-	11	-	1500	/	000	00085315
902150/10	-	730	-	1003	-	1	-	6	-	50	-	11	-	1500	/	000	00085316
902150/10	-	730	-	1003	-	1	-	6	-	60	-	11	-	2500	/	858	00492539
902150/20	-	730	-	1003	-	1	-	6	-	50	-	11	-	1100	/	000	00065495
902150/30	-	388	-	1003	-	1	-	6	-	50	-	11	-	2500	/	315.317	00055718
902150/30	-	388	-	1003	-	1	-	6	-	100	-	11	-	2500	/	315.317	00055719
902150/30	-	388	-	1001	-	1	-	6	-	50	-	11	-	2500	/	315.317	00065451
902150/30	-	388	-	1001	-	1	-	6	-	100	-	11	-	2500	/	315.317	00065453
902150/30	-	402	-	1001	-	1	-	6	-	150	-	11	-	2500	/	315.317	00549701
902150/40	-	397	-	1003	-	1	-	6	-	60	-	11	-	2500	/	317	00055715

JUMO GmbH & Co. KG
Delivery address: Mackenrodtstraße 14
36039 Fulda, Germany
Postal address: 36035 Fulda, Germany
Phone: +49 661 6003-0
Fax: +49 661 6003-607
E-mail: mail@jumo.net
Internet: www.jumo.net

JUMO Instrument Co. Ltd.
JUMO House
Temple Bank, Riverway
Harlow, Essex CM20 2DY, UK
Phone: +44 1279 635533
Fax: +44 1279 635262
E-mail: sales@jumo.co.uk
Internet: www.jumo.co.uk

JUMO Process Control, Inc.
6733 Myers Road
East Syracuse, NY 13057, USA
Phone: 315-437-5866
1-800-554-5866
Fax: 315-437-5860
E-mail: info.us@jumo.net
Internet: www.jumousa.com

Push-in RTD temperature probe with connection cable for the solar heating system

- **temperature range from -50 to +260 °C**
- **for collector and accumulator temperature measurement**
- **long-term stability**
- **cost-effective design for solar heating systems**
- **connection cable made of PVC, PUR, silicone or PTFE**

The push-in RTD temperature probes have been developed based on the requirement of temperature measurement in solar thermal systems to be used in collectors and accumulators. Particular emphasis must be placed on the excellent features such as sealing, temperature and long-term stability, which are basic prerequisites to ensure reliable system operation even after many years. A design specifically adapted to the market requirements allows a cost-effective production.

A Pt1000 temperature probe is used in almost all solar thermal systems to minimize the influence of the lead resistance due to the 2-wire circuit technology. Different nominal values of the platinum temperature probe or different temperature probes are optionally available.

Technical Data

Connection	Stripped wire ends, tin-plated connection wires, with ferrules or contacts 6.3 mm flat available
Cable	PVC, ambient temperature -5 to +105 °C PUR, ambient temperature -5 to +105 °C Silicone, ambient temperature -50 to +180 °C PTFE, ambient temperature -190 to +260 °C
Sheath	Stainless steel or brass
Measuring insert	Pt1000 temperature probe, DIN EN 60751, cl. B, 2-wire circuit different nominal values or temperature probes on request
Response times	$t_{0.5}$ = 4 s and $t_{0.9}$ = 10 s with Ø 5 mm $t_{0.5}$ = 6 s and $t_{0.9}$ = 14 s with Ø 6 mm in water 0.4 m/s
Accessories	Sheath, Data Sheet 909710 and 902440

JUMO GmbH & Co. KG
Delivery address: Mackenrodtstraße 14
36039 Fulda, Germany
Postal address: 36035 Fulda, Germany
Phone: +49 661 6003-0
Fax: +49 661 6003-607
E-mail: mail@jumo.net
Internet: www.jumo.net

JUMO Instrument Co. Ltd.
JUMO House
Temple Bank, Riverway
Harlow, Essex CM20 2DY, UK
Phone: +44 1279 635533
Fax: +44 1279 635262
E-mail: sales@jumo.co.uk
Internet: www.jumo.co.uk

JUMO Process Control, Inc.
6733 Myers Road
East Syracuse, NY 13057, USA
Phone: 315-437-5866
1-800-554-5866
Fax: 315-437-5860
E-mail: info.us@jumo.net
Internet: www.jumousa.com

Dimensions

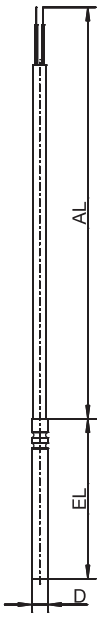

Basic type 902153/10
Basic type 902153/15

JUMO GmbH & Co. KG
Delivery address: Mackenrodtstraße 14
36039 Fulda, Germany
Postal address: 36035 Fulda, Germany
Phone: +49 661 6003-0
Fax: +49 661 6003-607
E-mail: mail@jumo.net
Internet: www.jumo.net

JUMO Instrument Co. Ltd.
JUMO House
Temple Bank, Riverway
Harlow, Essex CM20 2DY, UK
Phone: +44 1279 635533
Fax: +44 1279 635262
E-mail: sales@jumo.co.uk
Internet: www.jumo.co.uk

JUMO Process Control, Inc.
6733 Myers Road
East Syracuse, NY 13057, USA
Phone: 315-437-5866
1-800-554-5866
Fax: 315-437-5860
E-mail: info.us@jumo.net
Internet: www.jumousa.com

Order details: Push-in RTD temperature probe with connection cable for the solar heating system

(1) Basic type

902153/10 — Push-in RTD temperature probe with connection cable for the solar heating system, single-section sheath made of **stainless steel**

902153/15 — Push-in RTD temperature probe with connection cable for the solar heating system, single-section sheath made of **brass**

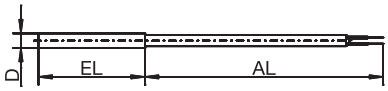

			(2) Operating temperature range in °C / cable type
x	x	378	-50 to +180 °C (short-term +250 °C) / Silicone
x		386	-50 to +260 °C (short-term +300 °C) / PTFE
x	x	730	-5 to +105 °C / PVC
x	x	731	-5 to +105 °C / PUR
			(3) Measuring insert
x	x	1003	1× Pt 100 in 2-wire circuit
x	x	1005	1× Pt 1000 in 2-wire circuit (standard)
			(4) Tolerance class according to DIN EN 60751
x	x	1	Class B (standard)
			(5) Sheath diameter D in mm
x		5	Ø 5 mm
x		5.2	Ø 5.2 mm
x	x	6	Ø 6 mm (standard)
			(6) Fitting length EL in mm
x	x	25	25 mm (only with sheath diameter 6 mm)
x		36	36 mm (only with sheath diameter 5 mm)
x		45	45 mm (standard with sheath diameter 5 mm and 5.2 mm)
x	x	50	50 mm (standard with sheath diameter 6 mm)
x		60	60 mm (only with sheath diameter 6 mm)
			(7) Cable termination
x	x	04	Tin-plated wires
x	x	11	Ferrules according to DIN 46228 Part 4 (standard)
x	x	13	Contact 6.3 mm according to DIN 46247
			(8) Cable length AL in mm (500 to 20000)
x	x	1500	1500 mm (standard with silicone connection cable)
x	x	2500	2500 mm (standard with PUR-/PVC connection cable)
x	x	. . .	Please specify in plain text (500 mm steps)
			(9) Extra codes
x	x	000	None

	(1)	-	(2)	-	(3)	-	(4)	-	(5)	-	(6)	-	(7)	-	(8)	/	(9)
Order code		-		-		-		-		-		-		-		/	
Order example	902153/10	-	731	-	1005	-	1	-	6	-	50	-	11	-	2500	/	000

Stock versions

(1)		(2)		(3)		(4)		(5)		(6)		(7)		(8)		(9)	Part no.
902153/10	-	378	-	1005	-	1	-	6	-	50	-	11	-	1500	/	000	00376393
902153/10	-	378	-	1005	-	1	-	6	-	50	-	11	-	2500	/	000	00390058
902153/10	-	378	-	1005	-	1	-	6	-	50	-	11	-	3000	/	000	00376392
902153/10	-	731	-	1005	-	1	-	6	-	50	-	11	-	4000	/	000	00408767
902153/15	-	378	-	1005	-	1	-	6	-	25	-	11	-	1500	/	000	00534256
902153/15	-	378	-	1005	-	1	-	6	-	25	-	11	-	5000	/	000	00520324
902153/15	-	731	-	1005	-	1	-	6	-	25	-	11	-	2000	/	000	00534258

Note:
Minimum order quantities are specified for this data sheet:
Version with connection cable length AL ≤ 3000 mm: min. 100
and connection cable length AL > 3000 mm: min. 50.
Variations according to data sheet are **only** available in the minimum order quantity specified.
For minimum quantities and similar basic types please refer to data and price sheet 902150.

JUMO GmbH & Co. KG
Delivery address: Mackenrodtstraße 14, 36039 Fulda, Germany
Postal address: 36035 Fulda, Germany
Phone: +49 661 6003-0
Fax: +49 661 6003-607
E-mail: mail@jumo.net
Internet: www.jumo.net

JUMO Instrument Co. Ltd.
JUMO House
Temple Bank, Riverway
Harlow - Essex CM20 2DY, UK
Phone: +44 1279 63 55 33
Fax: +44 1279 63 52 62
E-mail: sales@jumo.co.uk
Internet: www.jumo.co.uk

JUMO Process Control, Inc.
8 Technology Boulevard
Canastota, NY 13032, USA
Phone: 315-697-JUMO
1-800-554-JUMO
Fax: 315-697-5867
E-mail: info@jumo.us
Internet: www.jumo.us

Push-in RTD temperature probes with bayonet lock

- **for temperatures from -50 to +350°C**
- **with sheaths in different materials**
- **as single or twin RTD temperature probe**
- **good heat transfer through adjustable spring pressure**
- **insertion and removal without tools**

Push-in RTD temperature probes with bayonet lock are preferred for measuring temperatures in solids, on bearings and moulding tools, for example in the plastics industry. Thanks to the special shape of the measuring tip, these temperature probes are suitable for use in flat-bottom and cone-shaped bores.

The rugged pressure spring is made from rust and acid resistant stainless steel, Mat. Ref. 1.4310, which also acts as a cable protector and ensures a uniform pressure between the measuring tip and the bottom of the hole. The fitting length can be altered by rotating the bayonet lock. Bayonet locks are available in the diameters 12, 15 and 16mm.

The sensor is normally a Pt100 temperature sensor to EN 60 751, Class B in 2-wire circuit, but versions with Pt500 or Pt1000 are also available. 3-wire and 4-wire connections can be provided.

Technical data

Connection	cable ends available as: bare wires, with ferrules, receptacle or multipole connector
Connecting cable	silicone, ambient temperature -50 to +180°C PTFE, ambient temperature -190 to +260°C metal braiding, ambient temperature -50 to +350°C connecting cable available with shielding (option)
Process connection	bayonet lock, nickel-plated brass, 12mm, 15mm or 16mm dia.
Sheath	stainless steel 1.4571, 6mm and 8mm dia.
Measuring insert	Pt100 temperature sensor, EN 60 751, Cl. B, 2-wire circuit
Accessories	bayonet sockets, Data Sheet 90.9725

JUMO GmbH & Co. KG
Delivery address: Mackenrodtstraße 14,
36039 Fulda, Germany
Postal address: 36035 Fulda, Germany
Phone: +49 661 6003-0
Fax: +49 661 6003-607
E-mail: mail@jumo.net
Internet: www.jumo.net

JUMO Instrument Co. Ltd.
JUMO House
Temple Bank, Riverway
Harlow - Essex CM20 2DY, UK
Phone: +44 1279 63 55 33
Fax: +44 1279 63 52 62
E-mail: sales@jumo.co.uk
Internet: www.jumo.co.uk

JUMO Process Control, Inc.
8 Technology Boulevard
Canastota, NY 13032, USA
Phone: 315-697-JUMO
1-800-554-JUMO
Fax: 315-697-5867
E-mail: info@jumo.us
Internet: www.jumo.us

Dimensions

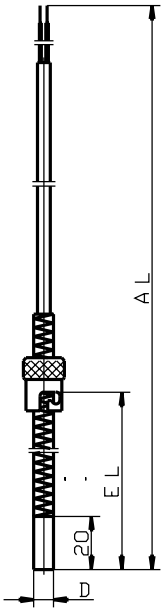

Type 902190/10

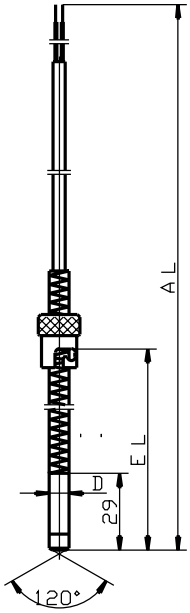

Type 902190/20

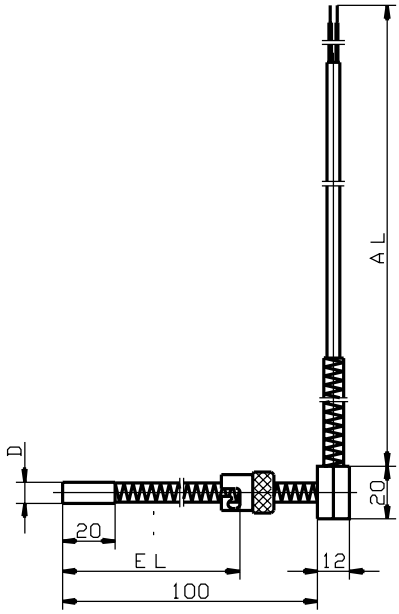

Type 902190/30

JUMO GmbH & Co. KG
Delivery address: Mackenrodtstraße 14, 36039 Fulda, Germany
Postal address: 36035 Fulda, Germany
Phone: +49 661 6003-0
Fax: +49 661 6003-607
E-mail: mail@jumo.net
Internet: www.jumo.net

JUMO Instrument Co. Ltd.
JUMO House
Temple Bank, Riverway
Harlow - Essex CM20 2DY, UK
Phone: +44 1279 63 55 33
Fax: +44 1279 63 52 62
E-mail: sales@jumo.co.uk
Internet: www.jumo.co.uk

JUMO Process Control, Inc.
8 Technology Boulevard
Canastota, NY 13032, USA
Phone: 315-697-JUMO
1-800-554-JUMO
Fax: 315-697-5867
E-mail: info@jumo.us
Internet: www.jumo.us

Order details: Push-in RTD temperature probes with bayonet lock

				(1) Basic version
			902190/10	Push-in RTD temperature probe, sheath / measuring tip (flat-bottom) in stainless steel, Mat. Ref. 1.4571; bayonet lock: 12mm dia.
			902190/20	Push-in RTD temperature probe, sheath in stainless steel, Mat. Ref. 1.4571, measuring tip (120°) ceramic, KER 221; bayonet lock: 12mm dia.
			902190/30	Push-in RTD temperature probe, sheath / measuring tip (flat-bottom) in stainless steel, Mat. Ref. 1.4571; bayonet lock: 12mm dia.
				(2) Operating temperature in °C / connecting cable
x	x	x	380	-50 to +200°C/silicone
x	x	x	386	-50 to +260°C/PTFE
x	x	x	388	-50 to +260°C/metal braiding
x	x	x	397	-50 to +350°C/metal braiding
				(3) Measuring insert
x	x	x	1001	1 x Pt100 in 3-wire circuit
x	x	x	1003	1 x Pt100 in 2-wire circuit
x	x	x	2003	2 x Pt100 in 2-wire circuit
				(4) Tolerance class to EN 60 751
x	x	x	1	Class B (standard)
x	x	x	2	Class A
				(5) Sheath diameter D in mm
x	x		6	6mm
x		x	8	8mm
				(6) Fitting length EL in mm
		x	85	20 - 85mm
x			175	20 - 175mm
	x		185	29 - 185mm
				(7) Connecting cable end
x	x	x	03	bare cable ends
x	x	x	11	ferrules to DIN 46 228 Part 4 (standard)
x	x	x	13	receptacle 6.3 to DIN 46 247
x	x	x	80	multipole connector (please specify type in plain text)
				(8) Connecting cable length AL in mm (500≤ AL ≤500000)
x	x	x	2500	2500mm
x	x	x	...	please specify in plain text (500mm steps)
				(9) Extra codes
x	x	x	000	no extra code
x	x	x	302	bayonet lock 15mm dia.
x	x	x	303	bayonet lock 16mm dia.
x	x	x	317	shielded connecting cable

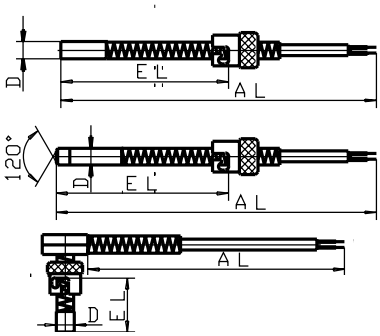

	(1)		(2)		(3)		(4)		(5)		(6)		(7)		(8)		(9)	
Order code	[ ]	-	[ ]	-	[ ]	-	[ ]	-	[ ]	-	[ ]	-	[ ]	-	[ ]	/	[ ]	,...
Order example	902190/10	-	397	-	1003	-	1	-	8	-	175	-	11	-	2500	/	000[1]	

Note: Bayonet sockets, Data Sheet 90.9725

Stock versions

(1)		(2)		(3)		(4)		(5)		(6)		(7)		(8)		(9)	Sales No.
902190/10	-	397	-	1003	-	1	-	8	-	175	-	11	-	2500	/	317	90/00055797
902190/10	-	388	-	1003	-	1	-	6	-	175	-	11	-	2500	/	317	90/00055798
902190/20	-	388	-	1003	-	1	-	6	-	185	-	13	-	2500	/	317	90/00055808

[1] List extra codes in sequence, separated by commas.

JUMO GmbH & Co. KG
Delivery address: Mackenrodtstraße 14
36039 Fulda, Germany
Postal address: 36035 Fulda, Germany
Phone: +49 661 6003-0
Fax: +49 661 6003-607
Email: mail@jumo.net
Internet: www.jumo.net

JUMO Instrument Co. Ltd.
JUMO House
Temple Bank, Riverway
Harlow, Essex CM 20 2DY, UK
Phone: +44 1279 63 55 33
Fax: +44 1279 62 50 29
Email: sales@jumo.co.uk
Internet: www.jumo.co.uk

JUMO Process Control, Inc.
6733 Myers Road
East Syracuse, NY 13057, USA
Phone: +1 315 437 5866
Fax: +1 315 437 5860
Email: info.us@jumo.net
Internet: www.jumousa.com

Mineral-Insulated RTD Temperature Probe According to DIN EN 60751

- **For temperatures from -50 (-200) to +600 °C**
- **Flexible sheath cable with vibration-resistant measuring insert**
- **As single or double RTD temperature probe in two-wire, three-wire, or four-wire circuit**
- **Quick response time**
- **Application-specific insertion length**

Due to their specific features, mineral-insulated RTD temperature probes are used in chemical plants, power plants, pipelines, engine building, test rigs, and any measuring locations requiring flexibility and simple replacement. Inside the flexible and thin-walled stainless steel sheath cable, the low ohmic conductor copper wires are embedded in compressed, heat-resistant magnesium oxide.

The temperature sensor with 2-wire, 3-wire, or 4-wire technology is connected to the conductor copper wires and installed in the stainless steel protection tube. The protection tube and sheath cable are welded to one another. They are available in diameters as low as 1.9 mm.

The good thermal transfer between the protection tube and temperature sensor enables short response times ($t_{0.5}$ from 0.7 s) and excellent measuring accuracy. The vibration-resistant construction guarantees a long operating life. The flexible probe tube allows temperatures to be measured at difficult-to-access points. The smallest bending radius is 5 times the outer diameter. From an insertion length of approximately 1000 mm, the mineral-insulated RTD temperature probes are delivered in a rolled up state.

The measuring insert is normally fitted with a Pt100 temperature sensor according to DIN EN 60751, class B in 2-wire circuit; versions with Pt500 or Pt1000 can be ordered as well. The connection is also available in 3-wire and 4-wire circuits and in tolerance classes A and AA.

Technical data

Terminal head	Form B, die-cast aluminum, M20 × 1.5; IP65, ambient temperature -40 to +100 °C Form BUZ, die-cast aluminum, M20 × 1,5; IP65, ambient temperature -40 to +100 °C Form J, die-cast aluminum, M16 × 1.5; IP65, ambient temperature -40 to +100 °C Caution: reduced ambient temperature when using transmitters
Connection	Cable ends stripped bare; alternatively available with ferrules, plug-in sleeves, or multi-pole plug connectors
Connecting cable	PVC, ambient temperature -5 to +80 °C (+105 °C) Silicone, ambient temperature -50 to +180 °C PTFE, ambient temperature -190 to +260 °C Metal braiding, ambient temperature -50 to +260 °C (+350 °C)
Process connection	Thread, stainless steel 1.4571
Protection tube	Stainless steel 1.4571, Ø 1.9 mm, Ø 3 mm, and Ø 6 mm
Adapter sleeve (end closure)	As standard, the adapter sleeve (end closure) is designed up to 120 °C; it is available up to 300 °C upon request.
Measuring insert	Pt100/Pt500/Pt1000 temperature sensor, DIN EN 60751, class B, A, AA in 2-wire, 3-wire, or 4-wire circuit
Response times	In water with 0.4 m/s / in air with 3 m/s Ø 1.9 mm: water $t_{0.5}$ = 0.7 s, $t_{0.9}$ = 2.1 s/air $t_{0.5}$ = 7.2 s, $t_{0.9}$ = 20.5 s Ø 3.0 mm: water $t_{0.5}$ = 1.3 s, $t_{0.9}$ = 4.0 s/air $t_{0.5}$ = 13.5 s, $t_{0.9}$ = 41.0 s Ø 6.0 mm: water $t_{0.5}$ = 5.0 s, $t_{0.9}$ = 11.5 s/air $t_{0.5}$ = 37.5 s, $t_{0.9}$ = 117.5 s
Transmitters	Analog transmitter, output 4 to 20 mA, data sheet 707030 Programmable transmitter, output 4 to 20 mA/20 to 4 mA, data sheet 707010 Programmable transmitter, output 4 to 20 mA/20 to 4 mA and HART® interface, data sheet 707010 Programmable transmitter, output 4 to 20 mA/20 to 4 mA (USB), data sheet 707050

JUMO GmbH & Co. KG
Delivery address: Mackenrodtstraße 14
36039 Fulda, Germany
Postal address: 36035 Fulda, Germany
Phone: +49 661 6003-0
Fax: +49 661 6003-607
Email: mail@jumo.net
Internet: www.jumo.net

JUMO Instrument Co. Ltd.
JUMO House
Temple Bank, Riverway
Harlow, Essex CM 20 2DY, UK
Phone: +44 1279 63 55 33
Fax: +44 1279 62 50 29
Email: sales@jumo.co.uk
Internet: www.jumo.co.uk

JUMO Process Control, Inc.
6733 Myers Road
East Syracuse, NY 13057, USA
Phone: +1 315 437 5866
Fax: +1 315 437 5860
Email: info.us@jumo.net
Internet: www.jumousa.com

Dimensions

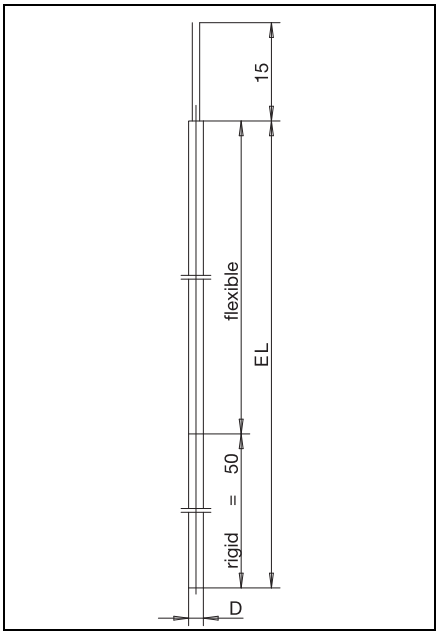

Basic type 902210/10

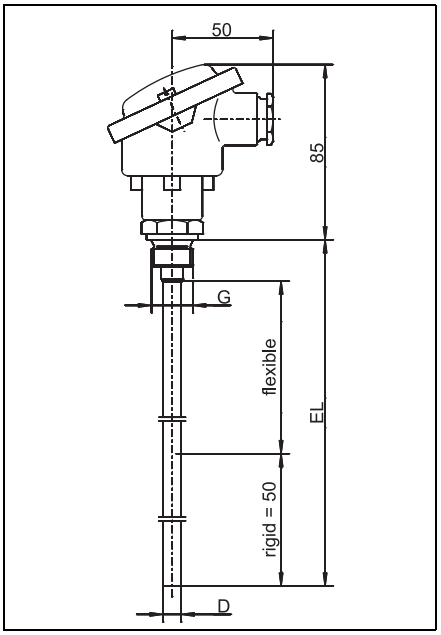

Basic type 902220/40

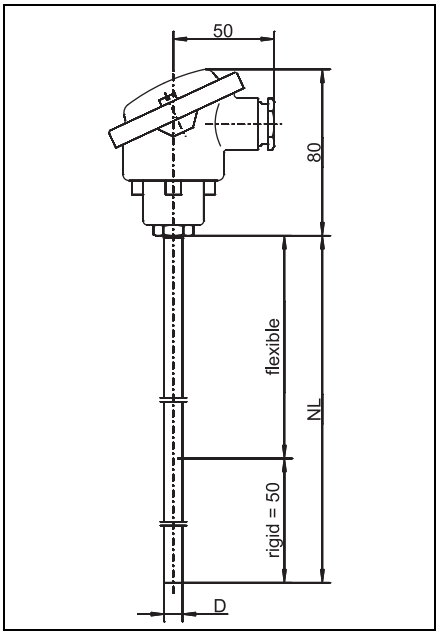

Basic type 902220/41

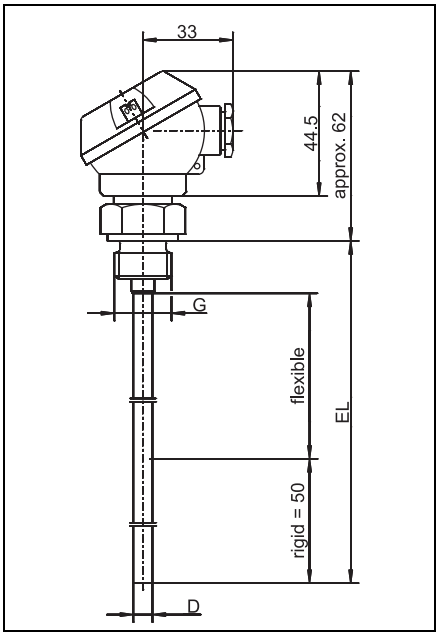

Basic type 902230/40

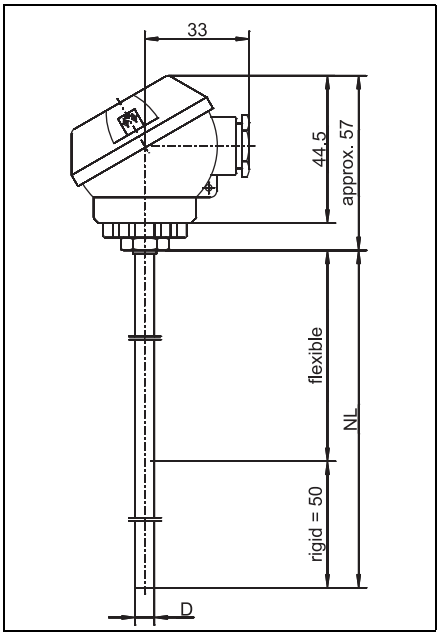

Basic type 902230/41

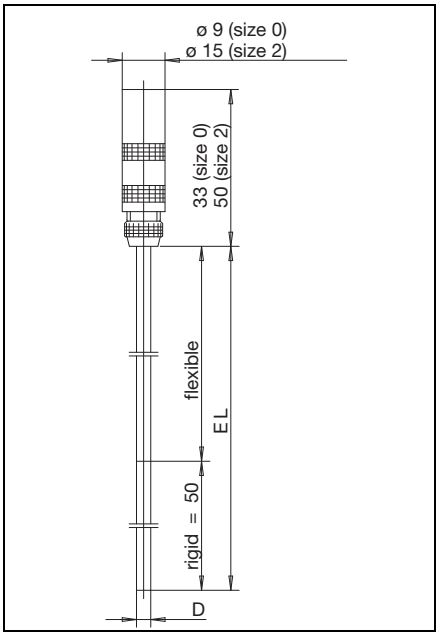

Basic type 902240/20

JUMO GmbH & Co. KG
Delivery address: Mackenrodtstraße 14
36039 Fulda, Germany
Postal address: 36035 Fulda, Germany
Phone: +49 661 6003-0
Fax: +49 661 6003-607
Email: mail@jumo.net
Internet: www.jumo.net

JUMO Instrument Co. Ltd.
JUMO House
Temple Bank, Riverway
Harlow, Essex CM 20 2DY, UK
Phone: +44 1279 63 55 33
Fax: +44 1279 62 50 29
Email: sales@jumo.co.uk
Internet: www.jumo.co.uk

JUMO Process Control, Inc.
6733 Myers Road
East Syracuse, NY 13057, USA
Phone: +1 315 437 5866
Fax: +1 315 437 5860
Email: info.us@jumo.net
Internet: www.jumousa.com

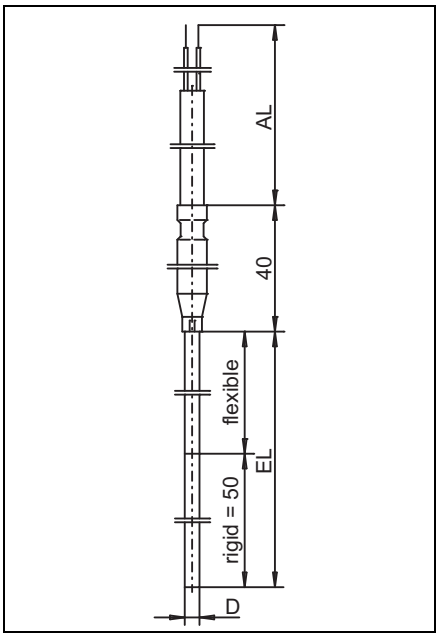

Basic type 902250/3x

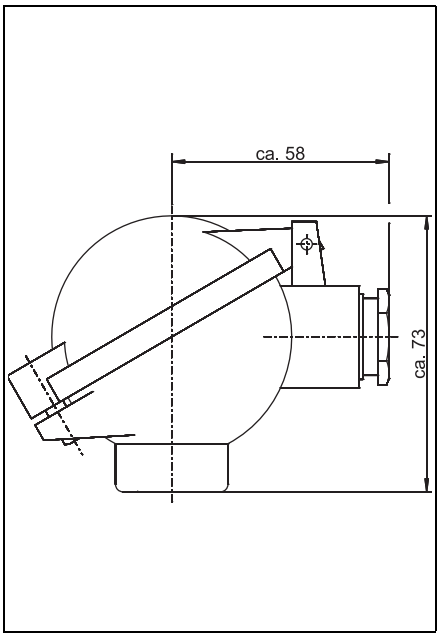

Terminal head form BUZ
Extra code 320

JUMO GmbH & Co. KG
Delivery address: Mackenrodtstraße 14
36039 Fulda, Germany
Postal address: 36035 Fulda, Germany
Phone: +49 661 6003-0
Fax: +49 661 6003-607
Email: mail@jumo.net
Internet: www.jumo.net

JUMO Instrument Co. Ltd.
JUMO House
Temple Bank, Riverway
Harlow, Essex CM 20 2DY, UK
Phone: +44 1279 63 55 33
Fax: +44 1279 62 50 29
Email: sales@jumo.co.uk
Internet: www.jumo.co.uk

JUMO Process Control, Inc.
6733 Myers Road
East Syracuse, NY 13057, USA
Phone: +1 315 437 5866
Fax: +1 315 437 5860
Email: info.us@jumo.net
Internet: www.jumousa.com

Order details

			(1)	**Basic type**
		902210/10		Mineral-insulated RTD temperature probe with bare connection wires
		902240/20		Mineral-insulated RTD temperature probe with LEMO-coupling
			(2)	**Operating temperature in °C**
x	x	150		-200 to +600 °C
x	x	415		-50 to +600 °C (standard)
			(3)	**Measuring insert**
x	x	1001		1× Pt100 in 3-wire circuit
x	x	1003		1× Pt100 in 2-wire circuit
x	x	1005		1× Pt1000 in 2-wire circuit (only for operating temperature -50 to +600 °C)
x	x	1006		1× Pt1000 in 3-wire circuit (only for operating temperature -50 to +600 °C)
x	x	1011		1× Pt100 in 4-wire circuit
x		2001		2× Pt100 in 3-wire circuit (only in combination with protection tube diameter 3 and 6 mm)
x	x	2003		2× Pt100 in 2-wire circuit (only in combination with protection tube diameter 3 and 6 mm)
			(4)	**Tolerance class according to DIN EN 60751**
x	x	1		Class B (standard)
x	x	2		Class A
x	x	3		Class AA
			(5)	**Protection tube diameter D in mm**
x	x	1.9		Ø 1.9 mm, for basic type 902240/20 incl. LEMO-coupling size 0 (sheath cable Ø 1.5 mm)
x	x	3		Ø 3.0 mm, for basic type 902240/20 incl. LEMO-coupling size 0
x	x	6		Ø 6.0 mm, for basic type 902240/20 incl. LEMO-coupling size 2
			(6)	**Insertion length EL in mm (at least 70 mm)**
x	x	...		Specification in plain text
			(7)	**Extra codes**
x	x	000		None
x	x	058		SIL and PL compatible

Further versions can be purchased upon request.

	(1)		(2)		(3)		(4)		(5)		(6)		(7)
Order code		-		-		-		-		-		/	
Order example	902240/20	-	415	-	1001	-	1	-	6	-	200	/	000

JUMO GmbH & Co. KG
Delivery address: Mackenrodtstraße 14
36039 Fulda, Germany
Postal address: 36035 Fulda, Germany
Phone: +49 661 6003-0
Fax: +49 661 6003-607
Email: mail@jumo.net
Internet: www.jumo.net

JUMO Instrument Co. Ltd.
JUMO House
Temple Bank, Riverway
Harlow, Essex CM 20 2DY, UK
Phone: +44 1279 63 55 33
Fax: +44 1279 62 50 29
Email: sales@jumo.co.uk
Internet: www.jumo.co.uk

JUMO Process Control, Inc.
6733 Myers Road
East Syracuse, NY 13057, USA
Phone: +1 315 437 5866
Fax: +1 315 437 5860
Email: info.us@jumo.net
Internet: www.jumousa.com

Accessories

Designation	Part no.
Stainless steel compression fitting M8 × 1, stainless steel clamping ring for protection tube diameter D = 3 mm	00080810
Stainless steel compression fitting M8 × 1, PTFE clamping ring for protection tube diameter D = 3 mm	00049709
Stainless steel compression fitting M10 × 1, stainless steel clamping ring for protection tube diameter D = 6 mm	00065416
Stainless steel compression fitting G 1/4, stainless steel clamping ring for protection tube diameter D = 6 mm	00080811
Steel compression fitting G 3/8, steel clamping ring for protection tube diameter D = 6 mm	00057945
Stainless steel compression fitting G 3/8, stainless steel clamping ring for protection tube diameter D = 6 mm	00317966
Stainless steel compression fitting G 1/2, stainless steel clamping ring for protection tube diameter D = 6 mm	00305445
Stainless steel compression fitting 1/2-14NPT, stainless steel clamping ring for protection tube diameter D = 6 mm	00444210

JUMO GmbH & Co. KG
Delivery address: Mackenrodtstraße 14
36039 Fulda, Germany
Postal address: 36035 Fulda, Germany
Phone: +49 661 6003-0
Fax: +49 661 6003-607
Email: mail@jumo.net
Internet: www.jumo.net

JUMO Instrument Co. Ltd.
JUMO House
Temple Bank, Riverway
Harlow, Essex CM 20 2DY, UK
Phone: +44 1279 63 55 33
Fax: +44 1279 62 50 29
Email: sales@jumo.co.uk
Internet: www.jumo.co.uk

JUMO Process Control, Inc.
6733 Myers Road
East Syracuse, NY 13057, USA
Phone: +1 315 437 5866
Fax: +1 315 437 5860
Email: info.us@jumo.net
Internet: www.jumousa.com

			(1)	**Basic type**
		902220/40		Screw-in mineral-insulated RTD temperature probe with form B terminal head
		902220/41		Push-in mineral-insulated RTD temperature probe with form B terminal head
			(2)	**Operating temperature in °C**
x	x	150		-200 to +600 °C
x	x	415		-50 to +600 °C (standard)
			(3)	**Measuring insert**
x	x	1001		1× Pt100 in 3-wire circuit
x	x	1003		1× Pt100 in 2-wire circuit (standard for transmitters extra code 330 and 333)
x	x	1011		1× Pt100 in 4-wire circuit (standard for transmitters extra code 331 and 336)
x	x	2001		2× Pt100 in 3-wire circuit
x	x	2003		2× Pt100 in 2-wire circuit
			(4)	**Tolerance class according to DIN EN 60751**
x	x	1		Class B (standard)
x	x	2		Class A
x	x	3		Class AA
			(5)	**Protection tube diameter D in mm**
x	x	3		Ø 3 mm
x	x	6		Ø 6 mm
			(6)	**Insertion length EL/NL in mm (at least 100 mm)**
x	x	...		Specification in plain text
			(7)	**Process connection**
	x	000		None
x		102		Screw connection G 1/4
x		103		Screw connection G 3/8
x		104		Screw connection G 1/2
			(8)	**Extra codes**
x	x	000		None
x	x	058		SIL and PL compatible
x	x	320		Terminal head form BUZ
x	x	330		1× analog transmitter, 4 to 20 mA output, data sheet 707030
x	x	331		1× programmable transmitter, 4 to 20 mA/20 to 4 mA output, data sheet 707010
x	x	333		1× analog transmitter, 0 to 10 V output, data sheet 707030
x	x	336		1× programmable transmitter, 4 to 20 mA/20 to 4 mA output and HART®-interface, data sheet 707010
x	x	550		1× programmable transmitter, 4 to 20 mA/20 to 4 mA output (USB), data sheet 707050

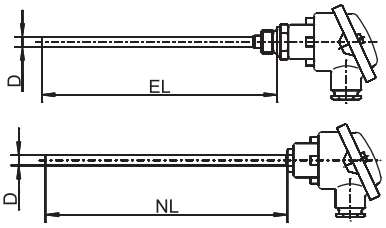

Further versions can be purchased upon request.

	(1)		(2)		(3)		(4)		(5)		(6)		(7)		(8)	
Order code	[ ]	-	[ ]	-	[ ]	-	[ ]	-	[ ]	-	[ ]	-	[ ]	/	[ ]	, ...[a]
Order example	902220/40	-	415	-	1003	-	1	-	3	-	100	-	104	/	000	

[a] List extra codes in sequence and separate using commas.

JUMO GmbH & Co. KG
Delivery address: Mackenrodtstraße 14
36039 Fulda, Germany
Postal address: 36035 Fulda, Germany
Phone: +49 661 6003-0
Fax: +49 661 6003-607
Email: mail@jumo.net
Internet: www.jumo.net

JUMO Instrument Co. Ltd.
JUMO House
Temple Bank, Riverway
Harlow, Essex CM 20 2DY, UK
Phone: +44 1279 63 55 33
Fax: +44 1279 62 50 29
Email: sales@jumo.co.uk
Internet: www.jumo.co.uk

JUMO Process Control, Inc.
6733 Myers Road
East Syracuse, NY 13057, USA
Phone: +1 315 437 5866
Fax: +1 315 437 5860
Email: info.us@jumo.net
Internet: www.jumousa.com

Accessories

Designation	Part no.
Stainless steel compression fitting M8 × 1, stainless steel clamping ring for protection tube diameter D = 3 mm	00080810
Stainless steel compression fitting M8 × 1, PTFE clamping ring for protection tube diameter D = 3 mm	00049709
Stainless steel compression fitting M10 × 1, stainless steel clamping ring for protection tube diameter D = 6 mm	00065416
Stainless steel compression fitting G 1/4, stainless steel clamping ring for protection tube diameter D = 6 mm	00080811
Steel compression fitting G 3/8, steel clamping ring for protection tube diameter D = 6 mm	00057945
Stainless steel compression fitting G 3/8, stainless steel clamping ring for protection tube diameter D = 6 mm	00317966
Stainless steel compression fitting G 1/2, stainless steel clamping ring for protection tube diameter D = 6 mm	00305445
Stainless steel compression fitting 1/2-14NPT, stainless steel clamping ring for protection tube diameter D = 6 mm	00444210
Steel sheet flange for protection tube diameter D = 6 mm	00065062
USB cable, A connector to Mini-B connector, length 3 m	00506252
PC interface with USB/TTL converter	00456352
Setup program dTRANS T01 (707010)	00378733
Setup program dTRANS T05 (707050/51)	00574959

JUMO GmbH & Co. KG
Delivery address: Mackenrodtstraße 14
36039 Fulda, Germany
Postal address: 36035 Fulda, Germany
Phone: +49 661 6003-0
Fax: +49 661 6003-607
Email: mail@jumo.net
Internet: www.jumo.net

JUMO Instrument Co. Ltd.
JUMO House
Temple Bank, Riverway
Harlow, Essex CM 20 2DY, UK
Phone: +44 1279 63 55 33
Fax: +44 1279 62 50 29
Email: sales@jumo.co.uk
Internet: www.jumo.co.uk

JUMO Process Control, Inc.
6733 Myers Road
East Syracuse, NY 13057, USA
Phone: +1 315 437 5866
Fax: +1 315 437 5860
Email: info.us@jumo.net
Internet: www.jumousa.com

			(1)	**Basic type**
		902230/40		Screw-in mineral-insulated RTD temperature probe with form J terminal head
		902230/41		Push-in mineral-insulated RTD temperature probe with form J terminal head
			(2)	**Operating temperature in °C**
x	x	150		-200 to +600 °C
x	x	415		-50 to +600 °C (standard)
			(3)	**Measuring insert**
x	x	1001		1× Pt100 in 3-wire circuit
x	x	1003		1× Pt100 in 2-wire circuit (standard for transmitters extra code 330)
x	x	1011		1× Pt100 in 4-wire circuit
x	x	2003		2× Pt100 in 2-wire circuit
			(4)	**Tolerance class according to DIN EN 60751**
x	x	1		Class B (standard)
x	x	2		Class A
x	x	3		Class AA
			(5)	**Protection tube diameter D in mm**
x	x	3		Ø 3 mm
x	x	6		Ø 6 mm
			(6)	**Insertion length EL/NL in mm (at least 100 mm)**
x	x	...		Specification in plain text
			(7)	**Process connection**
	x	000		None
x		102		Screw connection G 1/4
x		104		Screw connection G 1/2
x		105		Screw connection G 3/4
			(8)	**Extra codes**
x	x	000		None
x	x	058		SIL and PL compatible
x	x	330		1× analog transmitter, 4 to 20 mA output, data sheet 707030

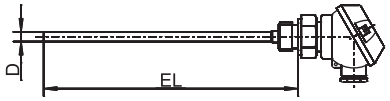

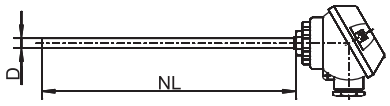

Further versions can be purchased upon request.

	(1)	-	(2)	-	(3)	-	(4)	-	(5)	-	(6)	-	(7)	/	(8)
Order code		-		-		-		-		-		-		/	
Order example	902230/40	-	415	-	1001	-	1	-	3	-	100	-	104	/	000

JUMO GmbH & Co. KG
Delivery address: Mackenrodtstraße 14
36039 Fulda, Germany
Postal address: 36035 Fulda, Germany
Phone: +49 661 6003-0
Fax: +49 661 6003-607
Email: mail@jumo.net
Internet: www.jumo.net

JUMO Instrument Co. Ltd.
JUMO House
Temple Bank, Riverway
Harlow, Essex CM 20 2DY, UK
Phone: +44 1279 63 55 33
Fax: +44 1279 62 50 29
Email: sales@jumo.co.uk
Internet: www.jumo.co.uk

JUMO Process Control, Inc.
6733 Myers Road
East Syracuse, NY 13057, USA
Phone: +1 315 437 5866
Fax: +1 315 437 5860
Email: info.us@jumo.net
Internet: www.jumousa.com

Accessories

Designation	Part no.
Stainless steel compression fitting M8 × 1, stainless steel clamping ring for protection tube diameter D = 3 mm	00080810
Stainless steel compression fitting M8 × 1, PTFE clamping ring for protection tube diameter D = 3 mm	00049709
Stainless steel compression fitting M10 × 1, stainless steel clamping ring for protection tube diameter D = 6 mm	00065416
Stainless steel compression fitting G 1/4, stainless steel clamping ring for protection tube diameter D = 6 mm	00080811
Steel compression fitting G 3/8, steel clamping ring for protection tube diameter D = 6 mm	00057945
Stainless steel compression fitting G 3/8, stainless steel clamping ring for protection tube diameter D = 6 mm	00317966
Stainless steel compression fitting G 1/2, stainless steel clamping ring for protection tube diameter D = 6 mm	00305445
Stainless steel compression fitting 1/2-14NPT, stainless steel clamping ring for protection tube diameter D = 6 mm	00444210
Steel sheet flange for protection tube diameter D = 6 mm	00065062

JUMO GmbH & Co. KG
Delivery address: Mackenrodtstraße 14
36039 Fulda, Germany
Postal address: 36035 Fulda, Germany
Phone: +49 661 6003-0
Fax: +49 661 6003-607
Email: mail@jumo.net
Internet: www.jumo.net

JUMO Instrument Co. Ltd.
JUMO House
Temple Bank, Riverway
Harlow, Essex CM 20 2DY, UK
Phone: +44 1279 63 55 33
Fax: +44 1279 62 50 29
Email: sales@jumo.co.uk
Internet: www.jumo.co.uk

JUMO Process Control, Inc.
6733 Myers Road
East Syracuse, NY 13057, USA
Phone: +1 315 437 5866
Fax: +1 315 437 5860
Email: info.us@jumo.net
Internet: www.jumousa.com

						(1)	**Basic type**
					902250/30		Mineral-insulated RTD temperature probe with PVC connecting cable (line temperature range -5 to +80 °C (+105 °C))
					902250/32		Mineral-insulated RTD temperature probe with silicone connecting cable (line temperature range -50 to +180 °C)
					902250/33		Mineral-insulated RTD temperature probe with PTFE connecting cable (line temperature range -190 to +260 °C)
					902250/34		Mineral-insulated RTD temperature probe with metal-braiding connecting cable (line temperature range -50 to +350 °C)
					902250/35		Mineral-insulated RTD temperature probe with metal-braiding connecting cable (line temperature range -50 to +260 °C)
						(2)	**Operating temperature in °C**
x	x	x	x	x	150		-200 to +600 °C
x	x	x	x	x	415		-50 to +600 °C (standard)
						(3)	**Measuring insert**
x	x	x	x	x	1001		1× Pt100 in 3-wire circuit
x	x	x	x	x	1003		1× Pt100 in 2-wire circuit
x	x	x	x	x	1005		1× Pt1000 in 2-wire circuit (only for operating temperature -50 to +600 °C)
x	x	x	x	x	1006		1× Pt1000 in 3-wire circuit (only for operating temperature -50 to +600 °C)
x	x	x	x	x	1011		1× Pt100 in 4-wire circuit
	x	x	x	x	2001		2× Pt100 in 3-wire circuit (only in combination with protection tube diameter 3 and 6 mm)
x	x	x	x	x	2003		2× Pt100 in 2-wire circuit (only in combination with protection tube diameter 3 and 6 mm)
						(4)	**Tolerance class according to DIN EN 60751**
x	x	x	x	x	1		Class B (standard)
x	x	x	x	x	2		Class A
x	x	x	x	x	3		Class AA
						(5)	**Protection tube diameter D in mm**
x	x	x	x	x	1.9		Ø 1.9 mm (sheath cable Ø 1.5 mm)
x	x	x	x	x	3		Ø 3 mm
x	x	x	x	x	6		Ø 6 mm
						(6)	**Insertion length EL in mm (at least 70 mm)**
x	x	x	x	x	...		Specification in plain text
						(7)	**Connecting cable end**
x	x	x	x	x	11		Ferrules according to DIN 46228 Part 4 (standard)
x	x	x	x	x	80		Multi-pole connector (enter type in plain text)
						(8)	**Connecting cable length AL in mm**
x	x	x	x	x	...		Specification in plain text
						(9)	**Extra codes**
x	x	x			000		None
x	x	x	x	x	058		SIL and PL compatible
x	x	x	x	x	317		Shielded connecting cable (standard for basic type 902250/34 and 902250/35)

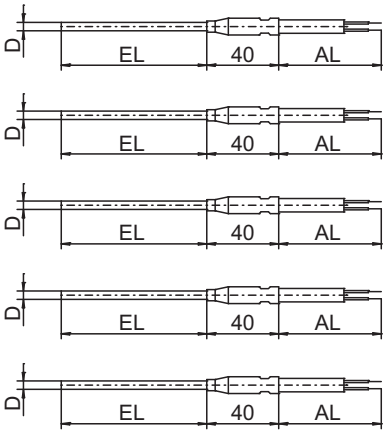

Further versions can be purchased upon request.

	(1)	-	(2)	-	(3)	-	(4)	-	(5)	-	(6)	-	(7)	-	(8	/	(9)
Order code		-		-		-		-		-		-		-		/	
Order example	902250/32	-	415	-	1001	-	1	-	3	-	200	-	11	-	2500	/	000

JUMO GmbH & Co. KG
Delivery address: Mackenrodtstraße 14
36039 Fulda, Germany
Postal address: 36035 Fulda, Germany
Phone: +49 661 6003-0
Fax: +49 661 6003-607
Email: mail@jumo.net
Internet: www.jumo.net

JUMO Instrument Co. Ltd.
JUMO House
Temple Bank, Riverway
Harlow, Essex CM 20 2DY, UK
Phone: +44 1279 63 55 33
Fax: +44 1279 62 50 29
Email: sales@jumo.co.uk
Internet: www.jumo.co.uk

JUMO Process Control, Inc.
6733 Myers Road
East Syracuse, NY 13057, USA
Phone: +1 315 437 5866
Fax: +1 315 437 5860
Email: info.us@jumo.net
Internet: www.jumousa.com

Accessories

Designation	Part no.
Stainless steel compression fitting M8 × 1, stainless steel clamping ring for protection tube diameter D = 3 mm	00080810
Stainless steel compression fitting M8 × 1, PTFE clamping ring for protection tube diameter D = 3 mm	00049709
Stainless steel compression fitting M10 × 1, stainless steel clamping ring for protection tube diameter D = 6 mm	00065416
Stainless steel compression fitting G 1/4, stainless steel clamping ring for protection tube diameter D = 6 mm	00080811
Steel compression fitting G 3/8, steel clamping ring for protection tube diameter D = 6 mm	00057945
Stainless steel compression fitting G 3/8, stainless steel clamping ring for protection tube diameter D = 6 mm	00317966
Stainless steel compression fitting G 1/2, stainless steel clamping ring for protection tube diameter D = 6 mm	00305445
Stainless steel compression fitting 1/2-14NPT, stainless steel clamping ring for protection tube diameter D = 6 mm	00444210

JUMO GmbH & Co. KG
Delivery address: Mackenrodtstraße 14
36039 Fulda, Germany
Postal address: 36035 Fulda, Germany
Phone: +49 661 6003-0
Fax: +49 661 6003-607
Email: mail@jumo.net
Internet: www.jumo.net

JUMO Instrument Co. Ltd.
JUMO House
Temple Bank, Riverway
Harlow, Essex CM 20 2DY, UK
Phone: +44 1279 63 55 33
Fax: +44 1279 62 50 29
Email: sales@jumo.co.uk
Internet: www.jumo.co.uk

JUMO Process Control, Inc.
6733 Myers Road
East Syracuse, NY 13057, USA
Phone: +1 315 437 5866
Fax: +1 315 437 5860
Email: info.us@jumo.net
Internet: www.jumousa.com

Stock versions

Order code	Part no.
902250/32-150-1011-1-1.9-300-11-2500/000	00066531
902250/32-415-1003-1-3-100-11-2500/000	00068243
902250/32-415-1003-1-3-200-11-2500/000	00068244
902250/32-415-1003-1-3-300-11-2500/000	00055763
902250/32-415-1001-1-3-100-11-2500/000	00068247
902250/32-415-1001-1-3-300-11-2500/000	00055764
902250/32-415-1001-1-3-500-11-2500/000	00068248
902250/32-415-1001-1-6-300-11-2500/000	00055767
902250/32-415-1001-1-6-500-11-2500/000	00068250

Order code	Part no.
902230/40-415-1003-1-3-100-104/000	00066731
902230/40-415-1003-1-3-300-104/000	00057512
902230/40-415-1003-1-6-200-104/000	00068252
902230/40-415-1003-1-6-300-104/000	00055775

JUMO GmbH & Co. KG
Delivery address: Mackenrodtstraße 14
36039 Fulda, Germany
Postal address: 36035 Fulda, Germany
Phone: +49 661 6003-0
Fax: +49 661 6003-607
E-mail: mail@jumo.net
Internet: www.jumo.net

JUMO Instrument Co. Ltd.
JUMO House
Temple Bank, Riverway
Harlow, Essex CM20 2DY, UK
Phone: +44 1279 635533
Fax: +44 1279 635262
E-mail: sales@jumo.co.uk
Internet: www.jumo.co.uk

JUMO Process Control, Inc.
6733 Myers Road
East Syracuse, NY 13057, USA
Phone: 315-437-5866
1-800-554-5866
Fax: 315-437-5860
E-mail: info.us@jumo.net
Internet: www.jumousa.com

JUMO FOODtemp

Insertion RTD temperature probe

- **For temperatures between -50 and +260 °C**
- **Steam-tight and pressure-resistant**
- **High mechanical strength**
- **For use in the food industry**
- **Available with multiple measuring points**

Due to their special construction these robust, steam-tight insertion RTD temperature probes are especially suited to cooking, boiling, and baking processes in all areas of food processing and food preservation. Further application areas are autoclaves and sterilizers.

The stainless steel probe tube is available with either a concentric or an oblique probe tip (approx. 25° or 45°).

All versions have a highly vibration-resistant design. The handles are oil-resistant and acid-proof.

A Pt100 temperature sensor according to DIN EN 60751, class B, in a 2-wire circuit or 3-wire circuit is used as standard as a measuring insert.

Technical data

Connection	Cable ends stripped bare; alternatively available with ferrules, plug-in sleeves, or multi-pole plug connectors
Connecting cable	Silicone, ambient temperature -50 to +180 °C PTFE, ambient temperature -50 to +260 °C Shielded connecting cable optionally available
Handle	PPS plastic handle, ambient temperature max. +200 °C Silicone handle, ambient temperature max. +200 °C PTFE handle, ambient temperature max. +260 °C FPM handle, ambient temperature max. +200 °C PEEK handle, ambient temperature max. +260 °C
Protection tube	Stainless steel 1.4571, Ø 4 mm, Ø 4.5 mm
Protection tube tip	Concentric Oblique
Measuring insert	Pt100 temperature sensor, DIN EN 60751, class B, 2-wire circuit
Protection type	IP67

JUMO GmbH & Co. KG
Delivery address: Mackenrodtstraße 14
36039 Fulda, Germany
Postal address: 36035 Fulda, Germany
Phone: +49 661 6003-0
Fax: +49 661 6003-607
E-mail: mail@jumo.net
Internet: www.jumo.net

JUMO Instrument Co. Ltd.
JUMO House
Temple Bank, Riverway
Harlow, Essex CM20 2DY, UK
Phone: +44 1279 635533
Fax: +44 1279 635262
E-mail: sales@jumo.co.uk
Internet: www.jumo.co.uk

JUMO Process Control, Inc.
6733 Myers Road
East Syracuse, NY 13057, USA
Phone: 315-437-5866
1-800-554-5866
Fax: 315-437-5860
E-mail: info.us@jumo.net
Internet: www.jumousa.com

Dimensions

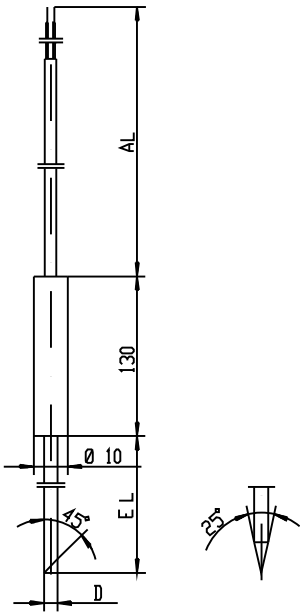

Basic type 902350/22
Basic type 902350/23

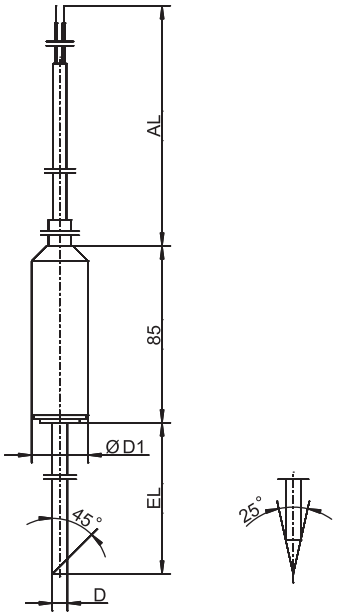

Basic type 902350/33 Ø D1 = 12 mm
Basic type 902350/63 Ø D1 = 15 mm

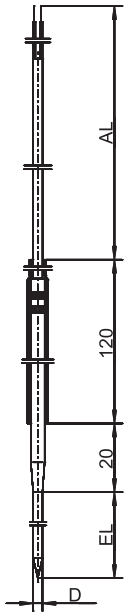

Basic type 902350/37
Basic type 902350/38

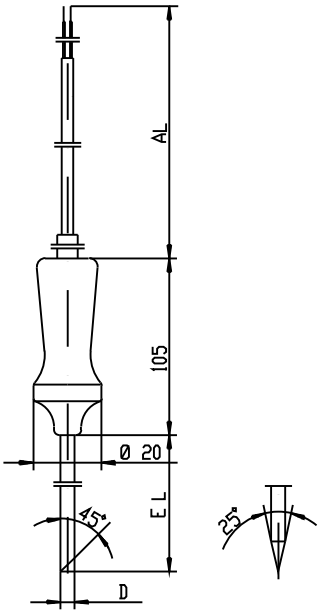

Basic type 902350/43

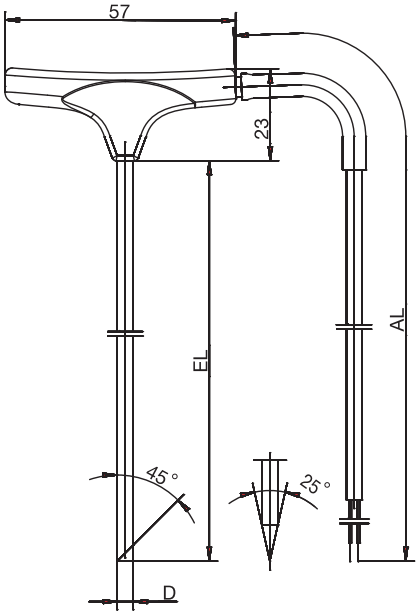

Basic type 902350/83

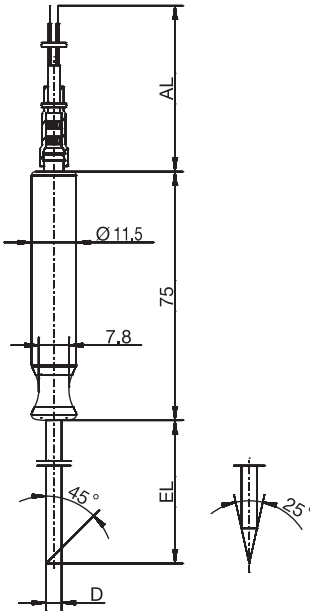

Basic type 902350/84

JUMO GmbH & Co. KG
Delivery address: Mackenrodtstraße 14
36039 Fulda, Germany
Postal address: 36035 Fulda, Germany
Phone: +49 661 6003-0
Fax: +49 661 6003-607
E-mail: mail@jumo.net
Internet: www.jumo.net

JUMO Instrument Co. Ltd.
JUMO House
Temple Bank, Riverway
Harlow, Essex CM20 2DY, UK
Phone: +44 1279 635533
Fax: +44 1279 635262
E-mail: sales@jumo.co.uk
Internet: www.jumo.co.uk

JUMO Process Control, Inc.
6733 Myers Road
East Syracuse, NY 13057, USA
Phone: 315-437-5866
1-800-554-5866
Fax: 315-437-5860
E-mail: info.us@jumo.net
Internet: www.jumousa.com

Order details: Insertion RTD temperature probe

(1) Basic type

902350/22	Insertion RTD temperature probe with silicone handle Ø 10 mm and silicone cable
902350/23	Insertion RTD temperature probe with silicone handle Ø 10 mm and PTFE cable
902350/33	Insertion RTD temperature probe with PTFE handle, Ø D1 = 12 mm and PTFE cable
902350/63	Insertion RTD temperature probe with PTFE handle, Ø D1 = 15 mm and PTFE cable

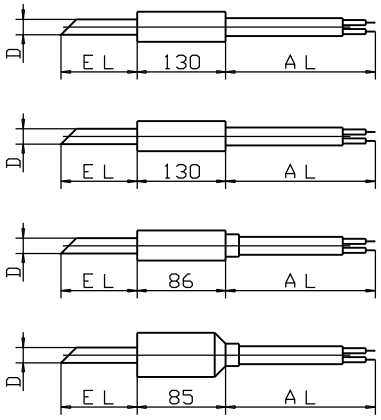

					(2) Operating temperature in °C
x	x			380	-50 to +200 °C
		x	x	386	-50 to +260 °C
					(3) Measuring insert
x	x	x	x	1001	1× Pt100 in 3-wire circuit
x	x	x	x	1003	1× Pt100 in 2-wire circuit
x	x	x	x	1011	1× Pt100 in 4-wire circuit
x	x	x	x	2001	2× Pt100 in 3-wire circuit (not for silicone cables and protection tube diameter D = 4 mm)
x	x	x	x	2003	2× Pt100 in 2-wire circuit
					(4) Tolerance class according to DIN EN 60751
x	x	x	x	1	Class B (standard)
x	x	x	x	2	Class A
					(5) Protection tube diameter D in mm
x	x	x	x	4	Ø 4 mm
x	x	x	x	4.5	Ø 4.5 mm
					(6) Insertion length EL in mm
x	x	x	x	100	100 mm
x	x	x	x	150	150 mm
x	x	x	x	200	200 mm
					(7) Insertion tip
x	x	x	x	2	Concentric
x	x	x	x	3	Oblique
					(8) Connecting cable end
x	x	x	x	11	Ferrules
x	x	x	x	80	Multi-pole plug connector (specify type in plain text)
					(9) Connection cable length AL in mm (500 to 500000 mm)
x	x	x	x	4000	4000 mm (standard)
x	x	x	x	. . .	Specification in plain text (500 mm increments)
					(10) Extra code
x	x	x	x	000	Without
x	x	x	x	317	Shielded connecting cable

	(1)		(2)		(3)		(4)		(5)		(6)		(7)		(8)		(9)		(10)
Order code		-		-		-		-		-		-		-		-		/	
Order example	902350/22	-	380	-	1003	-	1	-	4	-	100	-	3	-	11	-	4000	/	000

JUMO GmbH & Co. KG
Delivery address: Mackenrodtstraße 14
36039 Fulda, Germany
Postal address: 36035 Fulda, Germany
Phone: +49 661 6003-0
Fax: +49 661 6003-607
E-mail: mail@jumo.net
Internet: www.jumo.net

JUMO Instrument Co. Ltd.
JUMO House
Temple Bank, Riverway
Harlow, Essex CM20 2DY, UK
Phone: +44 1279 635533
Fax: +44 1279 635262
E-mail: sales@jumo.co.uk
Internet: www.jumo.co.uk

JUMO Process Control, Inc.
6733 Myers Road
East Syracuse, NY 13057, USA
Phone: 315-437-5866
1-800-554-5866
Fax: 315-437-5860
E-mail: info.us@jumo.net
Internet: www.jumousa.com

Order details: Insertion RTD temperature probe

(1) Basic type

		902350/37	Miniature insertion RTD temperature probe with FPM handle Ø 6.5 mm and silicone cable
		902350/38	Miniature insertion RTD temperature probe with FPM handle Ø 6.5 mm and shielded PTFE cable

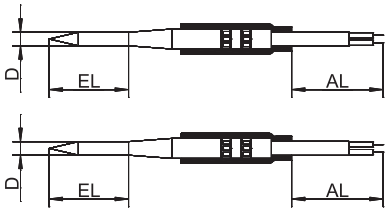

			(2) Operating temperature in °C
x	x	380	-50 to +200 °C
			(3) Measuring insert
	x	1001	1× Pt100 in 3-wire circuit
x	x	1003	1× Pt100 in 2-wire circuit
	x	1011	1× Pt100 in 4-wire circuit
			(4) Tolerance class according to DIN EN 60751
x	x	1	Class B (standard)
x	x	2	Class A
			(5) Protection tube diameter D in mm
x	x	2.5	Ø 4 mm, stepped down to 2.5 mm
			(6) Insertion length EL in mm
x	x	30	30 mm
x	x	50	50 mm
x	x	80	80 mm
x	x	100	100 mm (standard)
			(7) Connecting cable end
x	x	11	Ferrules
x	x	80	Multi-pole plug connector (specify type in plain text)
			(8) Connection cable length AL in mm (500 to 500000 mm)
x	x	4000	4000 mm (standard)
x	x	. . .	Specification in plain text (500 mm increments)

	(1)		(2)		(3)		(4)		(5)		(6)		(7)		(8)
Order code		-		-		-		-		-		-		-	
Order example	902350/37	-	380	-	1003	-	1	-	2.5	-	100	-	11	-	4000

JUMO GmbH & Co. KG
Delivery address: Mackenrodtstraße 14
36039 Fulda, Germany
Postal address: 36035 Fulda, Germany
Phone: +49 661 6003-0
Fax: +49 661 6003-607
E-mail: mail@jumo.net
Internet: www.jumo.net

JUMO Instrument Co. Ltd.
JUMO House
Temple Bank, Riverway
Harlow, Essex CM20 2DY, UK
Phone: +44 1279 635533
Fax: +44 1279 635262
E-mail: sales@jumo.co.uk
Internet: www.jumo.co.uk

JUMO Process Control, Inc.
6733 Myers Road
East Syracuse, NY 13057, USA
Phone: 315-437-5866
1-800-554-5866
Fax: 315-437-5860
E-mail: info.us@jumo.net
Internet: www.jumousa.com

Order details: Insertion RTD temperature probe

(1) Basic type

902350/43 — Insertion RTD temperature probe with PPS plastic handle Ø 20 mm and PTFE cable

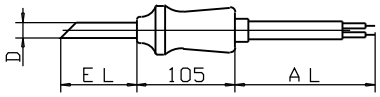

902350/83 — Insertion temperature probe with PEEK handle and PTFE cable

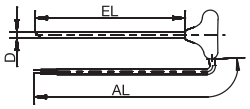

902350/84 — Insertion temperature probe with PEEK handle and PTFE cable

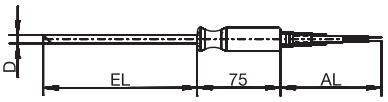

				(2) Operating temperature in °C
x			380	-50 to +200 °C
	x	x	386	-50 to +260 °C
				(3) Measuring insert
x	x	x	1001	1× Pt100 in 3-wire circuit
x	x	x	1003	1× Pt100 in 2-wire circuit
x	x	x	1011	1× Pt100 in 4-wire circuit
x	x		2001	2× Pt100 in 3-wire circuit (not for silicone cables and protection tube diameter D = 4 mm)
x	x	x	2003	2× Pt100 in 2-wire circuit
				(4) Tolerance class according to DIN EN 60751
x	x	x	1	Class B (standard)
x	x	x	2	Class A
				(5) Protection tube diameter D in mm
x	x	x	4	Ø 4 mm
	x		4.5	Ø 4.5 mm
				(6) Insertion length EL in mm
x	x	x	100	100 mm (standard)
x	x	x	150	150 mm
				(7) Insertion tip
x	x	x	2	Concentric
x	x	x	3	Oblique
				(8) Connecting cable end
x	x	x	11	Ferrules
x	x	x	80	Multi-pole plug connector (specify type in plain text)
				(9) Connection cable length AL in mm (500 to 500000 mm)
x	x	x	4000	4000 mm (standard)
x	x	x	. . .	Specification in plain text (500 mm increments)
				(10) Extra code
x	x	x	000	Without
x	x	x	317	Shielded connecting cable

	(1)		(2)		(3)		(4)		(5)		(6)		(7)		(8)		(9)		(10)
Order code		-		-		-		-		-		-		-		-		/	
Order example	902350/83	-	386	-	1001	-	1	-	4.5	-	100	-	2	-	03	-	4000	/	000

JUMO GmbH & Co. KG
Delivery address: Mackenrodtstraße 14
36039 Fulda, Germany
Postal address: 36035 Fulda, Germany
Phone: +49 661 6003-0
Fax: +49 661 6003-607
E-mail: mail@jumo.net
Internet: www.jumo.net

JUMO Instrument Co. Ltd.
JUMO House
Temple Bank, Riverway
Harlow, Essex CM20 2DY, UK
Phone: +44 1279 635533
Fax: +44 1279 635262
E-mail: sales@jumo.co.uk
Internet: www.jumo.co.uk

JUMO Process Control, Inc.
6733 Myers Road
East Syracuse, NY 13057, USA
Phone: 315-437-5866
1-800-554-5866
Fax: 315-437-5860
E-mail: info.us@jumo.net
Internet: www.jumousa.com

Stock versions

(1)		(2)		(3)		(4)		(5)		(6)		(7)		(8)		(9)		(10)	Part no.
902350/22	-	380	-	1003	-	1	-	4	-	100	-	3	-	11	-	4000	/	000	00338150
902350/22	-	380	-	1001	-	1	-	4	-	100	-	2	-	11	-	4000	/	317	00338153
902350/23	-	380	-	1003	-	1	-	4	-	100	-	3	-	11	-	4000	/	000	00085418
902350/23	-	380	-	1003	-	1	-	4	-	100	-	2	-	11	-	4000	/	000	00085420
902350/43	-	380	-	1003	-	1	-	4	-	100	-	3	-	11	-	4000	/	000	00083365
902350/43	-	380	-	1001	-	1	-	4	-	100	-	3	-	11	-	4000	/	000	00083366
902350/43	-	380	-	1003	-	1	-	4	-	100	-	2	-	11	-	4000	/	000	00083791
902350/43	-	380	-	2001	-	1	-	4	-	100	-	2	-	11	-	4000	/	000	00089569
902350/43	-	380	-	1001	-	1	-	4	-	100	-	2	-	11	-	4000	/	000	00083792
902350/63	-	386	-	1001	-	1	-	4	-	100	-	3	-	11	-	4000	/	000	00325270
902350/63	-	386	-	1001	-	1	-	4	-	100	-	2	-	11	-	4000	/	000	00333089
902350/83	-	386	-	1001	-	1	-	4	-	100	-	3	-	11	-	4000	/	000	00523228
902350/84	-	386	-	1001	-	1	-	4	-	100	-	3	-	11	-	4000	/	000	00523235
902350/84	-	386	-	1001	-	1	-	4	-	100	-	2	-	11	-	4000	/	000	00523236

JUMO GmbH & Co. KG
Delivery address: Mackenrodtstraße 14
36039 Fulda, Germany
Postal address: 36035 Fulda, Germany
Phone: +49 661 6003-0
Fax: +49 661 6003-607
Email: mail@jumo.net
Internet: www.jumo.net

JUMO Instrument Co. Ltd.
JUMO House
Temple Bank, Riverway
Harlow, Essex, CM20 2DY, UK
Phone: +44 1279 63 55 33
Fax: +44 1279 62 50 29
Email: sales@jumo.co.uk
Internet: www.jumo.co.uk

JUMO Process Control, Inc.
6733 Myers Road
East Syracuse, NY 13057, USA
Phone: +1 315 437 5866
Fax: +1 315 437 5860
Email: info.us@jumo.net
Internet: www.jumousa.com

JUMO HEATtemp

Screw-in RTD Temperature Probe for Heat Meters with Connecting Cable for Direct Mounting (Type DS/DL)

- **For temperatures between 0 and 180 °C**
- **Type examination certificate for MID heat meters as replaceable temperature probes**
- **Fulfills the requirements of DIN EN 1434, AGFW FW 202, and FW 211**
- **Pairing and declaration of conformity according to MID**
- **Production certified according to module D (MID) (CE and metrology identification marking)**

Heat meter RTD temperature probes are used for temperature measurement in closed pipeline systems. Direct mounting without additional thermowell is recommended to achieve optimum thermal coupling to the measurement medium in the heating system.

The temperature probes are approved according to the EU Directive 2014/32/EU (MID) as well as according to the German Weights and Measures Act (Mess- und Eichgesetz or MessEG).

For heat/cold meters with nominal flows ≤ qp 6 m3/h the installation of temperature probes for a new installation of the pipeline section in the measuring point area with nominal flows ≤ 16 bar is intended. Installation in ball valves has been shown to be the optimum installation location (see data sheet 902442). In addition, emptying the system when installing and replacing the temperature probe at the end of the calibration period is no longer necessary.

The temperature probes are available in a paired and conformity-assessed version. The officially recognized test facility for heat KHE2 is available for this purpose. Production has been certified according to Annex D of Directive 2014/32/EU and Annex 4 Module D of the German Weights and Measures Act.

Technical data

Connection	Ferrules
Connecting cable	PVC, PUR, TPE, silicone; unshielded or shielded
Process connection	Type DS: screw connection M10 × 1, brass according to DIN EN 1434 Type DL: thread G 1/4, G 1/2 stainless steel
Protection tube	Type DS: stainless steel Ø 5.4 mm stepped down to Ø 3.3 mm or Ø 3.6 mm Type DL: stainless steel Ø 8 mm stepped down to Ø 6 mm
Measuring insert	Platinum temperature sensor according to DIN EN 60751 Nominal value: Pt100, Pt500, or Pt1000 Connection: two-wire or four-wire circuit
Temperature	0 to 180 °C
Temperature difference	3 to 180 K
Minimum immersion depth	Type DS: 15 mm Type DL: 30 mm
Insertion length	Type DS: 25 to 60 mm Type DL: 60 to 280 mm
Maximum pressure	PS 25
Flow velocity	2 m/s (water)
Response	Type DS: $t_{0.5}$ = 2 s Type DL: $t_{0.5}$ = 6 s
Thermoelectric voltage	≤ 5 µV
Environmental influences	Climatic 5 to 55 °C Protection type IP65 Mechanical M3

JUMO GmbH & Co. KG
Delivery address: Mackenrodtstraße 14
36039 Fulda, Germany
Postal address: 36035 Fulda, Germany
Phone: +49 661 6003-0
Fax: +49 661 6003-607
Email: mail@jumo.net
Internet: www.jumo.net

JUMO Instrument Co. Ltd.
JUMO House
Temple Bank, Riverway
Harlow, Essex, CM20 2DY, UK
Phone: +44 1279 63 55 33
Fax: +44 1279 62 50 29
Email: sales@jumo.co.uk
Internet: www.jumo.co.uk

JUMO Process Control, Inc.
6733 Myers Road
East Syracuse, NY 13057, USA
Phone: +1 315 437 5866
Fax: +1 315 437 5860
Email: info.us@jumo.net
Internet: www.jumousa.com

Connecting cable lengths according to DIN EN 1434

Conductor cross section	Max. connecting cable length AL for Pt100	Max. connecting cable length AL for Pt500	Max. connecting cable length AL for Pt1000
0.22 mm^2	2500 mm	12500 mm	25000 mm
0.34 mm^2	3500 mm	17500 mm	35000 mm
0.50 mm^2	5000 mm	25000 mm	50000 mm

Note:
The possible limitation of the connecting cable length due to the type examination certificate of the ALU/meter should also be taken into account. For four-wire circuits, the max. connecting cable lengths are limited by the requirements of the ALU/meter.

Overview of approvals

Version	Basic type	Type examination certificate	
		Type	Number
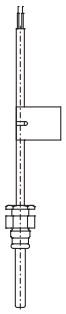	902428/50 (DS)	Module B according to MID[a] (heat)	A0445-2112-2007 (150 °C)
	DS = Direct short (short temperature probe, without immersion sleeve)		
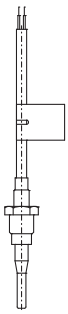	902428/70 (DS)	Module B according to MID[a] (heat)	DE-06-MI004-PTB010 (150 °C)
	902428/20 (DS)	Module B according to MID[a] (heat)	DE-06-MI004-PTB012 (180 °C)
	DS = Direct short (short temperature probe, without immersion sleeve)		
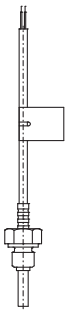	902428/30 (DL) 902428/40 (DL)	Module B according to MID[a] (heat)	DE-06-MI004-PTB011 (180 °C)
	DL = Direct long (long temperature probe, without immersion sleeve)		

[a] MID = Measuring Instruments Directive, 2014/32/EU

JUMO GmbH & Co. KG
Delivery address: Mackenrodtstraße 14
36039 Fulda, Germany
Postal address: 36035 Fulda, Germany
Phone: +49 661 6003-0
Fax: +49 661 6003-607
Email: mail@jumo.net
Internet: www.jumo.net

JUMO Instrument Co. Ltd.
JUMO House
Temple Bank, Riverway
Harlow, Essex, CM20 2DY, UK
Phone: +44 1279 63 55 33
Fax: +44 1279 62 50 29
Email: sales@jumo.co.uk
Internet: www.jumo.co.uk

JUMO Process Control, Inc.
6733 Myers Road
East Syracuse, NY 13057, USA
Phone: +1 315 437 5866
Fax: +1 315 437 5860
Email: info.us@jumo.net
Internet: www.jumousa.com

Dimensions

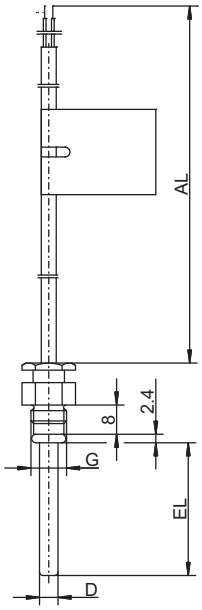

Basic type 902428/50 (DS)

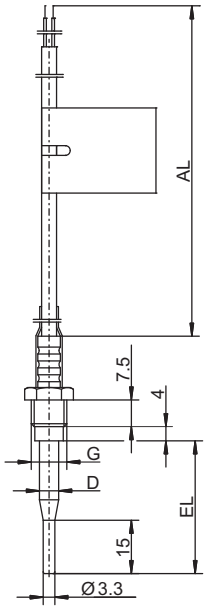

Basic type 902428/20 (DS)

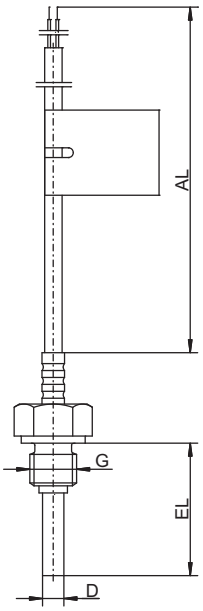

Basic type 902428/30 (DL)

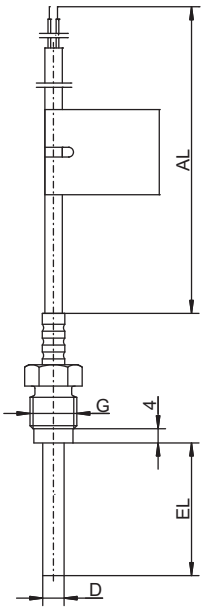

Basic type 902428/40 (DL)

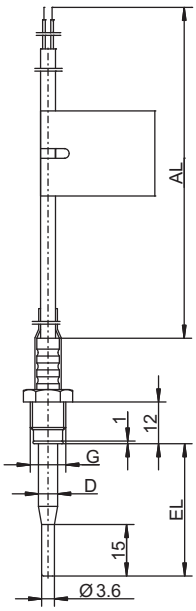

Basic type 902428/70 (DS)

JUMO GmbH & Co. KG
Delivery address: Mackenrodtstraße 14
36039 Fulda, Germany
Postal address: 36035 Fulda, Germany
Phone: +49 661 6003-0
Fax: +49 661 6003-607
Email: mail@jumo.net
Internet: www.jumo.net

JUMO Instrument Co. Ltd.
JUMO House
Temple Bank, Riverway
Harlow, Essex, CM20 2DY, UK
Phone: +44 1279 63 55 33
Fax: +44 1279 62 50 29
Email: sales@jumo.co.uk
Internet: www.jumo.co.uk

JUMO Process Control, Inc.
6733 Myers Road
East Syracuse, NY 13057, USA
Phone: +1 315 437 5866
Fax: +1 315 437 5860
Email: info.us@jumo.net
Internet: www.jumousa.com

Order details: heat meter RTD temperature probe with connecting cable

				(1) Basic type
			902428/50	Screw-in RTD temperature probe for direct mounting (DS) with loose fitting and smooth protection tube $T_{max.}$ = 150 °C
	x		902428/20	Screw-in RTD temperature probe for direct mounting (DS) with loose fitting and offset protection tube $T_{max.}$ = 180 °C
		x	902428/70	Screw-in RTD temperature probe for direct mounting (DS) with loose fitting and offset protection tube $T_{max.}$ = 150 °C
				(2) Operating temperature in °C
x	x	x	815	0 to 105 °C/PVC 105, PUR (only in two-wire circuit)
x	x	x	824	0 to 150 °C/silicone
	x		830	0 to 180 °C/silicone
				(3) Measuring insert
x	x	x	1003	1× Pt100 in two-wire circuit
x	x	x	1004	1 × Pt500 in two-wire circuit
x	x	x	1005	1× Pt1000 in two-wire circuit
x	x	x	1011	1× Pt100 in four-wire circuit
x	x	x	1012	1 × Pt500 in four-wire circuit
x	x	x	1013	1× Pt1000 in four-wire circuit
				(4) Tolerance class according to DIN EN 60751
x	x	x	1	Class B (standard)
	x		2	Class A
	x		3	Class AA
				(5) Protection tube diameter D in mm
x			5	Ø 5 mm
x			5.2	Ø 5.2 mm
	x		5.4	Ø 5.4 mm stepped down to Ø 3.3 mm
		x	5.4	Ø 5.4 mm stepped down to Ø 3.6 mm
				(6) Insertion length EL in mm (25 to 60 mm)
x			26	26 mm
	x	x	27.5	27.5 mm
	x	x	38	38 mm
		x	60	60 mm
x	x		. . .	Specifications in plain text
				(7) Process connection G
x	x	x	114	Screw connection M10 × 1
				(8) Connecting cable end
x	x	x	04	Tin-plated connection strands (only for temperature probes permanently connected to the ALU)
x	x	x	11	Ferrules according to DIN 46228 Part 4 (standard)
				(9) Connecting cable length AL in mm (> 500 mm)
x	x	x	1500	1500 mm
x	x	x	2500	2500 mm (standard)
x	x	x	. . .	Specifications in plain text (increments of 500 mm)
				(10) Extra codes
x	x	x	000	None
x	x	x	317	Shielded connecting cable
x	x	x	318	Spiral connecting cable (only PUR)
x	x	x	340	Paired according to DIN EN 1434[a]
x	x	x	761	Paired according to DIN EN 1434 with conformity assessment/identification marking according to MID[a] (heat)

[a] Price for pairing depends on number of units; minimum quantity for paired temperature probes to be cost effective: 30 pairs

	(1)		(2)		(3)		(4)		(5)		(6)		(7)		(8)		(9)		(10)	
Order code		-		-		-		-		-		-		-		-		/		....[a]
Order example	902428/20	-	830	-	1003	-	1	-	5.4	-	27.5	-	114	-	11	-	2500	/	761	

[a] State extra codes one after another, separated by commas.

JUMO GmbH & Co. KG
Delivery address: Mackenrodtstraße 14
36039 Fulda, Germany
Postal address: 36035 Fulda, Germany
Phone: +49 661 6003-0
Fax: +49 661 6003-607
Email: mail@jumo.net
Internet: www.jumo.net

JUMO Instrument Co. Ltd.
JUMO House
Temple Bank, Riverway
Harlow, Essex, CM20 2DY, UK
Phone: +44 1279 63 55 33
Fax: +44 1279 62 50 29
Email: sales@jumo.co.uk
Internet: www.jumo.co.uk

JUMO Process Control, Inc.
6733 Myers Road
East Syracuse, NY 13057, USA
Phone: +1 315 437 5866
Fax: +1 315 437 5860
Email: info.us@jumo.net
Internet: www.jumousa.com

Order details: heat meter RTD temperature probe with connecting cable

			(1)	**Basic type**
		902428/30		Screw-in RTD temperature probe for direct mounting (DL) with fixed fitting and smooth protection tube
		902428/40		Screw-in RTD temperature probe for direct mounting (DL) with flange and loose screw connection and smooth protection tube
			(2)	**Operating temperature in °C**
x	x	815		0 to 105 °C/PVC 105, PUR (only in two-wire circuit)
x	x	824		0 to 150 °C/silicone
x	x	830		0 to 180 °C/silicone
			(3)	**Measuring insert**
x	x	1003		1× Pt100 in two-wire circuit
x	x	1004		1 × Pt500 in two-wire circuit
x	x	1005		1× Pt1000 in two-wire circuit
x	x	1011		1× Pt100 in four-wire circuit
x	x	1012		1 × Pt500 in four-wire circuit
x	x	1013		1× Pt1000 in four-wire circuit
			(4)	**Tolerance class according to DIN EN 60751**
x	x	1		Class B (standard)
x	x	2		Class A
x	x	3		Class AA
			(5)	**Protection tube diameter D in mm**
x	x	6		Ø 6 mm
x	x	8		Ø 8 mm stepped down to Ø 6 mm
			(6)	**Insertion length EL in mm (60 to 210 mm)**
x	x	85		85 mm
	x	91		91 mm
x	x	120		120 mm
	x	146		146 mm
x		210		210 mm (only for Ø 8 mm stepped down to Ø 6 mm)
x	x	...		Specifications in plain text
			(7)	**Process connection G**
x	x	102		Screw connection G 1/4
x		104		Screw connection G 1/2
x	x	. . .		Specifications in plain text
			(8)	**Connecting cable end**
x	x	04		Tin-plated connection strands (only for temperature probes permanently connected to the ALU)
x	x	11		Ferrules according to DIN 46228 Part 4 (standard)
			(9)	**Connecting cable length AL in mm (> 500 mm)**
x	x	1500		1500 mm
x	x	2500		2500 mm (standard)
x	x	. . .		Specifications in plain text (increments of 500 mm)
			(10)	**Extra codes**
x	x	000		None
x	x	317		Shielded connecting cable
x	x	340		Paired according to DIN EN 1434[a]
x	x	761		Paired according to DIN EN 1434 with declaration of conformity/identification marking according to MID[a]

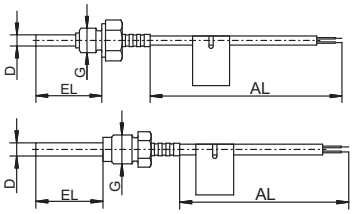

[a] Price for pairing depends on number of units; minimum quantity for paired temperature probes to be cost effective: 30 pairs

	(1)	-	(2)	-	(3)	-	(4)	-	(5)	-	(6)	-	(7)	-	(8)	-	(9)	/	(10)	
Order code	[ ]	-	[ ]	-	[ ]	-	[ ]	-	[ ]	-	[ ]	-	[ ]	-	[ ]	-	[ ]	/	[ ]	,...[a]
Order example	902428/30	-	830	-	1003	-	1	-	6	-	120	-	104	-	11	-	2500	/	761	

[a] State extra codes one after another, separated by commas.

JUMO GmbH & Co. KG
Delivery address: Mackenrodtstraße 14
36039 Fulda, Germany
Postal address: 36035 Fulda, Germany
Phone: +49 661 6003-0
Fax: +49 661 6003-607
Email: mail@jumo.net
Internet: www.jumo.net

JUMO Instrument Co. Ltd.
JUMO House
Temple Bank, Riverway
Harlow, Essex CM 20 2DY, UK
Phone: +44 1279 63 55 33
Fax: +44 1279 62 50 29
Email: sales@jumo.co.uk
Internet: www.jumo.co.uk

JUMO Process Control, Inc.
6733 Myers Road
East Syracuse, NY 13057, USA
Phone: +1 315 437 5866
Fax: +1 315 437 5860
Email: info.us@jumo.net
Internet: www.jumousa.com

Immersion Sleeves for Heat Meter Temperature Probes

- For RTD temperature probes
- RTD temperature probes can be replaced without emptying the system
- Immersion sleeves made from various materials
- Compliant with magnetic inductive flow meters with identification marking
- Available with inspection certificate 3.1

Brief description

Immersion sleeves are used when a replacement of the RTD temperature probes is required without emptying the system and/or pressure resistance. Shorter immersion sleeves are mostly screwed into T-pieces while longer design types are screwed into special welded sockets or welded directly in the pipe wall.

For nominal values up to DN 50, the immersion sleeve should dip above the middle. For larger diameters it should dip into the cross section of the pipe so that it is deep enough (≥ 50 mm) to avoid heat conduction errors.

The minimum immersion depth of the probe being used must also be observed.
The specified dimensions for **EL** refer to the insertion length of the RTD temperature probe; the dimensions for **L** provide the insertion lengths of the immersion sleeves.

Note:
We recommend the following installation in accordance with technical directive TR-K9 (current state of technology):
For heat/cold meters with nominal flows ≤ qp 6 m^3/h, the temperature probes must only be installed directly immersed in the area of the measuring point with nominal pressures ≤ 16 bar when the pipeline section is newly installed. Temperature probes with immersion sleeves can also be installed under these circumstances, but only when under increased strain (for example pressure, temperature, flow velocity, or oscillation).

JUMO GmbH & Co. KG
Delivery address: Mackenrodtstraße 14
36039 Fulda, Germany
Postal address: 36035 Fulda, Germany
Phone: +49 661 6003-0
Fax: +49 661 6003-607
Email: mail@jumo.net
Internet: www.jumo.net

JUMO Instrument Co. Ltd.
JUMO House
Temple Bank, Riverway
Harlow, Essex CM 20 2DY, UK
Phone: +44 1279 63 55 33
Fax: +44 1279 62 50 29
Email: sales@jumo.co.uk
Internet: www.jumo.co.uk

JUMO Process Control, Inc.
6733 Myers Road
East Syracuse, NY 13057, USA
Phone: +1 315 437 5866
Fax: +1 315 437 5860
Email: info.us@jumo.net
Internet: www.jumousa.com

Technical data

Process connection	Screws G 1/4, G 3/8, G 1/2, G 3/4 or welding in
Protection tube Material	 Stainless steel 1.4571 Stainless steel 1.4435 Brass
Insertion lengths Stainless steel Brass	 L = 35 to 400 mm L = 35 to 120 mm

Max. temperature of the immersion sleeves according to the type examination certificate

Basic type	Material	Internal diameter of protection tube D in mm	Insertion length L in mm	Thread	Max. temperature in °C
902440/40 902440/41	Brass	5.0 to 6.0	28 to 115	M10 to G 1/4	105
902440/40 902440/41	Brass	5.0 to 6.0	35 to 115	M10 to G 1/2	105
902440/40 902440/41	Brass	5.0 to 5.2	47 to 115	M10 to G 1/4	150
902440/40 902440/41	Brass	5.0 to 5.2	55 to 115	M14 to G 1/2	150
902440/40 902440/41	Brass	5.0 to 6.0	75 to 165	G 1/4 to G 1/2	150
902440/42	Stainless steel	5.0 to 6.0	49 to 115	G 1/4 to G 1/2	150
902440/42	Stainless steel	5.0 to 6.0	75 to 285	G 1/4 to G 1/2	150
902440/42	Stainless steel	6.0	85 to 280	M10 to G 1/2	180
902440/43	Stainless steel	6.2	85 to 280	M10 to G 1/2	180
902440/44	Stainless steel	6.05	120 to 400	G 3/8 to G 3/4	180
902440/45	Stainless steel	6.2	85 to 280	M10 to G 1/2	180

JUMO GmbH & Co. KG
Delivery address: Mackenrodtstraße 14
36039 Fulda, Germany
Postal address: 36035 Fulda, Germany
Phone: +49 661 6003-0
Fax: +49 661 6003-607
Email: mail@jumo.net
Internet: www.jumo.net

JUMO Instrument Co. Ltd.
JUMO House
Temple Bank, Riverway
Harlow, Essex CM 20 2DY, UK
Phone: +44 1279 63 55 33
Fax: +44 1279 62 50 29
Email: sales@jumo.co.uk
Internet: www.jumo.co.uk

JUMO Process Control, Inc.
6733 Myers Road
East Syracuse, NY 13057, USA
Phone: +1 315 437 5866
Fax: +1 315 437 5860
Email: info.us@jumo.net
Internet: www.jumousa.com

Dimensions

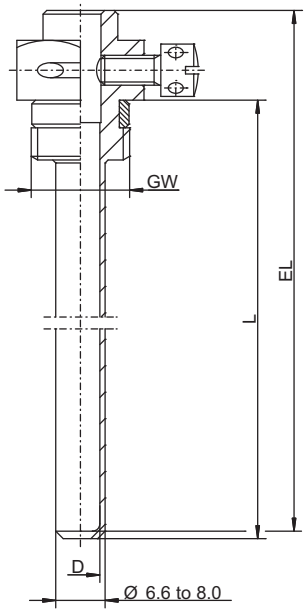

Basic type 902440/40

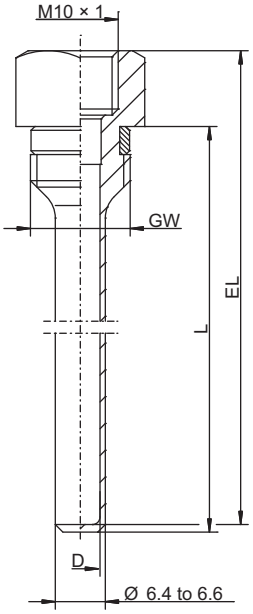

Basic type 902440/41

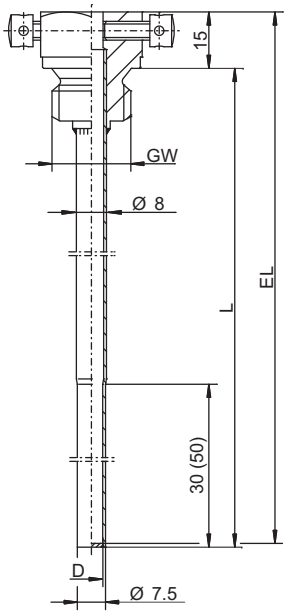

Basic type 902440/42

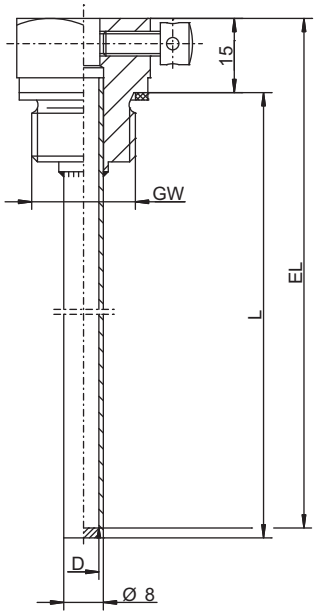

Basic type 902440/43

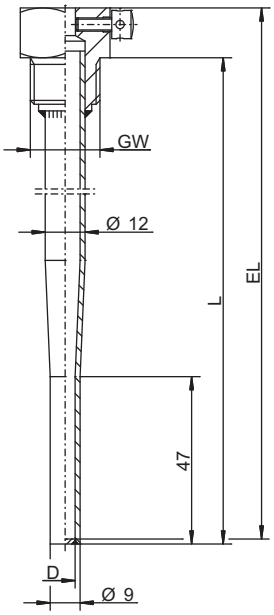

Basic type 902440/44

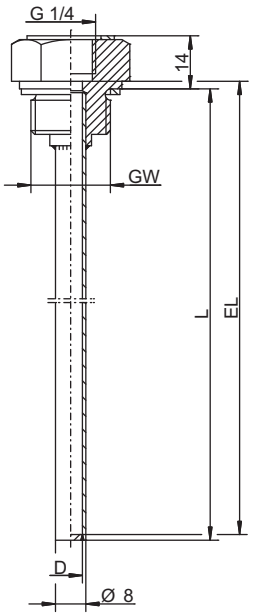

Basic type 902440/45

JUMO GmbH & Co. KG
Delivery address: Mackenrodtstraße 14
36039 Fulda, Germany
Postal address: 36035 Fulda, Germany
Phone: +49 661 6003-0
Fax: +49 661 6003-607
Email: mail@jumo.net
Internet: www.jumo.net

JUMO Instrument Co. Ltd.
JUMO House
Temple Bank, Riverway
Harlow, Essex CM 20 2DY, UK
Phone: +44 1279 63 55 33
Fax: +44 1279 62 50 29
Email: sales@jumo.co.uk
Internet: www.jumo.co.uk

JUMO Process Control, Inc.
6733 Myers Road
East Syracuse, NY 13057, USA
Phone: +1 315 437 5866
Fax: +1 315 437 5860
Email: info.us@jumo.net
Internet: www.jumousa.com

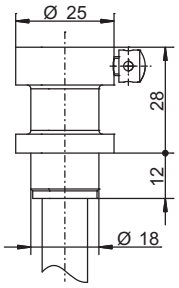

Alternatively, process connection 790 for basic types 902440/42, 902440/43, and 902440/44 with welded-on piece

JUMO GmbH & Co. KG
Delivery address: Mackenrodtstraße 14
36039 Fulda, Germany
Postal address: 36035 Fulda, Germany
Phone: +49 661 6003-0
Fax: +49 661 6003-607
Email: mail@jumo.net
Internet: www.jumo.net

JUMO Instrument Co. Ltd.
JUMO House
Temple Bank, Riverway
Harlow, Essex CM 20 2DY, UK
Phone: +44 1279 63 55 33
Fax: +44 1279 62 50 29
Email: sales@jumo.co.uk
Internet: www.jumo.co.uk

JUMO Process Control, Inc.
6733 Myers Road
East Syracuse, NY 13057, USA
Phone: +1 315 437 5866
Fax: +1 315 437 5860
Email: info.us@jumo.net
Internet: www.jumousa.com

Order details

							(1)	**Basic type**
						902440/40		Immersion sleeve with seal option, straight protection tube, outer diameter 6.6 to 8.0 mm, PN 25
						902440/41		Immersion sleeve with internal thread M10 × 1, straight protection tube, outer diameter 6.4 to 6.6 mm, PN 25
						902440/42		Immersion sleeve with seal option, offset protection tube, outer diameter 8 mm, fit tolerance H10, PN 40
						902440/43		Immersion sleeve with seal option, straight protection tube, outer diameter 8 mm, internal diameter 6.2 mm, PN 40
						902440/44		Immersion sleeve with seal option, offset protection tube, outer diameter 12 mm narrowing to 9 m, internal diameter 6 mm, PN 40
						902440/45		Immersion sleeve with internal thread G 1/4 and seal option, straight protection tube, outer diameter 8 mm, internal diameter 6.15 mm, PN 40
							(2)	**Internal diameter of protection tube D in mm**
x	x					5		Ø 5 mm
x	x	x				5.2		Ø 5.2 mm
x	x	x		x		6		Ø 6 mm
			x		x	6.2		Ø 6.2 mm
							(3)	**Insertion length L in mm (85 to 400 mm for basic type 902440/42 and 902440/43**)
x						35		35 mm (EL = 46 mm)
x	x					40		40 mm (EL = 47 mm)
x	x					50		50 mm (EL = 57 mm)
		x	x		x	85		85 mm (EL = 98 mm, for basic type 902440/45 EL = 85.5 mm)
					x	92.5		92.5 mm (EL = 93 mm)
		x	x	x	x	120		120 mm (EL = 133 mm, for basic type 902440/45 EL = 120.5 mm)
					x	147.5		147.5 mm (EL = 148 mm)
		x	x	x		155		155 mm (EL = 168 mm)
		x	x	x		210		210 mm (EL = 223 mm)
						...		Specifications in plain text
							(4)	**Process connection GW**
x	x					102		Screw connection G 1/4
x						103		Screw connection G 3/8
x		x	x	x	x	104		Screw connection G 1/2
				x		105		Screw connection G 3/4
		x	x	x		790		Weld-in sleeve according to AGFW
							(5)	**Material**
		x	x	x	x	20		Stainless steel
x	x					46		Brass

JUMO GmbH & Co. KG
Delivery address: Mackenrodtstraße 14
36039 Fulda, Germany
Postal address: 36035 Fulda, Germany
Phone: +49 661 6003-0
Fax: +49 661 6003-607
Email: mail@jumo.net
Internet: www.jumo.net

JUMO Instrument Co. Ltd.
JUMO House
Temple Bank, Riverway
Harlow, Essex CM 20 2DY, UK
Phone: +44 1279 63 55 33
Fax: +44 1279 62 50 29
Email: sales@jumo.co.uk
Internet: www.jumo.co.uk

JUMO Process Control, Inc.
6733 Myers Road
East Syracuse, NY 13057, USA
Phone: +1 315 437 5866
Fax: +1 315 437 5860
Email: info.us@jumo.net
Internet: www.jumousa.com

							(6)	Extra codes
x	x	x	x	x	x		000	None
		x	x	x	x		367	Inspection certificate 3.1 (pressure)
		x	x	x	x		374	Inspection certificate 3.1 (material)

	(1)		(2)		(3)		(4)		(5)		(6)	
Order code		-		-		-		-		/		, ...[a]
Order example	902440/40	-	5	-	40	-	102	-	46	/	000	

[a] List extra codes in sequence and separate using commas.

Note:
Accessories, data sheet, and price sheet 902442

Stock versions

Order code	Part no.
902440/40-5.2-35-102-46/000	00611470
902440/40-5.2-50-104-46/000	00326403
902440/41-5.2-40-102-46/000	00362827
902440/43-6.2-85-104-20/000	00349100
902440/43-6.2-120-104-20/000	00352465
902440/43-6.2-155-104-20/000	00352467
902440/43-6.2-210-104-20/000	00372878
902440/45-6.2-92.5-104-20/000	00037054
902440/45-6.2-147.5-104-20/000	00037944

JUMO GmbH & Co. KG
Delivery address: Mackenrodtstraße 14
36039 Fulda, Germany
Postal address: 36035 Fulda, Germany
Phone: +49 661 6003-0
Fax: +49 661 6003-607
Email: mail@jumo.net
Internet: www.jumo.net

JUMO Instrument Co. Ltd.
JUMO House
Temple Bank, Riverway
Harlow, Essex CM 20 2DY, UK
Phone: +44 1279 63 55 33
Fax: +44 1279 62 50 29
Email: sales@jumo.co.uk
Internet: www.jumo.co.uk

JUMO Process Control, Inc.
6733 Myers Road
East Syracuse, NY 13057, USA
Phone: +1 315 437 5866
Fax: +1 315 437 5860
Email: info.us@jumo.net
Internet: www.jumousa.com

Installation Locations and Accessories for Temperature Probes

- **Ball valves**
- **T-pieces**
- **Adapter screw fittings**
- **Installation accessories**

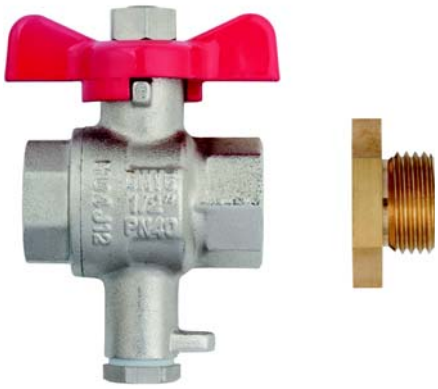

The correct selection of installation locations for acquiring the representative local temperature is a necessary precursor to temperature measurement in pipelines.
The high degree of accuracy of temperature probes is frequently lost as a result of the device being incorrectly installed – this usually leads to the incorrect assessment that the probe is of poor quality.
As a result, the correct installation location is the first step for correct temperature measurement.

Technical data

Ball valve	Ball valves essentially serve as an installation location where they function as a shut-off device with an integrated measuring point for a directly connected temperature probe. They fulfill the requirements of integrated environmental protection. That means prevention/reduction of stresses and strains right where they could develop. The pipe systems do not have to be emptied when the temperature probe is installed or exchanged. The measuring point in the ball valve represents the best temperature measurement that is available today in pipelines with a small nominal width. The measuring point corresponds to the regulations of EN 1434-2 and is designed so that the temperature sensor is positioned in the pipeline at an optimum mounting depth.
T-piece	T-pieces are ideal installation locations for thermowells, especially when an optimal coordination of the immersion depth is an inherent feature of the design. When using the intended temperature probe, a measuring point with the maximum immersion depth for the respective pipe cross section is available. This is the only way to attain in which a minimal heat conduction error is attained.
Adapter screw fittings	Adapter screw fittings are used for the adaptation of process connection threads to the thread of thermowells or temperature probes. The right choice prevents the formation of a tower, which would cause the active measuring part of the temperature probe to inch out of the center of the pipe.
Installation accessories	Installation accessories such as welded sockets complete the assortment for the adaptation of the installation location to the temperature probe or the thermowell.

JUMO GmbH & Co. KG
Delivery address: Mackenrodtstraße 14
36039 Fulda, Germany
Postal address: 36035 Fulda, Germany
Phone: +49 661 6003-0
Fax: +49 661 6003-607
Email: mail@jumo.net
Internet: www.jumo.net

JUMO Instrument Co. Ltd.
JUMO House
Temple Bank, Riverway
Harlow, Essex CM 20 2DY, UK
Phone: +44 1279 63 55 33
Fax: +44 1279 62 50 29
Email: sales@jumo.co.uk
Internet: www.jumo.co.uk

JUMO Process Control, Inc.
6733 Myers Road
East Syracuse, NY 13057, USA
Phone: +1 315 437 5866
Fax: +1 315 437 5860
Email: info.us@jumo.net
Internet: www.jumousa.com

Dimensions

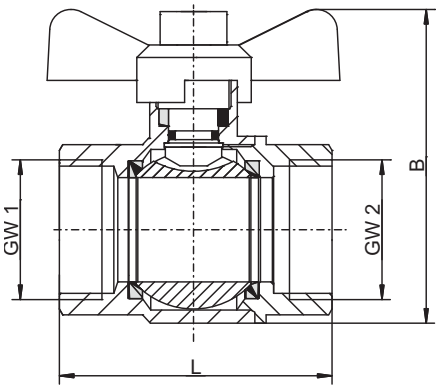

	G 1/2	G 3/4	G 1	G 1 1/4	G 1 1/2
L	50	55	68	100	110
W	49	61	74	94	112

Basic type 902442/10

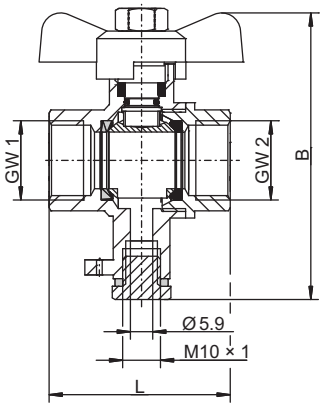

	G 1/2	G 3/4	G 1	G 1 1/4	G 1 1/2	G 2
L	48	54	66	87	98	113
W	77	79	96	117	128	145

Basic type 902442/11

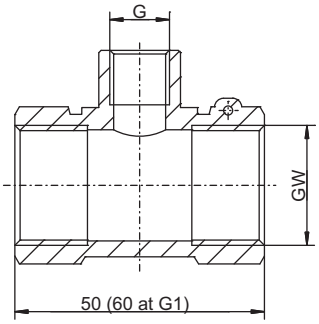

Basic type 902442/31

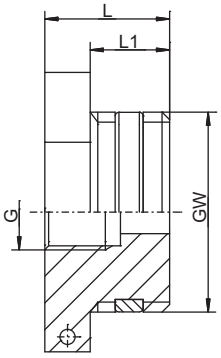

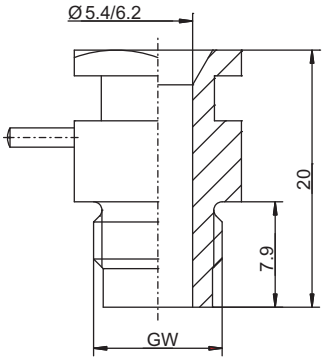

GW	L	L1	G
G 1/4	21	10	M10 × 1
G 3/8	16.5	10.5	M10 × 1
G 3/8	29	15	G 1/4
G 1/2	16.5	10.5	M10 × 1
G 1/2	29	15	G 1/4
G 3/4	16.5	10.5	M10 × 1
G 3/4	29	15	G 1/4
M10 × 1	20	8	M10 × 1

Basic type 902442/50

Basic type 902442/60

JUMO GmbH & Co. KG
Delivery address: Mackenrodtstraße 14
36039 Fulda, Germany
Postal address: 36035 Fulda, Germany
Phone: +49 661 6003-0
Fax: +49 661 6003-607
Email: mail@jumo.net
Internet: www.jumo.net

JUMO Instrument Co. Ltd.
JUMO House
Temple Bank, Riverway
Harlow, Essex CM 20 2DY, UK
Phone: +44 1279 63 55 33
Fax: +44 1279 62 50 29
Email: sales@jumo.co.uk
Internet: www.jumo.co.uk

JUMO Process Control, Inc.
6733 Myers Road
East Syracuse, NY 13057, USA
Phone: +1 315 437 5866
Fax: +1 315 437 5860
Email: info.us@jumo.net
Internet: www.jumousa.com

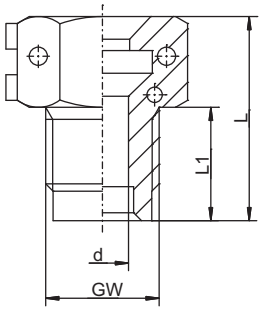

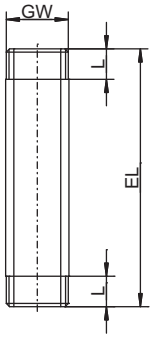

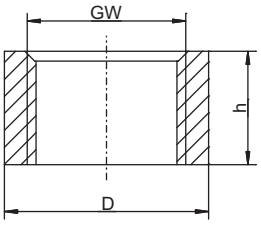

GW	L1	L	d	Rolling
M10 × 1	8.2	18	5.4	1 or 3
M10 × 1	8.2	16.2	4.6	0
M10 × 1	8.2	16.2	5.4	2
G 1/4	10	18	6.3	1

Basic type 902442/61

GW	L
G 3/4	13
G 1	16
G 1 1/4	18
G 2	20

Basic type 902442/65

GW	D	h
G 1/4	18.5	25
G 1/2	27	22

Basic type 902442/67

JUMO GmbH & Co. KG
Delivery address: Mackenrodtstraße 14
36039 Fulda, Germany
Postal address: 36035 Fulda, Germany
Phone: +49 661 6003-0
Fax: +49 661 6003-607
Email: mail@jumo.net
Internet: www.jumo.net

JUMO Instrument Co. Ltd.
JUMO House
Temple Bank, Riverway
Harlow, Essex CM 20 2DY, UK
Phone: +44 1279 63 55 33
Fax: +44 1279 62 50 29
Email: sales@jumo.co.uk
Internet: www.jumo.co.uk

JUMO Process Control, Inc.
6733 Myers Road
East Syracuse, NY 13057, USA
Phone: +1 315 437 5866
Fax: +1 315 437 5860
Email: info.us@jumo.net
Internet: www.jumousa.com

Order Details

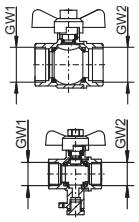

			(1)	**Basic type**
		902442/10		Ball valve with 2 process connections, without measuring sockets, nickel-plated brass, $T_{max.}$ = 150 °C, PN = 16 bar
		902442/11		Ball valve with 2 process connections, with measuring sockets, for installing type DS temperature probes, nickel-plated brass, $T_{max.}$ = 150 °C, PN = 16 bar
			(2)	**Process connection GW**
x	x	000		Without (not relevant)
			(3)	**Process connection GW 1**
x	x	104		Thread G 1/2
x	x	105		Thread G 3/4
x	x	106		Thread G 1
x	x	107		Thread G 1 1/4
x	x	108		Thread G 1 1/2
	x	110		Thread G 2
			(4)	**Process connection GW 2**
	x	104		Thread G 1/2
x	x	105		Thread G 3/4
x	x	106		Thread G 1
x	x	107		Thread G 1 1/4
x	x	108		Thread G 1 1/2
	x	110		Thread G 2
			(5)	**Measuring socket G**
x		000		Without (not relevant)
	x	104		Thread G 1/2
	x	114		Thread M10 × 1 (according to DIN EN 1434)
			(6)	**Insertion length EL in mm**
x	x	000		Without (not relevant)
			(7)	**Material**
x	x	00		Without (not relevant)

	(1)		(2)		(3)		(4)		(5)		(6)		(7)
Order code		-		-		-		-		-		-	
Order example	902442/11	-	000	-	104	-	104	-	000	-	000	-	00

JUMO GmbH & Co. KG
Delivery address: Mackenrodtstraße 14
36039 Fulda, Germany
Postal address: 36035 Fulda, Germany
Phone: +49 661 6003-0
Fax: +49 661 6003-607
Email: mail@jumo.net
Internet: www.jumo.net

JUMO Instrument Co. Ltd.
JUMO House
Temple Bank, Riverway
Harlow, Essex CM 20 2DY, UK
Phone: +44 1279 63 55 33
Fax: +44 1279 62 50 29
Email: sales@jumo.co.uk
Internet: www.jumo.co.uk

JUMO Process Control, Inc.
6733 Myers Road
East Syracuse, NY 13057, USA
Phone: +1 315 437 5866
Fax: +1 315 437 5860
Email: info.us@jumo.net
Internet: www.jumousa.com

Order Details

		(1)	**Basic type**
	902442/31		T-piece with same internal thread on both sides, with measuring socket, continuous thread, brass
		(2)	**Process connection GW**
x	104		Thread G 1/2
x	105		Thread G 3/4
x	106		Thread G 1
		(3)	**Process connection GW 1**
x	000		Without (not relevant)
		(4)	**Process connection GW 2**
x	000		Without (not relevant)
		(5)	**Measuring socket G**
x	102		Thread G 1/4
x	114		Thread M10 × 1 (according to DIN EN 1434)
		(6)	**Insertion length EL in mm**
x	000		Without (not relevant)
		(7)	**Material**
x	00		Without (not relevant)

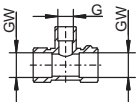

	(1)		(2)		(3)		(4)		(5)		(6)		(7)
Order code		-		-		-		-		-		-	
Order example	902442/31	-	104	-	000	-	000	-	102	-	000	-	00

JUMO GmbH & Co. KG
Delivery address: Mackenrodtstraße 14
36039 Fulda, Germany
Postal address: 36035 Fulda, Germany
Phone: +49 661 6003-0
Fax: +49 661 6003-607
Email: mail@jumo.net
Internet: www.jumo.net

JUMO Instrument Co. Ltd.
JUMO House
Temple Bank, Riverway
Harlow, Essex CM 20 2DY, UK
Phone: +44 1279 63 55 33
Fax: +44 1279 62 50 29
Email: sales@jumo.co.uk
Internet: www.jumo.co.uk

JUMO Process Control, Inc.
6733 Myers Road
East Syracuse, NY 13057, USA
Phone: +1 315 437 5866
Fax: +1 315 437 5860
Email: info.us@jumo.net
Internet: www.jumousa.com

Order Details

		(1)	**Basic type**
	902442/50		Adapter screw fitting, for installing type DS temperature probes
		(2)	**Process connection GW**
x	102		Thread G 1/4 (with measuring socket, thread M10 × 1)
x	103		Thread G 3/8
x	104		Thread G 1/2
x	105		Thread G 3/4
x	114		Thread M10 × 1 (according to DIN EN 1434)
		(3)	**Process connection GW 1**
x	000		Without (not relevant)
		(4)	**Process connection GW 2**
x	000		Without (not relevant)
		(5)	**Measuring socket G**
x	102		Thread G 1/4
x	114		Thread M10 × 1 (according to DIN EN 1434)
		(6)	**Insertion length EL in mm**
x	000		Without (not relevant)
		(7)	**Material**
x	20		Stainless steel (with measuring socket, thread G 1/4)
x	46		Brass

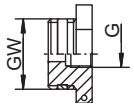

	(1)		(2)		(3)		(4)		(5)		(6)		(7)
Order code		-		-		-		-		-		-	
Order example	902442/50	-	102	-	000	-	000	-	114	-	000	-	46

JUMO GmbH & Co. KG
Delivery address: Mackenrodtstraße 14
36039 Fulda, Germany
Postal address: 36035 Fulda, Germany
Phone: +49 661 6003-0
Fax: +49 661 6003-607
Email: mail@jumo.net
Internet: www.jumo.net

JUMO Instrument Co. Ltd.
JUMO House
Temple Bank, Riverway
Harlow, Essex CM 20 2DY, UK
Phone: +44 1279 63 55 33
Fax: +44 1279 62 50 29
Email: sales@jumo.co.uk
Internet: www.jumo.co.uk

JUMO Process Control, Inc.
6733 Myers Road
East Syracuse, NY 13057, USA
Phone: +1 315 437 5866
Fax: +1 315 437 5860
Email: info.us@jumo.net
Internet: www.jumousa.com

Order Details

					(1)	**Basic type**
				902442/60		Screw connection set for probe modification for direct installation in installation locations according to DIN EN 1434, as swivel (brass) or with 2 half-shells (plastic)
				902442/61		Screw connection for temperature probe installation in thermowells or direct installation, as swivel (brass) or with 2 half-shells (plastic)
				902442/65		Double nipple (spacer)
				902442/67		Welded socket
					(2)	**Process connection GW**
	x		x	102		Thread G 1/4 (with inner diameter of 6.3 mm)
			x	104		Thread G 1/2
		x		105		Thread G 3/4
		x		106		Thread G 1
		x		107		Thread G 1 1/4
		x		110		Thread G 2
x	x			114		Thread M10 × 1 (according to DIN EN 1434) (with inner diameter of 5 to 6.2 mm)
					(3)	**Process connection GW 1**
x	x	x	x	000		Without (not relevant)
					(4)	**Process connection GW 2**
x	x	x	x	000		Without (not relevant)
					(5)	**Measuring socket G**
x	x	x	x	000		Without (not relevant)
					(6)	**Insertion length EL in mm**
x	x		x	000		None
		x		105		105 mm (with thread G 1)
		x		110		110 mm (with thread G 3/4)
		x		130		130 mm (with thread G 1)
		x		135		135 mm (with thread G 1 1/4)
		x		150		150 mm (with thread G 2)
		x		190		190 mm (with thread G 1)
		x		260		260 mm (with thread G 1 1/4)
		x		300		300 mm (with thread G 2)
					(7)	**Material**
		x	x	01		Steel
x	x			46		Brass
x	x			85		Plastic

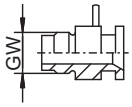

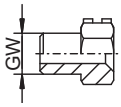

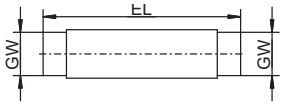

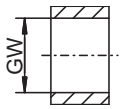

	(1)		(2)		(3)		(4)		(5)		(6)		(7)
Order code		-		-		-		-		-		-	
Order example	902442/60	-	114	-	000	-	000	-	000	-	000	-	46

JUMO GmbH & Co. KG
Delivery address: Mackenrodtstraße 14
36039 Fulda, Germany
Postal address: 36035 Fulda, Germany
Phone: +49 661 6003-0
Fax: +49 661 6003-607
Email: mail@jumo.net
Internet: www.jumo.net

JUMO Instrument Co. Ltd.
JUMO House
Temple Bank, Riverway
Harlow, Essex CM 20 2DY, UK
Phone: +44 1279 63 55 33
Fax: +44 1279 62 50 29
Email: sales@jumo.co.uk
Internet: www.jumo.co.uk

JUMO Process Control, Inc.
6733 Myers Road
East Syracuse, NY 13057, USA
Phone: +1 315 437 5866
Fax: +1 315 437 5860
Email: info.us@jumo.net
Internet: www.jumousa.com

Stock versions

(1)		(2)		(3)		(4)		(5)		(6)		(7)	Part no.
902442/10	-	000	-	105	-	105	-	000	-	000	-	000	00540657
902442/10	-	000	-	106	-	106	-	000	-	000	-	000	00540649
902442/11	-	000	-	104	-	104	-	000	-	000	-	000	00539347
902442/11	-	000	-	105	-	105	-	000	-	000	-	000	00539350
902442/11	-	000	-	106	-	106	-	000	-	000	-	000	00539351
902442/31	-	104	-	000	-	000	-	102	-	000	-	000	00329064
902442/31	-	105	-	000	-	000	-	102	-	000	-	000	00329067
902442/31	-	106	-	000	-	000	-	102	-	000	-	000	00329068
902442/50	-	104	-	000	-	000	-	114	-	000	-	46	00062424
902442/50	-	104	-	000	-	000	-	102	-	000	-	20	00564716
902442/60	-	114	-	000	-	000	-	000	-	000	-	46	00355259
902442/61	-	114	-	000	-	000	-	000	-	000	-	85	00378797

Accessories for installation locations

Designation	Part no.
Set for identifying and sealing thermowells (sealing set, diameter gage, and information sheet)	00583467
PTB sealing set, stock thermowells (wire seal and double seal)	00580246
Sealing set	00650727
Extension Socket for Temperature Probe Pairs	00679799

JUMO GmbH & Co. KG
Delivery address: Mackenrodtstraße 14
36039 Fulda, Germany
Postal address: 36035 Fulda, Germany
Phone: +49 661 6003-0
Fax: +49 661 6003-607
Email: mail@jumo.net
Internet: www.jumo.net

JUMO Instrument Co. Ltd.
JUMO House
Temple Bank, Riverway
Harlow, Essex, CM20 2DY, UK
Phone: +44 1279 63 55 33
Fax: +44 1279 62 50 29
Email: sales@jumo.co.uk
Internet: www.jumo.co.uk

JUMO Process Control, Inc.
6733 Myers Road
East Syracuse, NY 13057, USA
Phone: +1 315 437 5866
Fax: +1 315 437 5860
Email: info.us@jumo.net
Internet: www.jumousa.com

JUMO HEATtemp

Screw-in RTD Temperature Probe for Combined Cold/Heat Meters with Terminal Head for Direct Mounting (Type DL)

- **For temperatures from 0 to 120 °C (cold) and 0 to 180 °C (heat)**
- **Type examination certificate for heat meters; MID and domestic approval for combined cold/heat meters as replaceable temperature probes**
- **Fulfills the requirements of DIN EN 1434, AGFW FW 202, and FW 211**
- **Pairing and declaration of conformity according to German Weights and Measures Act and MID**
- **Production certified according to module D (MID) (CE and metrology identification marking)**

Combined cold/heat meter RTD temperature probes are used for temperature measurement in closed pipeline systems. Direct mounting without an additional immersion sleeve is recommended to achieve optimum thermal coupling to the measurement medium in the heating system.
The temperature probes are approved according to the EU Directive 2014/32/EU (MID) as well as according to the German Weights and Measures Act (Mess- und Eichgesetz or MessEG).
The implementation of the requirements of the European Directive 2014/32/EU (MID) and the German Weights and Measures Act (MessEG) ensures that our temperature probe pairs can be deployed as a sub-assembly for cold and heat meters when operated in line with their intended use.
The temperature probes are also available in paired and conformity-assessed versions. The officially recognized test facility for heat KHE2 is available for this purpose. Production has been certified according to Annex D of Directive 2014/32/EU and Annex 4 Module D of the German Weights and Measures Act.

Technical data

Terminal head	Form B, aluminium die-cast, M24 × 1.5, IP65, ambient temperature -20 to +100 °C
Process connection	Thread G 1/2, stainless steel
Protection tube	Stainless steel, Ø 6 mm or Ø 8 mm stepped down to Ø 6 mm
Measuring insert	Platinum temperature sensor according to DIN EN 60751 Nominal value: Pt100, Pt500, or Pt1000 Connection: two-wire or four-wire circuit
Temperature	0 to 120 °C (cold) 0 to 180 °C (heat)
Temperature difference	3 to 120 K (cold) 3 to 180 K (heat)
Minimum immersion depth	25 mm
Insertion length	85 to 280 mm
Maximum pressure	PS 25
Flow velocity	2 m/s (water)
Response	$t_{0.5} \leq 5$ s
Thermoelectric voltage	≤ 5 µV
Environmental influences	Climatic 5 to 55 °C Protection type IP65 Mechanical M3

JUMO GmbH & Co. KG
Delivery address: Mackenrodtstraße 14
36039 Fulda, Germany
Postal address: 36035 Fulda, Germany
Phone: +49 661 6003-0
Fax: +49 661 6003-607
Email: mail@jumo.net
Internet: www.jumo.net

JUMO Instrument Co. Ltd.
JUMO House
Temple Bank, Riverway
Harlow, Essex, CM20 2DY, UK
Phone: +44 1279 63 55 33
Fax: +44 1279 62 50 29
Email: sales@jumo.co.uk
Internet: www.jumo.co.uk

JUMO Process Control, Inc.
6733 Myers Road
East Syracuse, NY 13057, USA
Phone: +1 315 437 5866
Fax: +1 315 437 5860
Email: info.us@jumo.net
Internet: www.jumousa.com

Dimensions

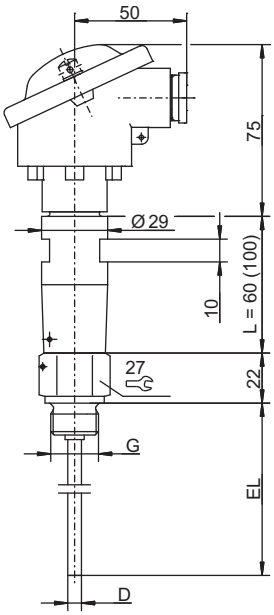

Basic type 902454/10 (DL)

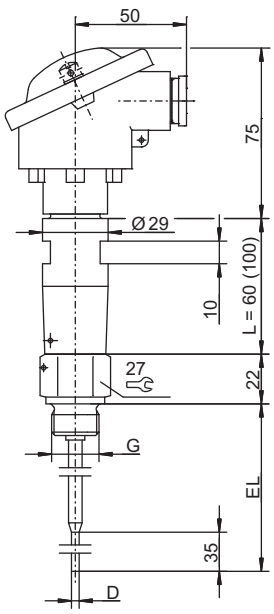

Basic type 902454/11 (DL)

JUMO GmbH & Co. KG
Delivery address: Mackenrodtstraße 14
36039 Fulda, Germany
Postal address: 36035 Fulda, Germany
Phone: +49 661 6003-0
Fax: +49 661 6003-607
Email: mail@jumo.net
Internet: www.jumo.net

JUMO Instrument Co. Ltd.
JUMO House
Temple Bank, Riverway
Harlow, Essex, CM20 2DY, UK
Phone: +44 1279 63 55 33
Fax: +44 1279 62 50 29
Email: sales@jumo.co.uk
Internet: www.jumo.co.uk

JUMO Process Control, Inc.
6733 Myers Road
East Syracuse, NY 13057, USA
Phone: +1 315 437 5866
Fax: +1 315 437 5860
Email: info.us@jumo.net
Internet: www.jumousa.com

Overview of approvals

Basic type	Type examination certificate	
	Type	**Number**
902454/10 (DL) 902454/11 (DL) DL = Direct long (long temperature probe, without immersion sleeve)	Weights and Measures Act (Germany, cold)	DE-15-M-PTB-0051

JUMO GmbH & Co. KG
Delivery address: Mackenrodtstraße 14
36039 Fulda, Germany
Postal address: 36035 Fulda, Germany
Phone: +49 661 6003-0
Fax: +49 661 6003-607
Email: mail@jumo.net
Internet: www.jumo.net

JUMO Instrument Co. Ltd.
JUMO House
Temple Bank, Riverway
Harlow, Essex, CM20 2DY, UK
Phone: +44 1279 63 55 33
Fax: +44 1279 62 50 29
Email: sales@jumo.co.uk
Internet: www.jumo.co.uk

JUMO Process Control, Inc.
6733 Myers Road
East Syracuse, NY 13057, USA
Phone: +1 315 437 5866
Fax: +1 315 437 5860
Email: info.us@jumo.net
Internet: www.jumousa.com

Order details: Combined cold/heat meter RTD temperature probe with terminal head

			(1)	**Basic type**
		902454/10		Screw-in RTD temperature probe with terminal head form B (standard) and continuous protection tube, design type DL
		902454/11		Screw-in RTD temperature probe with terminal head form B (standard) and stepped protection tube, design type DL
			(2)	**Operating temperature in °C**
x	x	818		0 to 120 °C
			(3)	**Measuring insert**
x	x	1003		1 × Pt100 in two-wire circuit
x	x	1004		1 × Pt500 in two-wire circuit
x	x	1005		1 × Pt1000 in two-wire circuit
x	x	1011		1 × Pt100 in four-wire circuit
x	x	1012		1 × Pt500 in four-wire circuit
x	x	1013		1 × Pt1000 in four-wire circuit
			(4)	**Tolerance class according to DIN EN 60751**
x	x	1		Class B (standard)
x	x	2		Class A
x	x	3		Class AA
			(5)	**Protection tube diameter D in mm**
x		6		Ø 6 mm (standard)
	x	8		Ø 8 mm stepped down to Ø 6 mm
			(6)	**Insertion length EL in mm (85 to 400 mm)**
x	x	85		85 mm
x	x	120		120 mm
x	x	155		155 mm
x	x	210		210 mm
x	x	. . .		Specifications in plain text
			(7)	**Process connection**
x	x	104		Screw connection G 1/2
x	x	. . .		Specifications in plain text
			(8)	**Extra codes**
x	x	000		None
x	x	340		Paired according to DIN EN 1434[a]
x	x	341		Paired according to DIN EN 1434 with conformity assessment/identification marking according to MessEG[a] (cold, Germany)
x	x	761		Paired according to DIN EN 1434 with conformity assessment/identification marking according to MID[a] (heat)

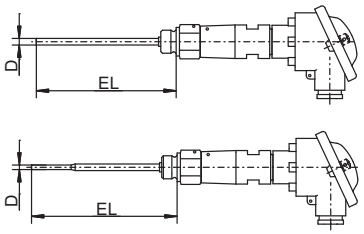

[a] Price for pairing depends on number of units; cost effective from 30 pairs of temperature probes

	(1)		(2)		(3)		(4)		(5)		(6)		(7)		(8)	
Order code		-		-		-		-		-		-		/		, ...[a]
Order example	902454/10	-	818	-	1003	-	1	-	6	-	85	-	104	/	341,761	

[a] List extra codes in sequence and separate using commas.

Note:
Terminal heads, data sheet 909715
Accessories, data sheet 902442

JUMO GmbH & Co. KG
Delivery address: Mackenrodtstraße 14
36039 Fulda, Germany
Postal address: 36035 Fulda, Germany
Phone: +49 661 6003-0
Fax: +49 661 6003-607
Email: mail@jumo.net
Internet: www.jumo.net

JUMO Instrument Co. Ltd.
JUMO House
Temple Bank, Riverway
Harlow, Essex, CM20 2DY, UK
Phone: +44 1279 63 55 33
Fax: +44 1279 62 50 29
Email: sales@jumo.co.uk
Internet: www.jumo.co.uk

JUMO Process Control, Inc.
6733 Myers Road
East Syracuse, NY 13057, USA
Phone: +1 315 437 5866
Fax: +1 315 437 5860
Email: info.us@jumo.net
Internet: www.jumousa.com

JUMO HEATtemp

Screw-in RTD Temperature Probe for Combined Cold/Heat Meters for Direct Mounting (Type DS/DL)

- **For temperatures from 0 to 120 °C (cold) and 0 to 180 °C (heat)**
- **Type examination certificate for MID heat meters and domestic approval for cold meters as replaceable temperature probes**
- **Fulfills the requirements of DIN EN 1434, AGFW FW 202, and FW 211**
- **Pairing and declaration of conformity according to German Weights and Measures Act and MID**
- **Production certified according to module D (MID) (CE and metrology identification marking)**

Combined cold/heat meter RTD temperature probes are used for temperature measurement in closed pipeline systems. Direct mounting without additional immersion sleeves is recommended to achieve optimum thermal coupling to the measurement medium in the heating system.

The temperature probes are approved according to the EU Directive 2014/32/EU (MID) as well as according to the German Weights and Measures Act (Mess- und Eichgesetz or MessEG).

Installation in ball valves has been shown to be the optimum installation location (see data sheet 902442). In addition, emptying the system when installing and replacing the temperature probe at the end of the calibration period is no longer necessary.

The temperature probes are also available in paired and conformity-assessed versions. The officially recognized test facility for heat KHE2 is available for this purpose. Production has been certified according to Annex D of Directive 2014/32/EU and Annex 4 Module D of the German Weights and Measures Act.

The following specifications apply for Germany according to the technical directives TR-K8 and TR-K9: For heat/cold meters with nominal flow rates ≤ qp 6 m^3/h the temperature probe must only be installed with direct immersion when newly installing the section of the pipeline in the measuring point area with nominal pressures ≤ 16 bar. Tolerances apply for existing immersion sleeves.

Technical data

Connection	Ferrules
Connecting cable	PVC, PUR, TPE, silicone; unshielded or shielded
Process connection	Type DS: screw connection M10 × 1, brass according to DIN EN 1434 Type DL: thread G 1/4, G 1/2 stainless steel
Protection tube	Type DS: stainless steel Ø 5.4 mm stepped down to Ø 3.3 mm or Ø 3.6 mm Type DL: stainless steel Ø 8 mm stepped down to Ø 6 mm
Measuring insert	Platinum temperature sensor according to DIN EN 60751 Nominal value: Pt100, Pt500, or Pt1000 Connection: two-wire or four-wire circuit
Temperature	0 to 120 °C (cold) 0 to 180 °C (heat)
Temperature difference	3 to 120 K (cold) 3 to 180 K (heat)
Minimum immersion depth	Type DS: 15 mm Type DL: 30 mm
Insertion length	Type DS: 25 to 60 mm Type DL: 60 to 280 mm
Maximum pressure	PS 25
Flow velocity	2 m/s (water)
Response	Type DS: $t_{0.5}$ = 2 s Type DL: $t_{0.5}$ = 6 s
Thermoelectric voltage	≤ 5 µV
Environmental influences	Climatic 5 to 55 °C Protection type IP65 Mechanical M3

JUMO GmbH & Co. KG
Delivery address: Mackenrodtstraße 14
36039 Fulda, Germany
Postal address: 36035 Fulda, Germany
Phone: +49 661 6003-0
Fax: +49 661 6003-607
Email: mail@jumo.net
Internet: www.jumo.net

JUMO Instrument Co. Ltd.
JUMO House
Temple Bank, Riverway
Harlow, Essex, CM20 2DY, UK
Phone: +44 1279 63 55 33
Fax: +44 1279 62 50 29
Email: sales@jumo.co.uk
Internet: www.jumo.co.uk

JUMO Process Control, Inc.
6733 Myers Road
East Syracuse, NY 13057, USA
Phone: +1 315 437 5866
Fax: +1 315 437 5860
Email: info.us@jumo.net
Internet: www.jumousa.com

Connecting cable lengths according to DIN EN 1434

Conductor cross section	Max. connecting cable length AL for Pt100	Max. connecting cable length AL for Pt500	Max. connecting cable length AL for Pt1000
0.22 mm^2	2500 mm	12500 mm	25000 mm
0.34 mm^2	3500 mm	17500 mm	35000 mm
0.50 mm^2	5000 mm	25000 mm	50000 mm

Important information:
The possible limitation of the connecting cable length due to the type examination certificate of the ALU/meter should also be taken into account. For four-wire circuits, the max. connecting cable lengths are limited by the requirements of the ALU/meter.

Overview of approvals

Version	Basic type	Type examination certificate	
		Type	Number
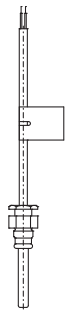	902455/50 (DS)	Weights and Measures Act (Germany, cold) Weights and Measurement Act (Austria, cold)	DE-15-M-PTB-0052 (Germany) OE16/C400 (Austria)
	DS = Direct short (short temperature probe, without immersion sleeve)		
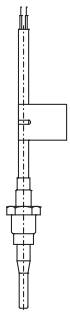	902455/20 (DS) 902455/70 (DS)	Weights and Measures Act (Germany, cold)	DE-15-M-PTB-0052 (Germany)
	DS = Direct short (short temperature probe, without immersion sleeve)		
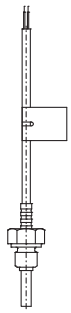	902455/30 (DL) 902455/40 (DL)	Weights and Measures Act (Germany, cold)	DE-15-M-PTB-0050 (150 °C)
	DL = Direct long (long temperature probe, without immersion sleeve)		

JUMO GmbH & Co. KG
Delivery address: Mackenrodtstraße 14
36039 Fulda, Germany
Postal address: 36035 Fulda, Germany
Phone: +49 661 6003-0
Fax: +49 661 6003-607
Email: mail@jumo.net
Internet: www.jumo.net

JUMO Instrument Co. Ltd.
JUMO House
Temple Bank, Riverway
Harlow, Essex, CM20 2DY, UK
Phone: +44 1279 63 55 33
Fax: +44 1279 62 50 29
Email: sales@jumo.co.uk
Internet: www.jumo.co.uk

JUMO Process Control, Inc.
6733 Myers Road
East Syracuse, NY 13057, USA
Phone: +1 315 437 5866
Fax: +1 315 437 5860
Email: info.us@jumo.net
Internet: www.jumousa.com

Dimensions

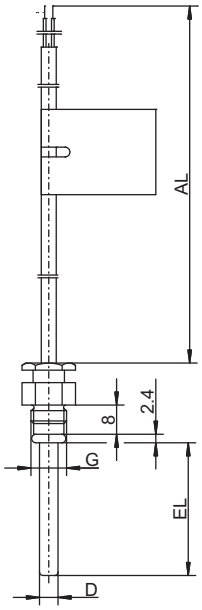

Basic type 902455/50 (DS)

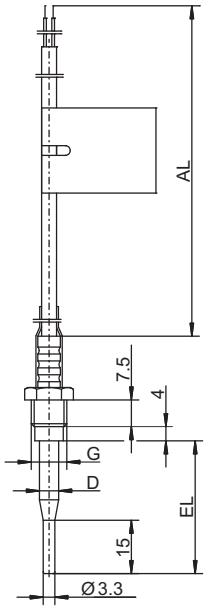

Basic type 902455/20 (DS)

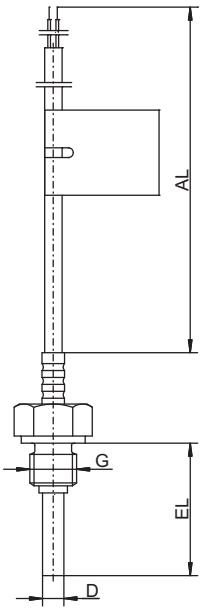

Basic type 902455/30 (DL)

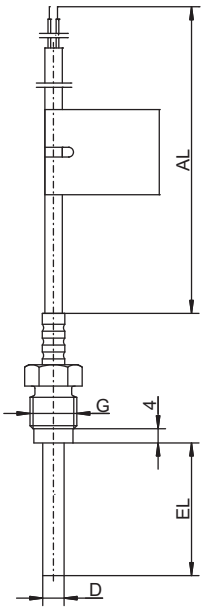

Basic type 902455/40 (DL)

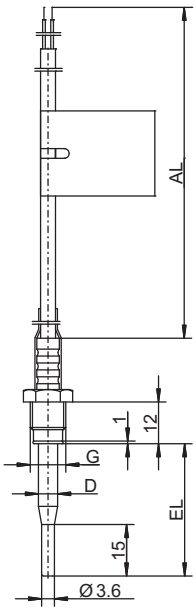

Basic type 902455/70 (DS)

JUMO GmbH & Co. KG
Delivery address: Mackenrodtstraße 14
36039 Fulda, Germany
Postal address: 36035 Fulda, Germany
Phone: +49 661 6003-0
Fax: +49 661 6003-607
Email: mail@jumo.net
Internet: www.jumo.net

JUMO Instrument Co. Ltd.
JUMO House
Temple Bank, Riverway
Harlow, Essex, CM20 2DY, UK
Phone: +44 1279 63 55 33
Fax: +44 1279 62 50 29
Email: sales@jumo.co.uk
Internet: www.jumo.co.uk

JUMO Process Control, Inc.
6733 Myers Road
East Syracuse, NY 13057, USA
Phone: +1 315 437 5866
Fax: +1 315 437 5860
Email: info.us@jumo.net
Internet: www.jumousa.com

Order details: Combined cold/heat meter RTD temperature probe with connecting cable

				(1) Basic type
			902455/50	Screw-in RTD temperature probe for direct mounting (DS) with loose screw connection and smooth protection tube
			902455/20	Screw-in RTD temperature probe for direct mounting (DS) with loose screw connection and offset protection tube
			902455/70	Screw-in RTD temperature probe for direct mounting (DS) with loose screw connection and offset protection tube
				(2) Operating temperature in °C
x	x	x	815	0 to 105 °C/TPE (only in two-wire circuit)
x	x	x	824	0 to 150 °C/silicone
				(3) Measuring insert
x	x	x	1003	1× Pt100 in two-wire circuit
x	x	x	1004	1× Pt500 in two-wire circuit
x	x	x	1005	1× Pt1000 in two-wire circuit
x	x	x	1011	1× Pt100 in four-wire circuit
x	x	x	1012	1× Pt500 in four-wire circuit
x	x	x	1013	1× Pt1000 in four-wire circuit
				(4) Tolerance class according to DIN EN 60751
x	x	x	1	Class B (standard)
	x		2	Class A
	x		3	Class AA
				(5) Protection tube diameter D in mm
x			5	Ø 5 mm
x			5.2	Ø 5.2 mm
	x		5.4	Ø 5.4 mm stepped down to Ø 3.3 mm
		x	5.4	Ø 5.4 mm stepped down to Ø 3.6 mm
				(6) Insertion length EL in mm (25 to 60 mm)
x			26	26 mm
	x	x	27.5	27.5 mm
	x	x	38	38 mm
		x	60	60 mm
x	x		. . .	Specifications in plain text
				(7) Process connection G
x	x	x	114	Screw connection M10 × 1
				(8) Connecting cable end
x	x	x	04	Tin-plated connection strands (only for temperature probes permanently connected to the ALU)
x	x	x	11	Ferrules according to DIN 46228 Part 4 (standard)
				(9) Connecting cable length AL in mm (> 500 mm)
x	x	x	1500	1500 mm
x	x	x	2500	2500 mm (standard)
x	x	x	. . .	Specifications in plain text (increments of 500 mm)
				(10) Extra codes
x	x	x	000	None
x	x	x	317	Shielded connecting cable
x	x	x	340	Paired according to DIN EN 1434[a]
x	x	x	341	Paired according to DIN EN 1434 with conformity assessment/identification marking according to MessEG[a] (cold, Germany)
x	x	x	670	Paired according to DIN EN 1434 with identification marking according to MEG[a] (cold, Austria)
x	x	x	761	Paired according to DIN EN 1434 with conformity assessment/identification marking according to MID[a] (heat)

[a] Price for pairing depends on number of units; cost effective from 30 pairs of temperature probes

	(1)		(2)		(3)		(4)		(5)		(6)		(7)		(8)		(9)		(10)	
Order code	[ ]	-	[ ]	-	[ ]	-	[ ]	-	[ ]	-	[ ]	-	[ ]	-	[ ]	-	[ ]	/	[ ],...[a]	
Order example	902455/50	-	824	-	1003	-	1	-	5.2	-	26	-	114	-	11	-	2500	/	341, 761	

[a] List extra codes in sequence and separate using commas.

JUMO GmbH & Co. KG
Delivery address: Mackenrodtstraße 14
36039 Fulda, Germany
Postal address: 36035 Fulda, Germany
Phone: +49 661 6003-0
Fax: +49 661 6003-607
Email: mail@jumo.net
Internet: www.jumo.net

JUMO Instrument Co. Ltd.
JUMO House
Temple Bank, Riverway
Harlow, Essex, CM20 2DY, UK
Phone: +44 1279 63 55 33
Fax: +44 1279 62 50 29
Email: sales@jumo.co.uk
Internet: www.jumo.co.uk

JUMO Process Control, Inc.
6733 Myers Road
East Syracuse, NY 13057, USA
Phone: +1 315 437 5866
Fax: +1 315 437 5860
Email: info.us@jumo.net
Internet: www.jumousa.com

Order details: Combined cold/heat meter RTD temperature probe with connecting cable

			(1)	**Basic type**
		902455/30		Screw-in RTD temperature probe for direct mounting (DL) with fixed fitting and smooth protection tube
		902455/40		Screw-in RTD temperature probe for direct mounting (DL) with flange and loose screw connection and smooth protection tube
			(2)	**Operating temperature in °C**
x	x	824		0 to 150 °C/silicone
			(3)	**Measuring insert**
x	x	1003		1× Pt100 in two-wire circuit
x	x	1004		1× Pt500 in two-wire circuit
x	x	1005		1× Pt1000 in two-wire circuit
x	x	1011		1× Pt100 in four-wire circuit
x	x	1012		1× Pt500 in four-wire circuit
x	x	1013		1× Pt1000 in four-wire circuit
			(4)	**Tolerance class according to DIN EN 60751**
x	x	1		Class B (standard)
x	x	2		Class A
x	x	3		Class AA
			(5)	**Protection tube diameter D in mm**
x	x	6		Ø 6 mm
x	x	8		Ø 8 mm stepped down to Ø 6 mm
			(6)	**Insertion length EL in mm (60 to 210 mm)**
x	x	85		85 mm
	x	91		91 mm
x	x	120		120 mm
	x	146		146 mm
x		210		210 mm (only for Ø 8 mm stepped down to Ø 6 mm)
x	x	...		Specifications in plain text
			(7)	**Process connection G**
x	x	102		Screw connection G 1/4
x		104		Screw connection G 1/2
x	x	. . .		Specifications in plain text
			(8)	**Connecting cable end**
x	x	04		Tin-plated connection strands (only for temperature probes permanently connected to the ALU)
x	x	11		Ferrules according to DIN 46228 Part 4 (standard)
			(9)	**Connecting cable length AL in mm (> 500 mm)**
x	x	1500		1500 mm
x	x	2500		2500 mm (standard)
x	x	. . .		Specifications in plain text (increments of 500 mm)
			(10)	**Extra codes**
x	x	000		None
x	x	317		Shielded connecting cable
x	x	340		Paired according to DIN EN 1434[a]
x	x	341		Paired according to DIN EN 1434 with conformity assessment/identification marking according to MessEG[a] (cold, Germany)
x	x	761		Paired according to DIN EN 1434 with conformity assessment/identification marking according to MID[a] (heat)

[a] Price for pairing depends on number of units; cost effective from 30 pairs of temperature probes

	(1)		(2)		(3)		(4)		(5)		(6)		(7)		(8)		(9)		(10)	
Order code	[ ]	-	[ ]	-	[ ]	-	[ ]	-	[ ]	-	[ ]	-	[ ]	-	[ ]	-	[ ]	/	[ ],...[a]	
Order example	902455/30	-	824	-	1003	-	1	-	6	-	120	-	104	-	11	-	2500	/	341,761	

[a] List extra codes in sequence and separate using commas.

JUMO GmbH & Co. KG
Delivery address: Mackenrodtstraße 14
36039 Fulda, Germany
Postal address: 36035 Fulda, Germany
Phone: +49 661 6003-0
Fax: +49 661 6003-607
Email: mail@jumo.net
Internet: www.jumo.net

JUMO Instrument Co. Ltd.
JUMO House
Temple Bank, Riverway
Harlow, Essex, CM20 2DY, UK
Phone: +44 1279 63 55 33
Fax: +44 1279 62 50 29
Email: sales@jumo.co.uk
Internet: www.jumo.co.uk

JUMO Process Control, Inc.
6733 Myers Road
East Syracuse, NY 13057, USA
Phone: +1 315 437 5866
Fax: +1 315 437 5860
Email: info.us@jumo.net
Internet: www.jumousa.com

JUMO HEATtemp

Push-in RTD Temperature Probe for Combined Cold/Heat Meter with Terminal Head for Thermowells (Type PL)

- **For temperatures from 0 to 120 °C (cold) and 0 to 180 °C (heat)**
- **Type examination certificate for cold and combined cold/heat meters**
- **Fulfills the requirements of DIN EN 1434, AGFW FW 202, and FW 211**
- **Pairing and declaration of conformity according to German Weights and Measures Act and according to MID**
- **Production certified according to module D (MID) (CE and metrology identification marking)**
- **Coordinated accessories for installation (data sheet 902440 and 902442)**

Combined cold/heat meter RTD temperature probes are used for temperature measurement in closed pipeline systems. Due to the installation in thermowells with fitting tolerance, the system no longer needs to be emptied during regular replacement once the certification period has elapsed.
The temperature probes are approved according to the EU directive 2014/32/EU (MID) as well as according to the German Weights and Measures Act (domestic approval).
The implementation of the requirements of the European directive 2014/32/EU (MID) and the German Weights and Measures Act (MessEG) ensures that our temperature probe pairs can be used as a sub-assembly for combined cold/heat meters when operated in line with their intended use.
As the manufacturer, we declare the conformity of these temperature probe pairs where necessary.

Technical data

Terminal head	Form B, aluminum die-cast, M24 × 1.5, IP65, ambient temperature -20 to +100 °C
Process connection	Push-in RTD temperature probe for thermowells
Protection tube	Stainless steel, Ø 6 mm with fitting tolerance for thermowell
Measuring insert	Platinum temperature sensor according to DIN EN 60751 Nominal value: Pt100, Pt500, Pt1000 Connection: two-wire or four-wire circuit
Temperature	0 to 120 °C (cold) 0 to 180 °C (heat)
Temperature difference	3 to 120 K (cold) 3 to 180 K (heat)
Minimum immersion depth	25 mm
Insertion length	85 to 400 mm
Maximum pressure	40 bar (with thermowell)
Flow velocity	2 m/s (water)
Response	$t_{0.5} \leq 12$ s (direct mounting)
Thermoelectric voltage	≤ 5 µV
Environmental influences	Climatic 5 to 55 °C Protection type IP65 Mechanical M3

JUMO GmbH & Co. KG
Delivery address: Mackenrodtstraße 14
36039 Fulda, Germany
Postal address: 36035 Fulda, Germany
Phone: +49 661 6003-0
Fax: +49 661 6003-607
Email: mail@jumo.net
Internet: www.jumo.net

JUMO Instrument Co. Ltd.
JUMO House
Temple Bank, Riverway
Harlow, Essex, CM20 2DY, UK
Phone: +44 1279 63 55 33
Fax: +44 1279 62 50 29
Email: sales@jumo.co.uk
Internet: www.jumo.co.uk

JUMO Process Control, Inc.
6733 Myers Road
East Syracuse, NY 13057, USA
Phone: +1 315 437 5866
Fax: +1 315 437 5860
Email: info.us@jumo.net
Internet: www.jumousa.com

Dimensions

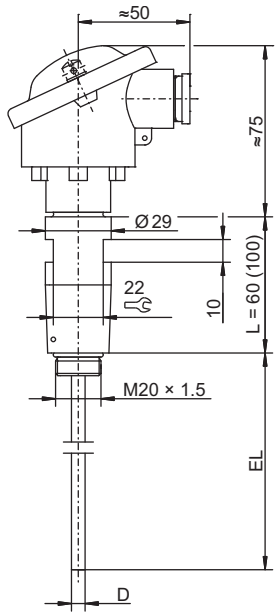

Basic type 902464/10 (PL)

Overview of approvals

Basic type	Type examination certificate	
	Type	**Number**
902464/10	Domestic (Germany; cold)	DE-15-M-PTB-0051

JUMO GmbH & Co. KG
Delivery address: Mackenrodtstraße 14
36039 Fulda, Germany
Postal address: 36035 Fulda, Germany
Phone: +49 661 6003-0
Fax: +49 661 6003-607
Email: mail@jumo.net
Internet: www.jumo.net

JUMO Instrument Co. Ltd.
JUMO House
Temple Bank, Riverway
Harlow, Essex, CM20 2DY, UK
Phone: +44 1279 63 55 33
Fax: +44 1279 62 50 29
Email: sales@jumo.co.uk
Internet: www.jumo.co.uk

JUMO Process Control, Inc.
6733 Myers Road
East Syracuse, NY 13057, USA
Phone: +1 315 437 5866
Fax: +1 315 437 5860
Email: info.us@jumo.net
Internet: www.jumousa.com

Order details: Combined cold/heat meter RTD temperature probe with terminal head

		(1)	**Basic type**
	902464/10		Push-in RTD temperature probe with terminal head form B (standard) and continuous protection tube, design type PL
		(2)	**Operating temperature in °C**
x	818		0 to 120 °C
x	830		0 to 180 °C
		(3)	**Measuring insert**
x	1003		1 × Pt100 in two-wire circuit
x	1004		1 × Pt500 in two-wire circuit
x	1005		1 × Pt1000 in two-wire circuit
x	1011		1 × Pt100 in four-wire circuit
x	1012		1 × Pt500 in four-wire circuit
x	1013		1 × Pt1000 in four-wire circuit
		(4)	**Tolerance class according to DIN EN 60751**
x	1		Class B (standard)
x	2		Class A
x	3		Class AA
		(5)	**Protection tube diameter D in mm**
x	6		Ø 6 mm (tolerance according to DIN EN 1434-2)
		(6)	**Insertion length EL in mm (85 to 400 mm)**
x	105		105 mm
x	140		140 mm
x	230		230 mm
x	400		400 mm
x	. . .		Specifications in plain text
		(7)	**Extra codes**
x	000		None
x	340		Paired according to DIN EN 1434[a]
x	341		Paired according to DIN EN 1434 with conformity assessment/identification marking according to MessEG[a] (cold, Germany)
x	761		Paired according to DIN EN 1434 with conformity assessment/identification marking according to MID[a] (heat)

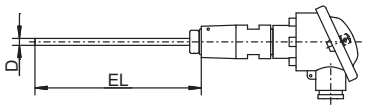

[a] Price for pairing depends on number of units; cost effective from 30 pairs of temperature probes

	(1)		(2)		(3)		(4)		(5)		(6)		(7)
Order code	[ ]	-	[ ]	-	[ ]	-	[ ]	-	[ ]	-	[ ]	/	[ ], ...[a]
Order example	902464/10	-	818	-	1003	-	1	-	6	-	105	/	341,761

[a] List extra codes in sequence and separate using commas.

Important information:
Thermowells, data sheet 902440
Terminal heads, data sheet 909715

JUMO GmbH & Co. KG
Delivery address: Mackenrodtstraße 14
36039 Fulda, Germany
Postal address: 36035 Fulda, Germany
Phone: +49 661 6003-0
Fax: +49 661 6003-607
Email: mail@jumo.net
Internet: www.jumo.net

JUMO Instrument Co. Ltd.
JUMO House
Temple Bank, Riverway
Harlow, Essex CM 20 2DY, UK
Phone: +44 1279 63 55 33
Fax: +44 1279 62 50 29
Email: sales@jumo.co.uk
Internet: www.jumo.co.uk

JUMO Process Control, Inc.
6733 Myers Road
East Syracuse, NY 13057, USA
Phone: +1 315 437 5866
Fax: +1 315 437 5860
Email: info.us@jumo.net
Internet: www.jumousa.com

Indoor, Outdoor, and Channel RTD Temperature Probes

- For temperatures from -50 to +200 °C
- For use in air-conditioning technology
- Protection type IP20 to IP65
- Connection available in two-wire, three-wire, or four-wire circuit
- Available with analog transmitter

Indoor, outdoor, and channel RTD temperature probes for air-conditioning technology are mainly used for temperature measurement in rooms, in air channels, and outdoors.

Various device versions made of plastic with different protection types are available for the respective measuring task.

The measuring insert is fitted as standard with a Pt100 temperature sensor according to DIN EN 60751, class B in a two-wire circuit; versions with Pt500, Pt1000, Ni1000, and various NTCs are also available. From the connection terminals, wiring in a three-wire and four-wire circuit is also possible.
A transmitter can be integrated as an option.

Technical data

Cable socket	Plastic housing PC (basic type 902520/11, material PP), protection type IP20 to IP65, basic type 902524/25 protection type IP54 and IP65
Protection tube	Stainless steel 1.4571; dia. 6 mm
Measuring insert	Pt100 temperature sensor, DIN EN 60751, class B, two-wire circuit Pt1000 temperature sensor, DIN EN 60751, class B, two-wire circuit, Please see the order details for further options
Transmitter	Analog transmitter, output signal 4 to 20 mA or 0 to 10 V

Approvals / approval marks (see "Technical data")

JUMO GmbH & Co. KG
Delivery address: Mackenrodtstraße 14
36039 Fulda, Germany
Postal address: 36035 Fulda, Germany
Phone: +49 661 6003-0
Fax: +49 661 6003-607
Email: mail@jumo.net
Internet: www.jumo.net

JUMO Instrument Co. Ltd.
JUMO House
Temple Bank, Riverway
Harlow, Essex CM 20 2DY, UK
Phone: +44 1279 63 55 33
Fax: +44 1279 62 50 29
Email: sales@jumo.co.uk
Internet: www.jumo.co.uk

JUMO Process Control, Inc.
6733 Myers Road
East Syracuse, NY 13057, USA
Phone: +1 315 437 5866
Fax: +1 315 437 5860
Email: info.us@jumo.net
Internet: www.jumousa.com

Transmitter

	Output 4 to 20 mA	Output 0 to 10 V
Input		
Measurement input	Pt100 (DIN EN 60751)	Pt100 (DIN EN 60751)
Sensor current	≤ 0.5 mA	≤ 0.5 mA
Sampling rate	Permanent measurement due to analog signal path	Permanent measurement due to analog signal path
Measuring circuit monitoring		
Underrange	Dropping to ≤ 3.6 mA	0 V
Overrange	Increasing to ≥ 22 to < 28 mA (typical 24 mA)	Increasing to ≥ 11 to < 14 V (typical 12 V)
Probe short circuit	≤ 3.6 mA	0 V
Probe/cable break	≥ 22 to < 28 mA (typical 24 mA)	≥ 11 to < 14 V (typical 12 V)
Output		
Output signal	Load-independent direct current: 4 to 20 mA	Direct voltage: 0 to 10 V
Transmission behavior	Temperature-linear	Temperature-linear
Transmission accuracy	≤ ±0.1 %	≤ ±0.2 %
Attenuation of the residual ripple of a voltage supply of 24 V, amplitude 10 V/50 Hz, burden 470 Ω/load 10 MΩ	37 dB	40 dB
Burden (Rb)	Rb = (Ub - 7.5 V) ÷ 22 mA	-
Burden influence	≤ ±0.02 %/100 Ω[a]	-
Load / load influence	-	≥ 10 kΩ/≤ ±0.1 %
Setting time for temperature changes	≤ 10 ms	≤ 10 ms
Calibration conditions	DC 24 V/approx. 22 °C	DC 24 V/approx. 22 °C
Calibration accuracy	≤ ±0.2 %[a,b] or ≤ ±0.2 K	≤ ±0.2 %[a,b] or ≤ ±0.2 K
Overall accuracy, sensor/calibration	±0.4 K (typical) at 20 °C/24 V voltage supply	±0.4 K (typical) at 20 °C/24 V voltage supply
Voltage supply		
Voltage supply (Ub)	DC 7.5 to 30 V	DC 15 to 30 V
Reverse voltage protection	Yes	Yes
Voltage supply influence	≤ ±0.01 %/V deviation from 24 V[a]	≤ ±0.01 %/V deviation from 24 V[a]
Environmental influences		
Operating temperature range	-40 to +85 °C	-40 to +85 °C
Storage temperature range	-40 to +100 °C	-40 to +100 °C
Temperature influence	≤ ±0.01 %/K deviation from 22 °C[a]	≤ ±0.01 %/K deviation from 22 °C[a]
Resistance to climatic conditions similar to DIN EN 60654 class C1	Relative humidity ≤ 95 % annual average, no condensation	Relative humidity ≤ 95 % annual average, no condensation
EMC interference emission/immunity	EN 61326 class B, industrial requirements	EN 61326 class B, industrial requirements

[a] All specifications refer to the measuring range end value of 20 mA.
[b] The higher value is valid.

Approvals / approval marks

Approval mark	Test facility	Certificate / certification number	Inspection basis	Valid for
SIL QUALIFIED PL QUALIFIED	-	-	-	Extra code 058 in conjunction with declaration of manufacturer

JUMO GmbH & Co. KG
Delivery address: Mackenrodtstraße 14
36039 Fulda, Germany
Postal address: 36035 Fulda, Germany
Phone: +49 661 6003-0
Fax: +49 661 6003-607
Email: mail@jumo.net
Internet: www.jumo.net

JUMO Instrument Co. Ltd.
JUMO House
Temple Bank, Riverway
Harlow, Essex CM 20 2DY, UK
Phone: +44 1279 63 55 33
Fax: +44 1279 62 50 29
Email: sales@jumo.co.uk
Internet: www.jumo.co.uk

JUMO Process Control, Inc.
6733 Myers Road
East Syracuse, NY 13057, USA
Phone: +1 315 437 5866
Fax: +1 315 437 5860
Email: info.us@jumo.net
Internet: www.jumousa.com

Connection diagram

Standard versions

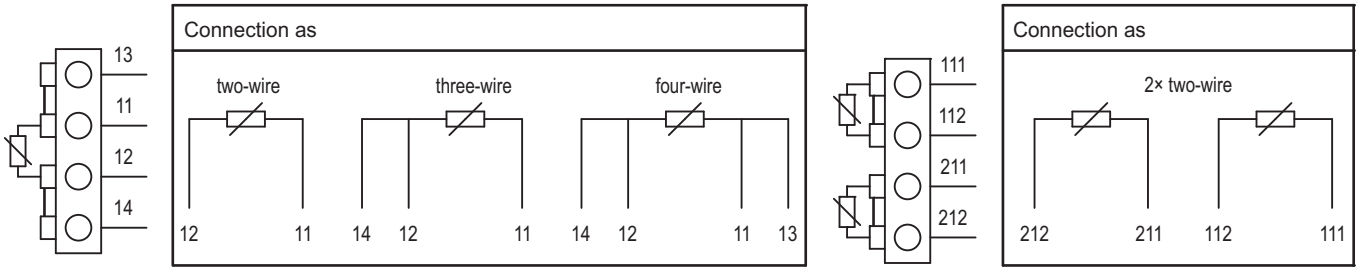

Transmitter for basic type 902520/10

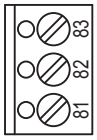

Output 4 to 20 mA

Connection for		Terminal assignment		
	Voltage supply DC 7.5 to 30 V	+ 81	$R_B = \frac{U_b - 7.5\ V}{22\ mA}$	81 82 + -
	Current output 4 to 20 mA	- 82	R_B = Burden resistance U_b = Voltage supply	

Output 0 to 10 V

Connection for		Terminal assignment		
	Voltage supply DC 15 to 30 V	+ 81 - 82	Load ≥ 10 kΩ	81 82 83 + - +
	Voltage output 0 to 10 V	- 82 + 83		

Transmitter for basic types 902520/2x and 902524/3x

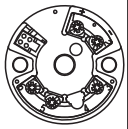

Output 4 to 20 mA

Connection for		Terminal assignment		
	Voltage supply DC 7.5 to 30 V	+ 1 - 2	$R_B = \frac{U_b - 7.5\ V}{22\ mA}$	1 2 + -
	Current output 4 to 20 mA		R_B = Burden resistance U_b = Voltage supply	

Output 0 to 10 V

Connection for		Terminal assignment		
	Voltage supply DC 15 to 30 V	+ 1 - 2	Load ≥ 10 kΩ	1 2 3 + - +
	Voltage output 0 to 10 V	- 2 + 3		

Connection examples

Connection example with power supply unit, output 4 to 20 mA

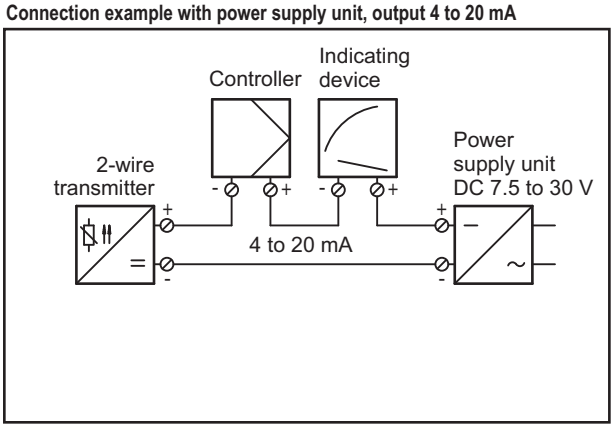

Connection example with power supply unit, output 0 to 10 V

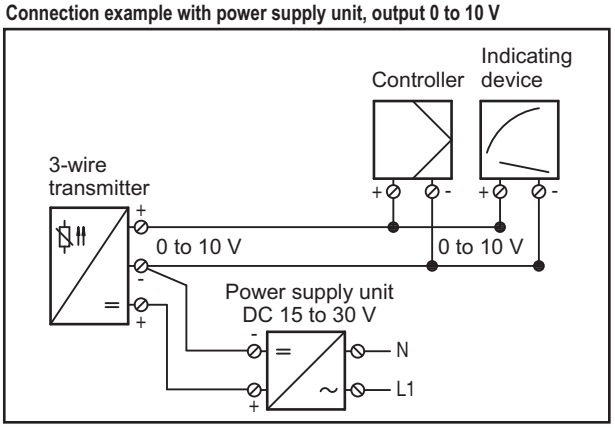

JUMO GmbH & Co. KG
Delivery address: Mackenrodtstraße 14
36039 Fulda, Germany
Postal address: 36035 Fulda, Germany
Phone: +49 661 6003-0
Fax: +49 661 6003-607
Email: mail@jumo.net
Internet: www.jumo.net

JUMO Instrument Co. Ltd.
JUMO House
Temple Bank, Riverway
Harlow, Essex CM 20 2DY, UK
Phone: +44 1279 63 55 33
Fax: +44 1279 62 50 29
Email: sales@jumo.co.uk
Internet: www.jumo.co.uk

JUMO Process Control, Inc.
6733 Myers Road
East Syracuse, NY 13057, USA
Phone: +1 315 437 5866
Fax: +1 315 437 5860
Email: info.us@jumo.net
Internet: www.jumousa.com

Dimensions

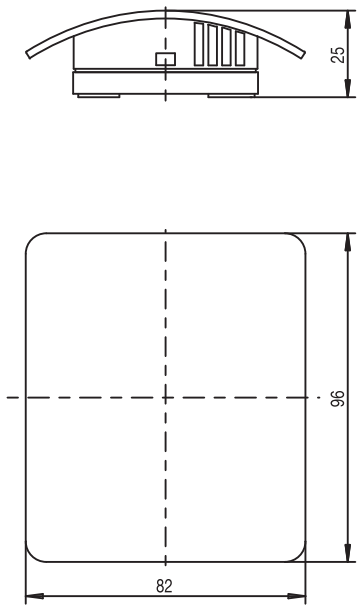

Basic type 902520/10

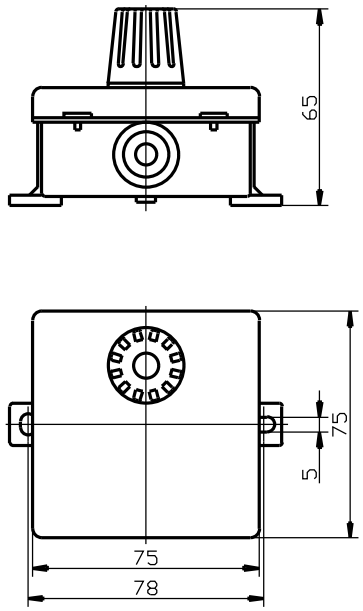

Basic type 902520/11

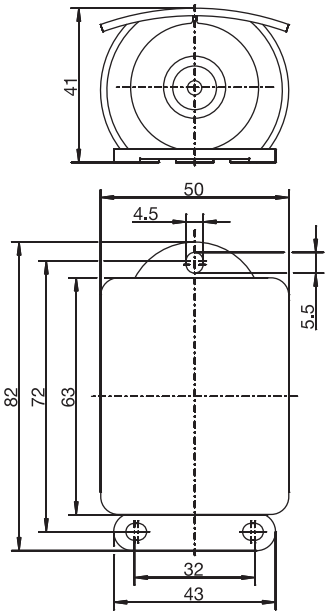

Basic type 902520/15

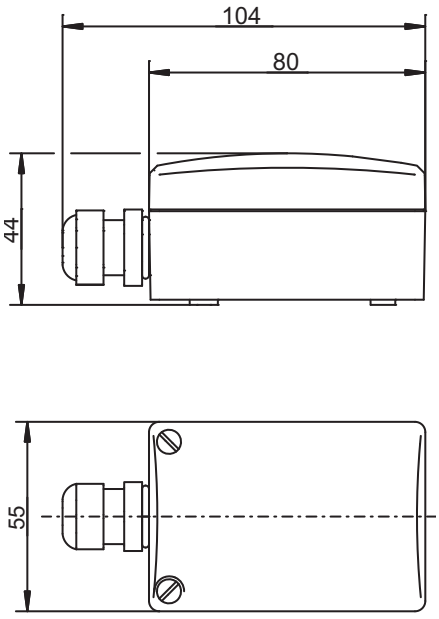

Basic type 902520/21

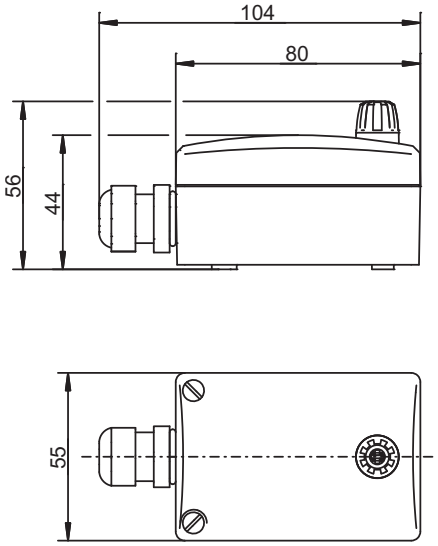

Basic type 902520/22

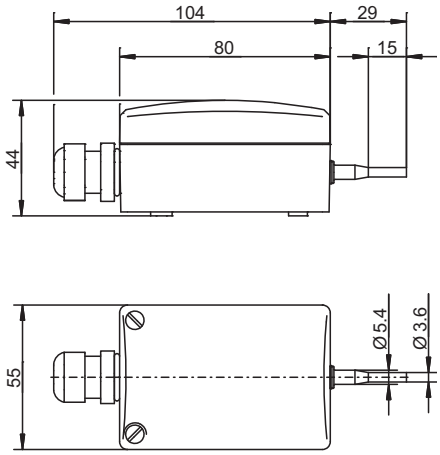

Basic type 902520/23

JUMO GmbH & Co. KG
Delivery address: Mackenrodtstraße 14
36039 Fulda, Germany
Postal address: 36035 Fulda, Germany
Phone: +49 661 6003-0
Fax: +49 661 6003-607
Email: mail@jumo.net
Internet: www.jumo.net

JUMO Instrument Co. Ltd.
JUMO House
Temple Bank, Riverway
Harlow, Essex CM 20 2DY, UK
Phone: +44 1279 63 55 33
Fax: +44 1279 62 50 29
Email: sales@jumo.co.uk
Internet: www.jumo.co.uk

JUMO Process Control, Inc.
6733 Myers Road
East Syracuse, NY 13057, USA
Phone: +1 315 437 5866
Fax: +1 315 437 5860
Email: info.us@jumo.net
Internet: www.jumousa.com

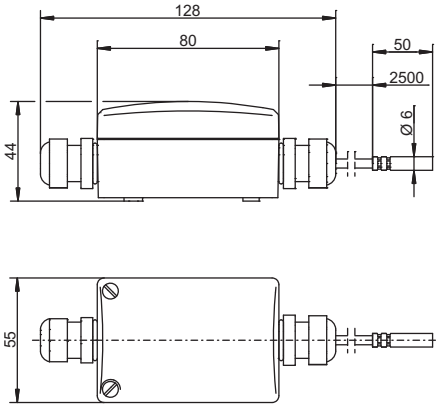

Basic type 902520/24

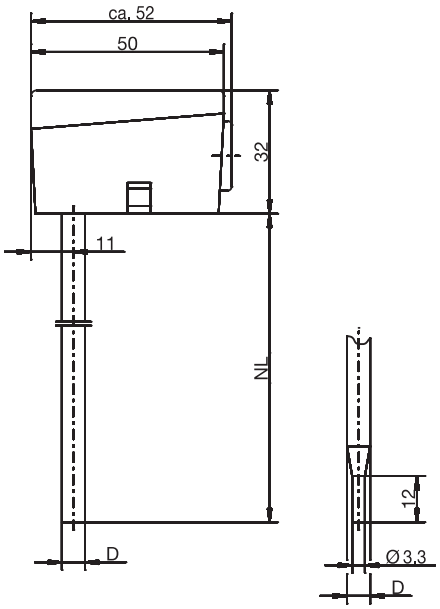

Basic type 902524/25

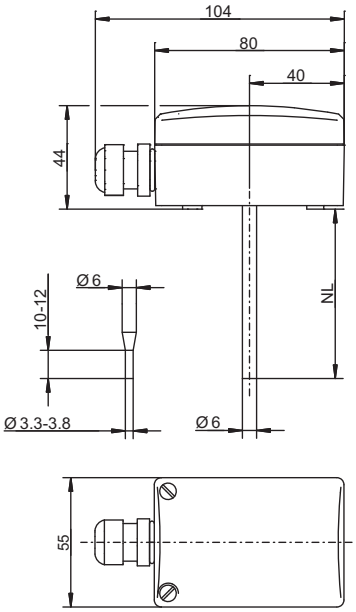

Basic type 902524/31

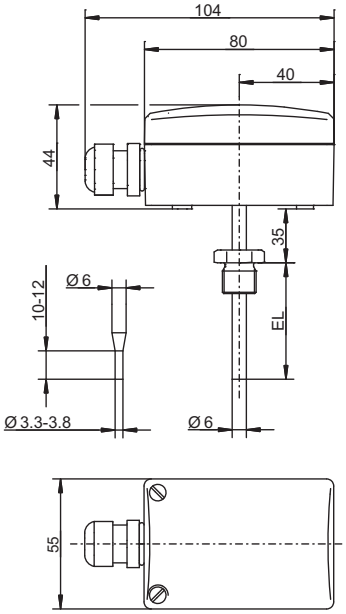

Basic type 902524/32

JUMO GmbH & Co. KG
Delivery address: Mackenrodtstraße 14
36039 Fulda, Germany
Postal address: 36035 Fulda, Germany
Phone: +49 661 6003-0
Fax: +49 661 6003-607
Email: mail@jumo.net
Internet: www.jumo.net

JUMO Instrument Co. Ltd.
JUMO House
Temple Bank, Riverway
Harlow, Essex CM 20 2DY, UK
Phone: +44 1279 63 55 33
Fax: +44 1279 62 50 29
Email: sales@jumo.co.uk
Internet: www.jumo.co.uk

JUMO Process Control, Inc.
6733 Myers Road
East Syracuse, NY 13057, USA
Phone: +1 315 437 5866
Fax: +1 315 437 5860
Email: info.us@jumo.net
Internet: www.jumousa.com

Order details

Indoor and outdoor RTD temperature probe

				(1)	**Basic type**
			902520/10		Indoor RTD temperature probe Protection type IP20
			902520/11		Indoor and outdoor RTD temperature probe Protection type IP54
			902520/15		Outdoor RTD temperature probe Protection type IP65
				(2)	**Operating temperature in °C**
		x	361		-50 to +90 °C
x			572		-30 to +80 °C
	x		635		-20 to +80 °C
x			803		0 to 40 °C (measuring range only in conjunction with transmitter)
x			807		0 to 60 °C (measuring range only in conjunction with transmitter)
				(3)	**Measuring insert**
x			1001		1× Pt100 in three-wire circuit
x	x	x	1003		1× Pt100 in two-wire circuit
x	x	x	1005		1× Pt1000 in two-wire circuit
x	x	x	1009		1× Ni1000 in two-wire circuit
		x	1619		1× KTY 81-110
		x	1728		1× NTC 1 kOhm
x			2001		2× Pt100 in three-wire circuit
	x		2003		2× Pt100 in two-wire circuit
				(4)	**Tolerance class according to DIN EN 60751**
		x	0		Technical data Ni/NTC/KTY
x	x	x	1		Class B (standard)
x		x	2		Class A
x		x	3		Class AA
				(5)	**Extra codes**
x	x	x	000		none
x	x	x	058		SIL and PL-compatible
x			330		1× analog transmitter, output 4 to 20 mA[a] (in conjunction with 1× Pt100), data sheet 707030
x			333		1× analog transmitter, output 0 to 10 V [a] (in conjunction with 1× Pt100), data sheet 707030
		x	903		Cable fitting (IP65)

[a] Specify measuring range in plain text.

	(1)		(2)		(3)		(4)		(5)
Order code		-		-		-		/	,...[a]
Order example	902520/10	-	572	-	1001	-	1	/	000

[a] List extra codes in sequence, separated by commas.

JUMO GmbH & Co. KG
Delivery address: Mackenrodtstraße 14
36039 Fulda, Germany
Postal address: 36035 Fulda, Germany
Phone: +49 661 6003-0
Fax: +49 661 6003-607
Email: mail@jumo.net
Internet: www.jumo.net

JUMO Instrument Co. Ltd.
JUMO House
Temple Bank, Riverway
Harlow, Essex CM 20 2DY, UK
Phone: +44 1279 63 55 33
Fax: +44 1279 62 50 29
Email: sales@jumo.co.uk
Internet: www.jumo.co.uk

JUMO Process Control, Inc.
6733 Myers Road
East Syracuse, NY 13057, USA
Phone: +1 315 437 5866
Fax: +1 315 437 5860
Email: info.us@jumo.net
Internet: www.jumousa.com

Wall RTD temperature probe

					(1)	**Basic type**
				902520/21		Wall RTD temperature probe with internal sensor Protection type IP65
				902520/22		Wall RTD temperature probe with outer sensor Protection type IP65
				902520/23		Wall RTD temperature probe with stepped-down protection tube Protection type IP65
				902520/24		Wall RTD temperature probe with push-in RTD temperature probe with 2500 mm PVC connecting cable Protection type IP65
					(2)	**Operating temperature in °C**
x	x	x		361		-50 to +90 °C
x	x	x		474		-40 to +80 °C (measuring range only in conjunction with transmitter)
			x	572		-30 to +80 °C (measuring range only in conjunction with transmitter)
x	x	x	x	573		-30 to +90 °C (standard)
					(3)	**Measuring insert**
x	x	x	x	1003		1× Pt100 in two-wire circuit (standard)
x	x	x	x	1005		1× Pt1000 in two-wire circuit
x	x	x	x	1009		1× Ni1000 in two-wire circuit (TK 6180 ppm/K)
x	x		x	1619		1× KTY 81-110
x	x		x	1654		1× LM235 Z
x	x	x	x	1728		1× NTC 1 kOhm
x	x	x	x	2003		2× Pt100 in two-wire circuit
x	x	x	x	2005		2× Pt1000 in two-wire circuit
x	x		x	2009		2× Ni1000 in two-wire circuit (TK 6180 ppm/K)
					(4)	**Tolerance class according to DIN EN 60751**
x	x	x	x	0		Technical data Ni/NTC/KTY/LM235 Z
x	x	x	x	1		Class B (standard)
x	x	x	x	2		Class A
x	x	x	x	3		Class AA
					(5)	**Extra codes**
x	x	x	x	000		none
x	x	x	x	058		SIL and PL-compatible
x	x	x	x	242		Spring-cage terminal
x	x	x	x	330		1× analog transmitter, output 4 to 20 mA[a] (in conjunction with 1× Pt100), data sheet 707030
x	x	x	x	333		1× analog transmitter, output 0 to 10 V[a] (in conjunction with 1× Pt100), data sheet 707030

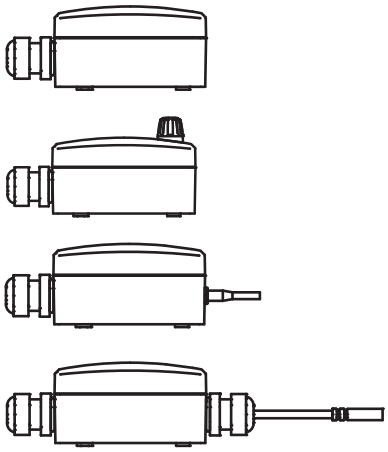

[a] Specify measuring range (deviating measuring range) in plain text.

	(1)		(2)		(3)		(4)		(5)
Order code		-		-		-		/	
Order example	902520/21	-	573	-	1003	-	1	/	000

JUMO GmbH & Co. KG
Delivery address: Mackenrodtstraße 14
36039 Fulda, Germany
Postal address: 36035 Fulda, Germany
Phone: +49 661 6003-0
Fax: +49 661 6003-607
Email: mail@jumo.net
Internet: www.jumo.net

JUMO Instrument Co. Ltd.
JUMO House
Temple Bank, Riverway
Harlow, Essex CM 20 2DY, UK
Phone: +44 1279 63 55 33
Fax: +44 1279 62 50 29
Email: sales@jumo.co.uk
Internet: www.jumo.co.uk

JUMO Process Control, Inc.
6733 Myers Road
East Syracuse, NY 13057, USA
Phone: +1 315 437 5866
Fax: +1 315 437 5860
Email: info.us@jumo.net
Internet: www.jumousa.com

Channel RTD temperature probe

		(1)	**Basic type**
	902524/25		Plug-in channel RTD temperature probe with smooth protection tube Protection type IP54
		(2)	**Operating temperature in °C**
x	380		-50 to +200 °C
		(3)	**Measuring insert**
x	1003		1× Pt100 in two-wire circuit (standard)
x	1005		1× Pt1000 in two-wire circuit
x	1009		1× Ni1000 in two-wire circuit
		(4)	**Tolerance class according to DIN EN 60751**
x	1		Class B (standard)
x	2		Class A
		(5)	**Protection tube diameter D in mm**
x	6		Dia. 6 mm
		(6)	**Nominal length NL in mm (NL 50 to 500)**
x	100		100 mm
x	150		150 mm
x	200		200 mm
x	...		Please specify in plain text (50 mm increments)
		(7)	**Process connection[a]**
x	000		none
		(8)	**Extra codes**
x	000		none
x	058		SIL and PL-compatible
x	310		Protection tube stepped down from dia. 6 mm to dia. 3.3 mm
x	404		Protection type IP65

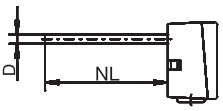

[a] Process connections can be found in the "Accessories for process connection" section.

	(1)		(2)		(3)		(4)		(5)		(6)		(7)		(8)	
Order code	[ ]	-	[ ]	-	[ ]	-	[ ]	-	[ ]	-	[ ]	-	[ ]	/	[ ]	,...[a]
Order example	902524/25	-	380	-	1003	-	1	-	6	-	100	-	000	/	000	

[a] List extra codes in sequence, separated by commas.

JUMO GmbH & Co. KG
Delivery address: Mackenrodtstraße 14
36039 Fulda, Germany
Postal address: 36035 Fulda, Germany
Phone: +49 661 6003-0
Fax: +49 661 6003-607
Email: mail@jumo.net
Internet: www.jumo.net

JUMO Instrument Co. Ltd.
JUMO House
Temple Bank, Riverway
Harlow, Essex CM 20 2DY, UK
Phone: +44 1279 63 55 33
Fax: +44 1279 62 50 29
Email: sales@jumo.co.uk
Internet: www.jumo.co.uk

JUMO Process Control, Inc.
6733 Myers Road
East Syracuse, NY 13057, USA
Phone: +1 315 437 5866
Fax: +1 315 437 5860
Email: info.us@jumo.net
Internet: www.jumousa.com

Channel RTD temperature probe

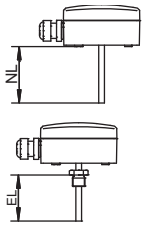

			(1)	**Basic type**
		902524/31		Plug-in channel RTD temperature probe with continuous protection tube, ambient temperature of housing: -30 to +90 °C Protection type IP65
		902524/32		Screw-in channel RTD temperature probe with continuous protection tube, ambient temperature of housing: -30 to +90 °C Protection type IP65
			(2)	**Operating temperature in °C**
x	x	380		-50 to +200 °C
			(3)	**Measuring insert**
x	x	1003		1× Pt100 in two-wire circuit
x	x	1005		1× Pt1000 in two-wire circuit
x	x	1009		1× Ni1000 in two-wire circuit
x	x	1619		1× KTY 81-110
x	x	1654		1× LM235 Z
x	x	1728		1× NTC 1 kOhm
x	x	2003		2× Pt100 in two-wire circuit
x	x	2005		2× Pt1000 in two-wire circuit
x	x	2009		2× Ni1000 in two-wire circuit
			(4)	**Tolerance class according to DIN EN 60751**
x	x	0		Technical data Ni/NTC/KTY/LM235 Z
x	x	1		Class B (standard)
x	x	2		Class A
x	x	3		Class AA
			(5)	**Protection tube diameter D in mm**
x	x	6		Dia. 6 mm
			(6)	**Nominal length NL in mm/insertion length EL in mm (50 to 500 mm)**
x	x	100		100 mm
x	x	150		150 mm
x	x	200		200 mm
x	x	...		Please specify in plain text (50 mm increments)
			(7)	**Process connection**
x		000		none
	x	102		Screw connection G 1/4
	x	103		Screw connection G 3/8
	x	104		Screw connection G 1/2
	x	128		Screw connection M20 × 1.5
	x	144		Screw connection 1/2-14NPT
			(8)	**Extra codes**
x	x	000		none
x	x	058		SIL or PL-compatible
x	x	242		Spring-cage terminal
x	x	310		Protection tube stepped down from dia. 6 mm to dia. 3.3 mm (not in conjunction with measuring insert 2× xxx)
x	x	330		1× analog transmitter, output 4 to 20 mA[a] (in conjunction with 1× Pt100), data sheet 707030
x	x	333		1× analog transmitter, output 0 to 10 V[a] (in conjunction with 1× Pt100), data sheet 707030
x	x	930		Ambient temperature of housing: -50 to +90 °C

[a] Specify measuring range (deviating measuring range) in plain text.

	(1)		(2)		(3)		(4)		(5)		(6)		(7)		(8)	
Order code		-		-		-		-		-		-		/		,...[a]
Order example	902524/31	-	380	-	1003	-	1	-	6	-	100	-	000	/	000	

[a] List extra codes in sequence, separated by commas.

JUMO GmbH & Co. KG
Delivery address: Mackenrodtstraße 14
36039 Fulda, Germany
Postal address: 36035 Fulda, Germany
Phone: +49 661 6003-0
Fax: +49 661 6003-607
Email: mail@jumo.net
Internet: www.jumo.net

JUMO Instrument Co. Ltd.
JUMO House
Temple Bank, Riverway
Harlow, Essex CM 20 2DY, UK
Phone: +44 1279 63 55 33
Fax: +44 1279 62 50 29
Email: sales@jumo.co.uk
Internet: www.jumo.co.uk

JUMO Process Control, Inc.
6733 Myers Road
East Syracuse, NY 13057, USA
Phone: +1 315 437 5866
Fax: +1 315 437 5860
Email: info.us@jumo.net
Internet: www.jumousa.com

Accessories for process connection

Description	Part no.
Stainless steel G 1/4 compression fitting, stainless steel clamping ring for protection tube diameter of 6 mm	00080811
Steel G 3/8 compression fitting, steel clamping ring for protection tube diameter of 6 mm	00057945
Stainless steel G 1/2 compression fitting, stainless steel clamping ring for protection tube diameter of 6 mm	00305445
Stainless steel M10 × 1 compression fitting, stainless steel clamping ring for protection tube diameter of 6 mm	00065416
Stainless steel 1/2-14NPT compression fitting, stainless steel clamping ring for protection tube diameter of 6 mm	00444210
Steel sheet flange for protection tube diameter of 6 mm	00065062

Stock versions

Order code	Part no.
902520/10-572-1001-1/000	00065671
902520/10-572-1005-1/000	00397862
902520/10-803-1003-1/330 (0 to 40 °C)	00064003
902520/10-807-1003-1/330 (0 to 60 °C)	00065717
902520/10-803-1003-1/333 (0 to 40 °C)	00439187
902520/11-635-1003-1/000	00055723
902520/15-361-1003-1/000	00546799
902520/15-361-1005-1/000	00546802
902520/15-361-1003-1/903	00546800
902520/15-361-1005-1/903	00546801
902520/15-361-1009-0/000	00549808
902520/22-573-1003-1/000	00650818
902520/22-573-1005-1/000	00650823
902520/22-474-1003-1/330 (-40 to +80 °C)	00650826
902520/23-573-1003-1/000	00650836
902520/23-573-1005-1/000	00650837
902520/23-474-1003-1/330 (-30 to +60 °C)	00658171
902520/23-474-1003-1/333 (-30 to +60 °C)	00671483
902520/23-474-1003-1/330 (-40 to +80 °C)	00650838
902520/23-474-1003-1/333 (-40 to +80 °C)	00650839
902524/25-380-1003-1-6-100-000/310,404	00410556
902524/25-380-1003-1-6-150-000/310,404	00410562
902524/25-380-1003-1-6-200-000/310,404	00410563
902524/31-380-1003-1-6-100-000/000	00650840
902524/31-380-1003-1-6-100-000/330 (-30 to +60 °C)	00650841

JUMO GmbH & Co. KG
Delivery address: Mackenrodtstraße 14
36039 Fulda, Germany
Postal address: 36035 Fulda, Germany
Phone: +49 661 6003-0
Fax: +49 661 6003-607
Email: mail@jumo.net
Internet: www.jumo.net

JUMO Instrument Co. Ltd.
JUMO House
Temple Bank, Riverway
Harlow, Essex CM 20 2DY, UK
Phone: +44 1279 63 55 33
Fax: +44 1279 62 50 29
Email: sales@jumo.co.uk
Internet: www.jumo.co.uk

JUMO Process Control, Inc.
6733 Myers Road
East Syracuse, NY 13057, USA
Phone: +1 315 437 5866
Fax: +1 315 437 5860
Email: info.us@jumo.net
Internet: www.jumousa.com

Surface RTD Temperature Probes

- For temperatures between -50 and +260 °C
- With protection fittings made from various materials
- For round and flat surfaces
- Simple and quick installation
- Low thermal mass
- Good thermal transfer from the measuring point to the sensor

Surface RTD temperature probes are the preferred choice for measuring temperatures on closed pipe systems and/or other round or flat surfaces. The probes can be installed with ease using tightening bands or cable ties so there is no need for mechanical modification of the measuring location. The basic types 902550/10 and 902550/11 which are provided with a hole for screw-fitting to any surface (such as heating plates) are the exception.

The indirect method of temperature measurement avoids disruption of the medium flow. Additionally, the operating life of the RTD temperature probe is not shortened by the effects of either pressure or chemicals.

The low thermal mass of the probe means that it has very little influence on the measured object. Heat-conducting paste is available to improve heat transfer. Large differences in temperature between the measurement medium and the surrounding environment will influence the measurement. In such cases, we recommend additional insulation.

The measuring insert is fitted as standard with a Pt100 temperature sensor according to DIN EN 60751, class B in a two-wire circuit; versions with Pt500 or Pt1000 are also available.

The product range is rounded off by a pipe contact probe with a large cable socket (basic type 902554/44). This is available with an analog transmitter as an optional extra.

Technical data

Connection	Available as tin-plated cable ends, with ferrules, with plug-in sleeves, or multi-pole plug connectors
Connecting cable	Silicone, ambient temperature -50 to +180 °C PTFE, ambient temperature -190 to +260 °C Kapton, ambient temperature -50 to +260 °C
Cable socket	Basic type 902554/41 and 902554/42 plastic housing: PC, color: silver-gray/blue Basic type 902554/44 plastic housing: PC, color: white Connection via screw terminals, basic type 902554/44 if transmitter not selected available with spring-cage terminals as optional extra
Protection tube	Stainless steel 1.4571, aluminum, plastic
Measuring insert	Pt100 temperature sensor, DIN EN 60751, class B, two-wire circuit
Transmitter	For basic type 902554/44 analog transmitter as optional extra, 4 to 20 mA or 0 to 10 V

Approvals / approval marks

JUMO GmbH & Co. KG
Delivery address: Mackenrodtstraße 14
36039 Fulda, Germany
Postal address: 36035 Fulda, Germany
Phone: +49 661 6003-0
Fax: +49 661 6003-607
Email: mail@jumo.net
Internet: www.jumo.net

JUMO Instrument Co. Ltd.
JUMO House
Temple Bank, Riverway
Harlow, Essex CM 20 2DY, UK
Phone: +44 1279 63 55 33
Fax: +44 1279 62 50 29
Email: sales@jumo.co.uk
Internet: www.jumo.co.uk

JUMO Process Control, Inc.
6733 Myers Road
East Syracuse, NY 13057, USA
Phone: +1 315 437 5866
Fax: +1 315 437 5860
Email: info.us@jumo.net
Internet: www.jumousa.com

Transmitter

	Output 4 to 20 mA	Output 0 to 10 V
Input		
Measurement input	Pt100 (DIN EN 60751)	Pt100 (DIN EN 60751)
Sensor current	≤ 0.5 mA	≤ 0.5 mA
Sampling rate	Permanent measurement due to analog signal path	Permanent measurement due to analog signal path
Measuring circuit monitoring		
Underrange	Dropping to ≤ 3.6 mA	0 V
Overrange	Increasing to ≥ 22 to < 28 mA (typical 24 mA)	Increasing to ≥ 11 to < 14 V (typical 12 V)
Probe short circuit	≤ 3.6 mA	0 V
Probe/cable break	≥ 22 to < 28 mA (typical 24 mA)	≥ 11 to < 14 V (typical 12 V)
Output		
Output signal	Load-independent direct current: 4 to 20 mA	Direct voltage: 0 to 10 V
Transmission behavior	Temperature-linear	Temperature-linear
Transmission accuracy	≤ ±0.1 %	≤ ±0.2 %
Attenuation of the residual ripple of a voltage supply of 24 V, amplitude 10 V/50 Hz, burden 470 Ω/load 10 MΩ	37 dB	40 dB
Burden (Rb)	Rb = (Ub - 7.5 V) ÷ 22 mA	-
Burden influence	≤ ±0.02 %/100 Ω[a]	-
Load / load influence	-	≥ 10 kΩ/≤ ±0.1 %
Setting time for temperature changes	≤ 10 ms	≤ 10 ms
Calibration conditions	DC 24 V/approx. 22 °C	DC 24 V/approx. 22 °C
Calibration accuracy	≤ ±0.2 %[a,b] or ≤ ±0.2 K	≤ ±0.2 %[a,b] or ≤ ±0.2 K
Overall accuracy, sensor/calibration	±0.4 K (typical) at 20 °C/24 V voltage supply	±0.4 K (typical) at 20 °C/24 V voltage supply
Voltage supply		
Voltage supply (Ub)	DC 7.5 to 30 V	DC 15 to 30 V
Reverse voltage protection	Yes	Yes
Voltage supply influence	≤ ±0.01 %/V deviation from 24 V[a]	≤ ±0.01 %/V deviation from 24 V[a]
Environmental influences		
Operating temperature range	-40 to + 85 °C	-40 to + 85 °C
Storage temperature range	-40 to +100 °C	-40 to +100 °C
Temperature influence	≤ ±0.01 %/K deviation from 22 °C[a]	≤ ±0.01 %/K deviation from 22 °C[a]
Resistance to climatic conditions similar to DIN EN 60654 class C1	Relative humidity ≤ 95 % annual average, no condensation	Relative humidity ≤ 95 % annual average, no condensation
EMC interference emission/immunity	EN 61326 class B, industrial requirements	EN 61326 class B, industrial requirements

[a] All specifications refer to the measuring range end value of 20 mA.
[b] The higher value is valid.

Approvals / approval marks

Approval mark	Test facility	Certificate / certification number	Inspection basis	Valid for
SIL QUALIFIED PL QUALIFIED	-	-	-	Extra code 058 in conjunction with declaration of manufacturer

JUMO GmbH & Co. KG
Delivery address: Mackenrodtstraße 14
36039 Fulda, Germany
Postal address: 36035 Fulda, Germany
Phone: +49 661 6003-0
Fax: +49 661 6003-607
Email: mail@jumo.net
Internet: www.jumo.net

JUMO Instrument Co. Ltd.
JUMO House
Temple Bank, Riverway
Harlow, Essex CM 20 2DY, UK
Phone: +44 1279 63 55 33
Fax: +44 1279 62 50 29
Email: sales@jumo.co.uk
Internet: www.jumo.co.uk

JUMO Process Control, Inc.
6733 Myers Road
East Syracuse, NY 13057, USA
Phone: +1 315 437 5866
Fax: +1 315 437 5860
Email: info.us@jumo.net
Internet: www.jumousa.com

Connection diagram

Standard versions

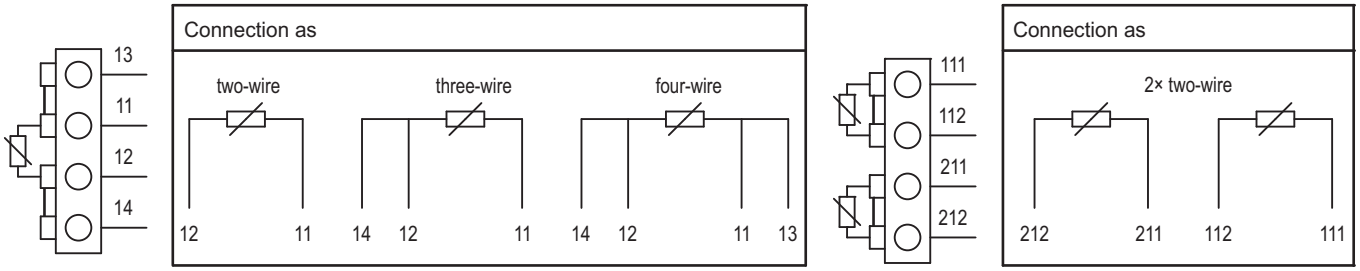

Transmitter for basic type 902554/44

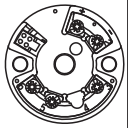

Output 4 to 20 mA

Connection for		Terminal assignment		
	Voltage supply DC 7.5 to 30 V	+ 1 - 2	$R_B = \frac{U_b - 7.5\ V}{22\ mA}$ R_B = Burden resistance U_b = Voltage supply	1 2 + -
	Current output 4 to 20 mA			

Output 0 to 10 V

Connection for		Terminal assignment		
	Voltage supply DC 15 to 30 V	+ 1 - 2	Load ≥ 10 kΩ	1 2 3 + - +
	Voltage output 0 to 10 V	- 2 + 3		

Connection examples

Connection example with power supply, output 4 to 20 mA

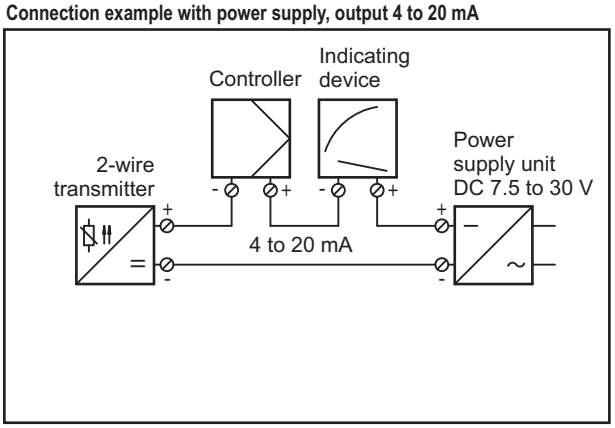

Connection example with power supply, output 0 to 10 V

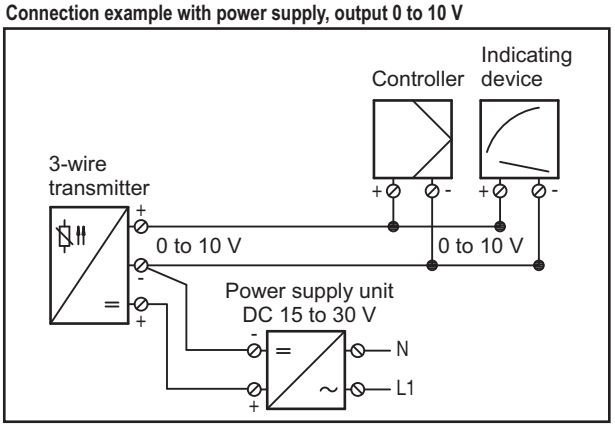

JUMO GmbH & Co. KG
Delivery address: Mackenrodtstraße 14
36039 Fulda, Germany
Postal address: 36035 Fulda, Germany
Phone: +49 661 6003-0
Fax: +49 661 6003-607
Email: mail@jumo.net
Internet: www.jumo.net

JUMO Instrument Co. Ltd.
JUMO House
Temple Bank, Riverway
Harlow, Essex CM 20 2DY, UK
Phone: +44 1279 63 55 33
Fax: +44 1279 62 50 29
Email: sales@jumo.co.uk
Internet: www.jumo.co.uk

JUMO Process Control, Inc.
6733 Myers Road
East Syracuse, NY 13057, USA
Phone: +1 315 437 5866
Fax: +1 315 437 5860
Email: info.us@jumo.net
Internet: www.jumousa.com

Dimensions

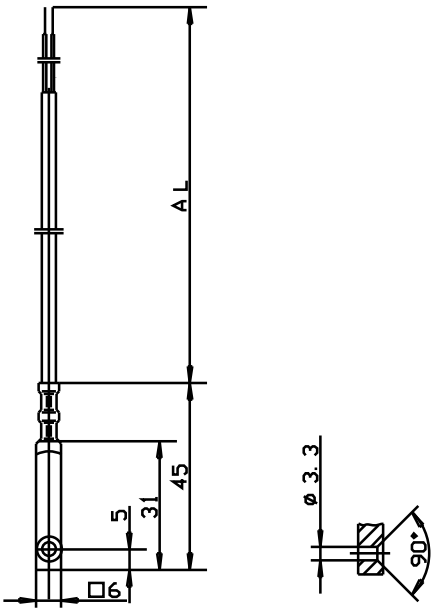

Basic type 902550/10

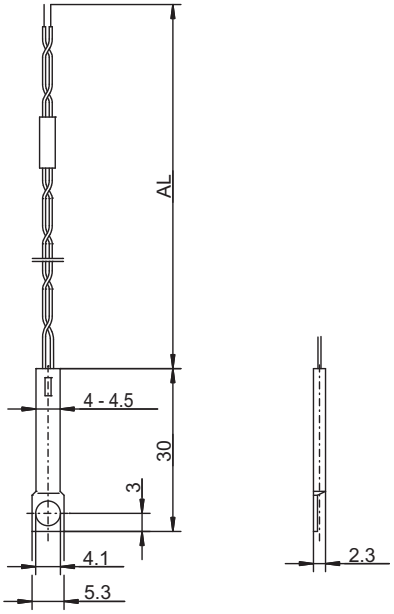

Basic type 902550/11

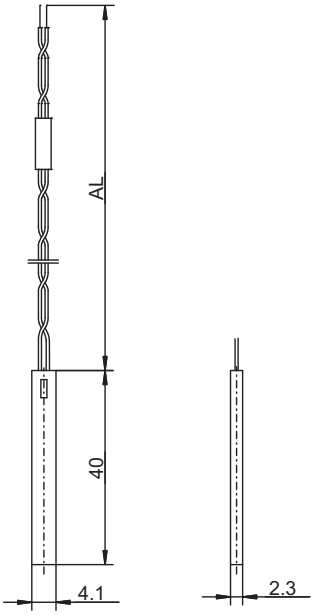

Basic type 902550/20

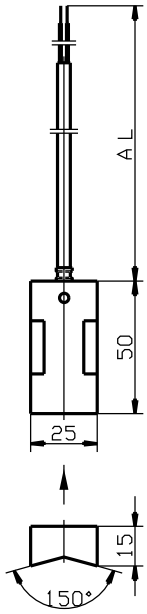

Basic type 902550/30

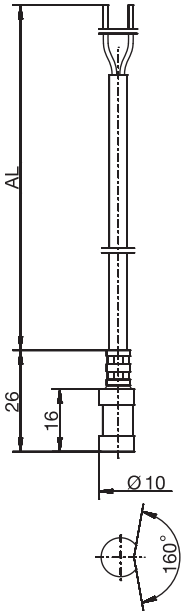

Basic type 902550/31

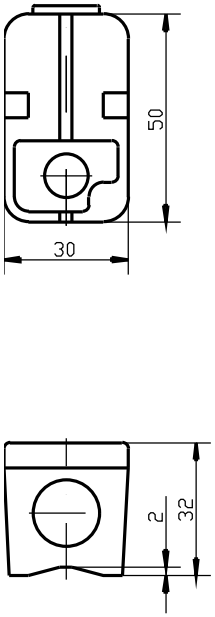

Basic type 902554/41
Basic type 902554/42

JUMO GmbH & Co. KG
Delivery address: Mackenrodtstraße 14
36039 Fulda, Germany
Postal address: 36035 Fulda, Germany
Phone: +49 661 6003-0
Fax: +49 661 6003-607
Email: mail@jumo.net
Internet: www.jumo.net

JUMO Instrument Co. Ltd.
JUMO House
Temple Bank, Riverway
Harlow, Essex CM 20 2DY, UK
Phone: +44 1279 63 55 33
Fax: +44 1279 62 50 29
Email: sales@jumo.co.uk
Internet: www.jumo.co.uk

JUMO Process Control, Inc.
6733 Myers Road
East Syracuse, NY 13057, USA
Phone: +1 315 437 5866
Fax: +1 315 437 5860
Email: info.us@jumo.net
Internet: www.jumousa.com

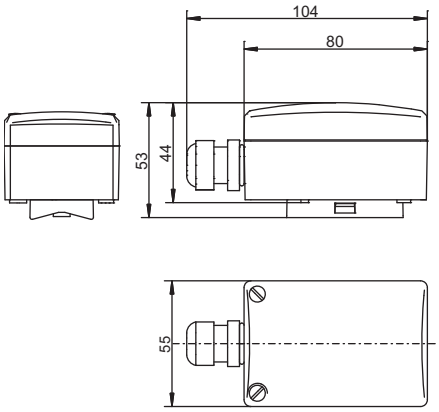

Basic type 902554/44

JUMO GmbH & Co. KG
Delivery address: Mackenrodtstraße 14
36039 Fulda, Germany
Postal address: 36035 Fulda, Germany
Phone: +49 661 6003-0
Fax: +49 661 6003-607
Email: mail@jumo.net
Internet: www.jumo.net

JUMO Instrument Co. Ltd.
JUMO House
Temple Bank, Riverway
Harlow, Essex CM 20 2DY, UK
Phone: +44 1279 63 55 33
Fax: +44 1279 62 50 29
Email: sales@jumo.co.uk
Internet: www.jumo.co.uk

JUMO Process Control, Inc.
6733 Myers Road
East Syracuse, NY 13057, USA
Phone: +1 315 437 5866
Fax: +1 315 437 5860
Email: info.us@jumo.net
Internet: www.jumousa.com

Order details

								(1)	**Basic type**
							902550/10		Surface RTD temperature probe with fastening hole, protection fitting aluminum
						902550/11			Surface RTD temperature probe with fastening hole, protection fitting stainless steel
					902550/20				Surface RTD temperature probe, protection fitting stainless steel
				902550/30					Surface RTD temperature probe, protection fitting aluminum
			902550/31						Surface RTD temperature probe, protection fitting aluminum
								(2)	**Operating temperature in °C (connecting cable)**
						x	730		-5 to +105 °C (PVC)
					x	x	378		-50 to +180 °C (silicone)
x	x	x				x	386		-50 to +260 °C (PTFE)
						x	388		-50 to +260 °C (stainless steel PTFE)
								(3)	**Measuring insert**
x				x	x		1001		1× Pt100 in three-wire circuit
x				x	x		1002		1× Pt500 in three-wire circuit
x	x	x	x	x	x		1003		1× Pt100 in two-wire circuit
x	x	x	x	x	x		1004		1× Pt500 in two-wire circuit
x	x	x	x	x	x		1005		1× Pt1000 in two-wire circuit
x				x	x		1006		1× Pt1000 in three-wire circuit
								(4)	**Tolerance class according to DIN EN 60751**
x	x	x	x	x	x		1		Class B (standard)
x	x	x	x	x	x		2		Class A
								(5)	**Connecting cable end**
x	x	x	x	x	x		04		Tin-plated connection wires
x	x	x	x	x	x		11		Ferrules according to DIN 46228 Part 4 (standard)
x	x	x	x	x	x		13		Plug-in sleeve 6.3 according to DIN 46247
								(6)	**Connecting cable length AL in mm (500 to 500000 mm)**
x	x	x	x	x	x		2500		2500 mm
x	x	x	x	x	x		...		Specification in plain text (500 mm increments)
								(7)	**Extra codes**
x	x	x	x	x	x		000		none
x	x	x	x	x	x		058		SIL and PL-compatible
x			x	x	x		315		Strain-relief spring
x			x	x	x		316		Strain-relief hose

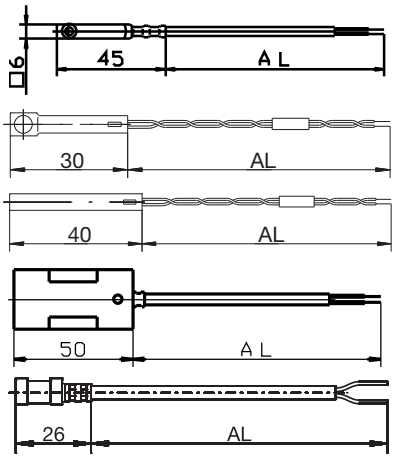

	(1)		(2)		(3)		(4)		(5)		(6)		(7)
Order code	[ ]	-	[ ]	-	[ ]	-	[ ]	-	[ ]	-	[ ]	/	[ ],...[a]
Order example	902550/10	-	386	-	1003	-	1	-	11	-	2500	/	000

[a] List extra codes in sequence, separated by commas.

Accessories

Description	Part no.
Installation kit (tightening band and heat-conducting paste) for pipes up to a max. diameter of 100 mm	00493675

JUMO GmbH & Co. KG
Delivery address: Mackenrodtstraße 14
36039 Fulda, Germany
Postal address: 36035 Fulda, Germany
Phone: +49 661 6003-0
Fax: +49 661 6003-607
Email: mail@jumo.net
Internet: www.jumo.net

JUMO Instrument Co. Ltd.
JUMO House
Temple Bank, Riverway
Harlow, Essex CM 20 2DY, UK
Phone: +44 1279 63 55 33
Fax: +44 1279 62 50 29
Email: sales@jumo.co.uk
Internet: www.jumo.co.uk

JUMO Process Control, Inc.
6733 Myers Road
East Syracuse, NY 13057, USA
Phone: +1 315 437 5866
Fax: +1 315 437 5860
Email: info.us@jumo.net
Internet: www.jumousa.com

				(1)	**Basic type**
			902554/41		Surface RTD temperature probe for cylindrical surfaces (pipes) protection type IP54, incl. installation kit
			902554/42		Surface RTD temperature probe for flat surfaces, protection type IP54
			902554/44		Surface RTD temperature probe for cylindrical surfaces (pipes), protection type IP65, incl. installation kit
				(2)	**Operating temperature in °C**
		x	361		-50 to +90 °C
x	x		365		-50 to +120 °C
		x	474		-40 to +80 °C (measuring range only in conjunction with extra code 330 or 333)
		x	573		-30 to +90 °C
				(3)	**Measuring insert**
x	x	x	1003		1× Pt100 in two-wire circuit
x	x	x	1004		1× Pt500 in two-wire circuit
x	x	x	1005		1× Pt1000 in two-wire circuit
x	x	x	1009		1× Ni1000 in two-wire circuit
		x	1619		1× KTY81-110 in two-wire circuit
x	x	x	1622		1× KTY81-122 in two-wire circuit
		x	1654		1× LM235 Z
		x	1728		1× NTC 1 kOhm
				(4)	**Tolerance class according to DIN EN 60751**
x	x	x	0		Technical data Ni/NTC/KTY/LM235 Z
x		x	1		Class B (standard)
x		x	2		Class A
		x	3		Class AA
				(5)	**Extra codes**
x	x	x	000		none
x	x	x	058		SIL and PL-compatible
		x	242		Conductor connection via spring-cage terminals (not in conjunction with transmitter)
		x	330		1× analog transmitter, output 4 to 20 mA[a] (in conjunction with Pt100), data sheet 707030
		x	333		1× analog transmitter, output 0 to 10 V[a] (in conjunction with Pt100), data sheet 707030
x	x		404		Protection type IP65 (cable fitting M16 × 1.5)

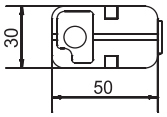

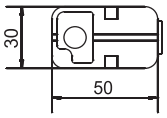

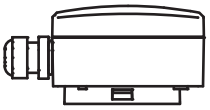

[a] Specify measuring range (deviating measuring range) in plain text.

	(1)		(2)		(3)		(4)		(5)	
Order code		-		-		-		/		,...[a]
Order example	902554/41	-	365	-	1003	-	1	/	000	

[a] List extra codes in sequence, separated by commas.

JUMO GmbH & Co. KG
Delivery address: Mackenrodtstraße 14
36039 Fulda, Germany
Postal address: 36035 Fulda, Germany
Phone: +49 661 6003-0
Fax: +49 661 6003-607
Email: mail@jumo.net
Internet: www.jumo.net

JUMO Instrument Co. Ltd.
JUMO House
Temple Bank, Riverway
Harlow, Essex CM 20 2DY, UK
Phone: +44 1279 63 55 33
Fax: +44 1279 62 50 29
Email: sales@jumo.co.uk
Internet: www.jumo.co.uk

JUMO Process Control, Inc.
6733 Myers Road
East Syracuse, NY 13057, USA
Phone: +1 315 437 5866
Fax: +1 315 437 5860
Email: info.us@jumo.net
Internet: www.jumousa.com

Stock versions

Order code	Part no.
902550/10-386-1003-1-11-2500/000	00306774
902550/11-386-1003-1-11-2500/000	00065548
902550/20-386-1003-1-11-2500/000	00065547
902550/30-378-1003-1-11-2500/315	00065531
902550/31-730-1003-1-11-2500/000	00506998
902550/31-378-1003-1-11-2500/000	00507000
902550/31-378-1005-1-11-2500/000	00507006
902554/41-365-1003-1/000	00378669
902554/41-365-1003-1/404	00376703

JUMO GmbH & Co. KG
Delivery address: Mackenrodtstraße 14, 36039 Fulda, Germany
Postal address: 36035 Fulda, Germany
Phone: +49 661 6003-0
Fax: +49 661 6003-607
e-mail: mail@jumo.net
Internet: www.jumo.net

JUMO Instrument Co. Ltd.
JUMO House
Temple Bank, Riverway
Harlow, Essex CM20 2DY, UK
Phone: +44 1279 635533
Fax: +44 1279 635262
e-mail: sales@jumo.co.uk
Internet: www.jumo.co.uk

JUMO Process Control, Inc.
8 Technology Boulevard
Canastota, NY 13032, USA
Phone: 315-697-JUMO
1-800-554-JUMO
Fax: 315-697-5867
e-mail: info@jumo.us
Internet: www.jumo.us

Test equipment for temperature and its reduction

- **Pt100 precision RTD temperature probe**
- **Calibrated temperature measuring chain with precision display device**
- **Calibrations as service (DAkkS approved)**
- **Calibration measuring range -80 to +1100 °C**

Increased quality consciousness, improved measuring techniques and quality assurance systems, such as, for instance, DIN ISO 9000, strengthen the requirements regarding process documentation and measuring means monitoring.

The use of platinum precision RTD temperature probes is preferred as standard. They are intended to monitor all temperature probes used in industry, building services engineering and quality assurance.

In connection with a precision display unit (temperature measuring chain) the measured temperatures can be directly read and transmitted online via the USB interface. For documentation purposes, the "DE-Graph" software available as an option, allows the establishment of tables and graphics as well as editing in other Windows applications.

The main criterion of all devices is the traceability of the measurement results to the national standards. DAkkS (DKD)-calibrated test equipment is recognized without further information as feedback instruments, both in Europe and in many countries outside of Europe. The calibration service is available at any time for existing test equipment.

Technical data

Precision RTD temperature probe:

Measuring insert:
Pt100 ceramic temperature probe as per DIN EN 60751, cl. A

Temperatures:
-50 to +250 °C, -200 to +450 °C

Sheath:
Stainless steel 1.4541, Ø 3 mm, Ø 4.5 mm

Protection class:
IP65

Connection:
4-pin Lemosa coupling, size 1, 4-wire circuit, included in the scope of delivery is a 1.5 m long silicone insulated connection line with connector, ambient temperature -30 to +150 °C

Response times: (in water with 0.4 m/s and air 3 m/s)

Ø 3 mm:	Water	$t_{0.5}$ = 1.3 s,	$t_{0.9}$ = 4 s
	Air	$t_{0.5}$ = 14 s,	$t_{0.9}$ = 41 s
Ø 4.5 mm:	Water	$t_{0.5}$ = 3.5 s,	$t_{0.9}$ = 9 s
	Air	$t_{0.5}$ = 31.5 s,	$t_{0.9}$ = 89 s

JUMO GmbH & Co. KG
Delivery address: Mackenrodtstraße 14, 36039 Fulda, Germany
Postal address: 36035 Fulda, Germany
Phone: +49 661 6003-0
Fax: +49 661 6003-607
e-mail: mail@jumo.net
Internet: www.jumo.net

JUMO Instrument Co. Ltd.
JUMO House
Temple Bank, Riverway
Harlow, Essex CM20 2DY, UK
Phone: +44 1279 635533
Fax: +44 1279 635262
e-mail: sales@jumo.co.uk
Internet: www.jumo.co.uk

JUMO Process Control, Inc.
8 Technology Boulevard
Canastota, NY 13032, USA
Phone: 315-697-JUMO
1-800-554-JUMO
Fax: 315-697-5867
e-mail: info@jumo.us
Internet: www.jumo.us

Precision display unit:

Description:
These universally applicable, process-controlled indicating devices convince with highest accuracy and are perfectly suitable for measuring tasks that require highest precision. Application areas are in the fields of quality assurance, production, maintenance/repair and service as well as in the air conditioning and environmental technology. All devices of the P700 series are equipped with a USB interface allowing an online documentation of the measured values. This interface can also be used for supplying the devices with power. The measured data can be processed further using the optionally available Windows software "DE-Graph“.

Product features:
- integrated calibration function for simple compensation of probe tolerances
- 1-stage, 2-stage or 3-stage calibration optionally possible
- USB interface
- Windows evaluation software optionally available (see accessories "DE-Graph")
- Large LCD display
- Storage of MAX, MIN, HOLD and average values
- Differential temperature display for 2-channel units, simultaneous display of both values
- Mains operation possible
- Pt100 input in 4-wire circuit, thermocouple inputs as per DIN EN 60584
- Measuring channels can be freely assigned
- °C/°F change-over

Versions:

902722/20 (P700)	Pt100, thermocouple type J, K, L, N, R, S, T 1-channel; resolution 0.1 °C
902722/25 (P705)	Pt100, thermocouple type J, K, L, N, R, S, T 2-channel; resolution 0.1 °C
902722/30 (P750)	Pt100, thermocouple type J, K, L, N, R, S, T, 1-channel; resolution 0.01 °C from -200 to +200 °C, otherwise 0.1 °C
902722/35 (P755)	Pt100, thermocouple type J, K, L, N, R, S, T 2-channel; resolution 0.01 °C from -200 to +200 °C, otherwise 0.1 °C

Measuring ranges:
-200 to +850 °C (Pt100), thermocouples as per DIN EN 60584

Accuracy:

Version 902722/20 ... 25:	
for Pt100	± 0.1 °C from -100 to +200 °C, residual range 0.1 % of the measured value
for thermocouple type: R, S	± 1.0 °C + 0.1 % of the measured value
for thermocouple type: K, J, L, N, T	± 0.2 °C from 0 to 200 °C, ± 0.5 °C up to 1000 °C, residual range ± 1.0 °C of the measured value
Version 902722/30 ... 35:	
for Pt100	± 0.03 °C from -50 to +199.99 °C, ± 0.05 °C from -200 to -50.01 °C, residual range 0.05 % of the measured value
for thermocouple type: R, S	± 1.0 °C + 0.1 % of the measured value
for thermocouple type: K, J, L, N, T	± 0.2 °C from 0 to 200 °C, ± 1.0 °C residual range

Display:
2-line LCD display

Case:
ABS plastics, dimensions 200 mm x 93 mm x 44 mm (L x W x H)

Admissible operating temperature:
0 to 40°C

Weight:
approx. 350 g

JUMO GmbH & Co. KG
Delivery address: Mackenrodtstraße 14, 36039 Fulda, Germany
Postal address: 36035 Fulda, Germany
Phone: +49 661 6003-0
Fax: +49 661 6003-607
e-mail: mail@jumo.net
Internet: www.jumo.net

JUMO Instrument Co. Ltd.
JUMO House
Temple Bank, Riverway
Harlow, Essex CM20 2DY, UK
Phone: +44 1279 635533
Fax: +44 1279 635262
e-mail: sales@jumo.co.uk
Internet: www.jumo.co.uk

JUMO Process Control, Inc.
8 Technology Boulevard
Canastota, NY 13032, USA
Phone: 315-697-JUMO
1-800-554-JUMO
Fax: 315-697-5867
e-mail: info@jumo.us
Internet: www.jumo.us

DE-Graph:

Protocol and evaluation software:
The software offers versatile possibilities for online documentation and processing of the measured values under Windows. This application is recommended for all those applications, where measured data must often be documented or compared. In addition, precision RTD temperature probes and their calibration numbers can be efficiently managed. The physical connection of display unit and PC is automatically carried out via the USB port. The measured data can be comfortably displayed and analysed in graphics and tables. Any number of measuring channels and graphic windows can be selected. Printing is possible on any installed Windows printer.
The program allows comfortable data download in the DBF format and an easy export to Excel. The languages German, English and French can be selected.

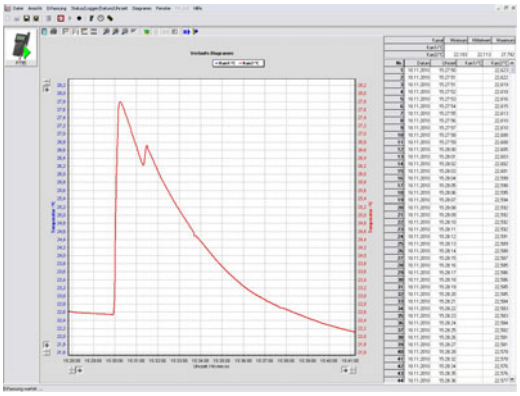

Visualization in graphics and tables

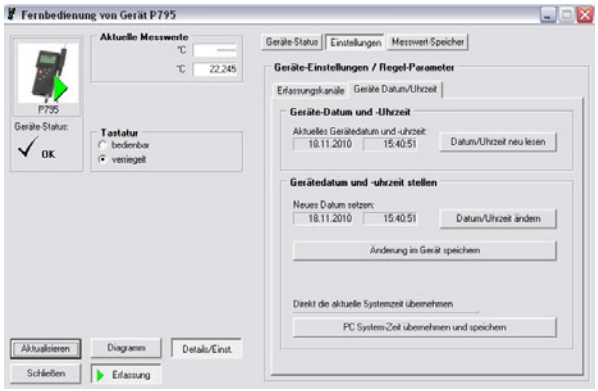

Device setting management

Calibration services:

The **calibration laboratory for the temperature measuring variable (D-K-15129-01-00) at JUMO** has been approved by the Physikalisch-Technische Bundesanstalt (PTB) (German physical-technical federal agency) since 1992. With its latest DAkkS approval, the calibration laboratory is allowed to hand over calibration certificates for the calibration objects and measuring ranges specified as follows. In respect to the smallest measuring uncertainty, take into account that greater measuring uncertainties as specified in the table can be passed on depending on the respective test parts.
The values result from the stability inspection on the respective calibration objects.

Calibration object	Measuring range	Measuring uncertainty
- RTD temperature probe, - directly indicating electronic temperature probe (temperature measuring chains), - Data logger	0.01 °C -80 to 0 °C > 0 to 90 °C > 90 to 300 °C	5 mK 15 mK 10 mK 15 mK
- Thermocouples	-80 to +200 °C > 200 to 300 °C	0.2 K 0.3 K
- Noble metal thermocouples	> 300 to 1100°C	1.0 K
- Non-noble metal thermocouples, - directly indicating electronic temperature probe	> 300 to 1100°C	1.5 K
- RTD temperature probe with transmitter, - directly indicating electronic temperature probe, with transmitter	-80 to 0 °C > 0 to 90 °C > 90 to 300 °C	45 mK 40 mK 45 mK
- Temperature block calibrators	30 to 133 °C > 133 to 660 °C > 660 to 1100 °C	0.2 K 1.5 mK x (T) 2.5 K

Extended possibilities due to factory calibration on request !

JUMO GmbH & Co. KG
Delivery address: Mackenrodtstraße 14, 36039 Fulda, Germany
Postal address: 36035 Fulda, Germany
Phone: +49 661 6003-0
Fax: +49 661 6003-607
e-mail: mail@jumo.net
Internet: www.jumo.net

JUMO Instrument Co. Ltd.
JUMO House
Temple Bank, Riverway
Harlow, Essex CM20 2DY, UK
Phone: +44 1279 635533
Fax: +44 1279 635262
e-mail: sales@jumo.co.uk
Internet: www.jumo.co.uk

JUMO Process Control, Inc.
8 Technology Boulevard
Canastota, NY 13032, USA
Phone: 315-697-JUMO
1-800-554-JUMO
Fax: 315-697-5867
e-mail: info@jumo.us
Internet: www.jumo.us

Dimensions

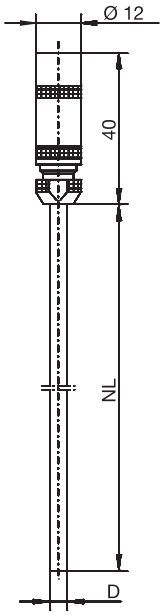

Precision RTD temperature probe
Basic type 902721/10
Basic type 902721/15

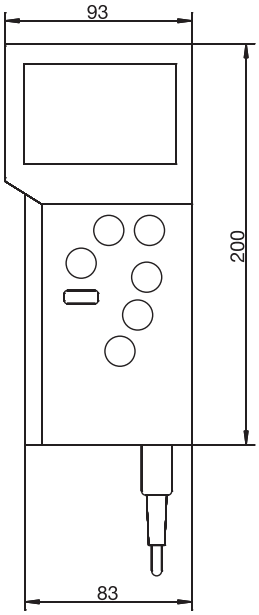

Precision indication device (P700)
Basic type 902722/20
Basic type 902722/25
Basic type 902722/30
Basic type 902722/35

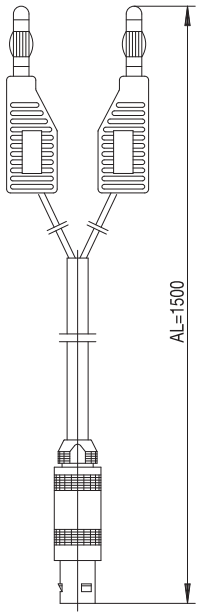

Connection cable,
precision RTD temperature probe

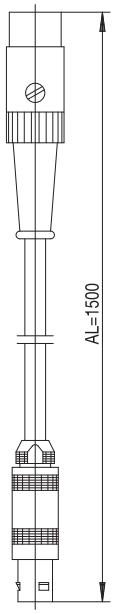

Connection cable,
temperature measuring chain
for Pt100

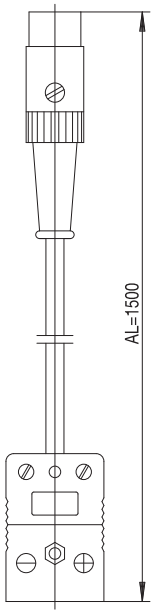

Compensation line,
temperature measuring chain for
thermocouples (NiCr-Ni, type K)

JUMO GmbH & Co. KG
Delivery address: Mackenrodtstraße 14, 36039 Fulda, Germany
Postal address: 36035 Fulda, Germany
Phone: +49 661 6003-0
Fax: +49 661 6003-607
e-mail: mail@jumo.net
Internet: www.jumo.net

JUMO Instrument Co. Ltd.
JUMO House
Temple Bank, Riverway
Harlow, Essex CM20 2DY, UK
Phone: +44 1279 635533
Fax: +44 1279 635262
e-mail: sales@jumo.co.uk
Internet: www.jumo.co.uk

JUMO Process Control, Inc.
8 Technology Boulevard
Canastota, NY 13032, USA
Phone: 315-697-JUMO
1-800-554-JUMO
Fax: 315-697-5867
e-mail: info@jumo.us
Internet: www.jumo.us

Order details: Precision RTD temperature probe

			(1) Basic type
		902721/10	Precision RTD temperature probe as per DIN EN 60751 Pt100 4-wire/Lemosa connector/ connection cable/-50 to +250 °C
		902721/15	Precision RTD temperature probe as per DIN EN 60751 Pt100 4-wire/Lemosa connector/ connection cable/-200 to +450 °C
			(2) Sheath diameter D in mm
x	x	3	Ø 3 mm
x	x	4.5	Ø 4.5 mm
			(3) Fitting length EL in mm
x		200	200 mm
x	x	300	300 mm
	x	400	400 mm
			(4) Packaging
x	x	10	In twist pack
			(5) Extra codes
x	x	000	no extra code
x	x	774	DAkkS (DKD) calibration (standard, with RTD temperature value table)**
x	x	775	DAkkS (DKD) calibration (service, specify inspection points in plain text)

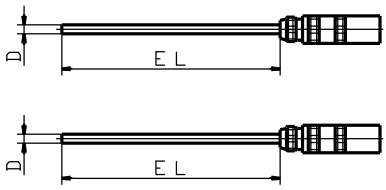

	(1)		(2)		(3)		(4)		(5)	
Order code	[ ]	-	[ ]	-	[ ]	-	[ ]	/	[ ]	,...
Order example	902721/10	-	3	-	200	-	10	/	775, -10, 0, +25°C[1]	

1. State extra codes one after the other, separated by commas.

Note:
** For extra code standard calibration, the temperatures 0, 100 and 200 °C are used as inspection points. Different and further inspection points are optionally selectable under extra code 775.

Temperature probe connection
An 1.5 m long silicone insulated connection line is contained in the scope of delivery.

JUMO GmbH & Co. KG
Delivery address: Mackenrodtstraße 14, 36039 Fulda, Germany
Postal address: 36035 Fulda, Germany
Phone: +49 661 6003-0
Fax: +49 661 6003-607
e-mail: mail@jumo.net
Internet: www.jumo.net

JUMO Instrument Co. Ltd.
JUMO House
Temple Bank, Riverway
Harlow, Essex CM20 2DY, UK
Phone: +44 1279 635533
Fax: +44 1279 635262
e-mail: sales@jumo.co.uk
Internet: www.jumo.co.uk

JUMO Process Control, Inc.
8 Technology Boulevard
Canastota, NY 13032, USA
Phone: 315-697-JUMO
1-800-554-JUMO
Fax: 315-697-5867
e-mail: info@jumo.us
Internet: www.jumo.us

Order details: Temperature measuring chain

					(1) Display unit basic type
				902722/20	Precision display unit P700 1-channel/resolution 0.1 °C/-200 to +850 °C Pt100, thermocouples: type K, J, L, N, R, S, T
				902722/25	Precision display unit P705 2-channel/resolution 0.1 °C/-200 to +850 °C Pt100, thermocouples: type K, J, L, N, R, S, T
				902722/30	Precision display unit P750 1-channel/resolution 0.01 °C/0.1 °C/-200 to +850 °C Pt100, thermocouples: type K, J, L, N, R, S, T
				902722/35	Precision display unit P755 2-channel/resolution 0.01 °C/0.1 °C/-200 to +850 °C Pt100, thermocouples: type K, J, L, N, R, S, T
					(2) Operating temperature, temperature probe, in °C
x	x	x	x	135	-200 to +450 °C (Precision RTD temperature probe including adapter cable)
x	x	x	x	150	-200 to +600 °C (RTD temperature probe), basic type 902240/20...*
x	x	x	x	185	-200 to +1200 °C (Thermocouples), basic type 901240/20-1043... including adapter cable*
x	x	x	x	385	-50 to +250 °C (Precision RTD temperature probe including adapter cable)
x	x	x	x	415	-50 to +600 °C (RTD temperature probe), basic type 902240/20...*
					(3) Temperature probe sheath diameter D in mm
x	x	x	x	3	Ø 3 mm
x	x	x	x	4.5	Ø 4.5 mm
x	x	x	x	...	Specification in plain text (only for (2) selection 150, 185 and 415)*
					(4) Temperature probe fitting length in mm
x	x	x	x	200	200 mm (not for (2) selection 135)
x	x	x	x	300	300 mm
x	x	x	x	400	400 mm (not for (2) selection 385)
x	x	x	x	...	Specification in plain text (50 mm steps, only for (2) selection 150, 185 and 415)*
					(5) Number of temperature probes
x	x	x	x	...	Specifications in plain text
					(6) Extra codes
x	x	x	x	000	no extra code
x	x	x	x	773	DAkkS (DKD) calibration (standard, display values only)**
x	x	x	x	774	DAkkS (DKD) calibration (standard, with RTD temperature value table)**
x	x	x	x	775	DAkkS (DKD) calibration (service, specify inspection points in plain text)
x	x	x	x	781	Connector power pack AC 230 V for P700 series
x	x	x	x	782	Service box (plastic) with foam padding
x	x	x	x	923	"DE-Graph“ evaluation software
			x	926	With storage module for 6.000 measured values

	(1)		(2)		(3)		(4)		(5)		(6)	
Order code	[ ]	-	[ ]	-	[ ]	-	[ ]	-	[ ]	/	[ ]	, ...
Order example	902722/35	-	135	-	3	-	200	-	2	/	775, -40, 0, 100°C[1]	

1. State extra codes one after the other, separated by commas.

Note:

* Please select the precise version from the respective data sheets 90.1210 and 90.2210 and specify the fitting length and the sheath diameter in the order details.

** For extra code standard calibration, the temperatures 0, 100 and 200 °C are used as inspection points. Different and further inspection points are optionally selectable under extra code 775.

JUMO GmbH & Co. KG
Delivery address: Mackenrodtstraße 14
36039 Fulda, Germany
Postal address: 36035 Fulda, Germany
Phone: +49 661 6003-0
Fax: +49 661 6003-607
Email: mail@jumo.net
Internet: www.jumo.net

JUMO Instrument Co. Ltd.
JUMO House
Temple Bank, Riverway
Harlow, Essex, CM20 2DY, UK
Phone: +44 1279 63 55 33
Fax: +44 1279 62 50 29
Email: sales@jumo.co.uk
Internet: www.jumo.co.uk

JUMO Process Control, Inc.
6733 Myers Road
East Syracuse, NY 13057, USA
Phone: +1 315 437 5866
Fax: +1 315 437 5860
Email: info.us@jumo.net
Internet: www.jumousa.com

RTD Temperature Probe for the Food/Pharmaceutical Industry

- **For temperatures between -50 and +250 °C**
- **Protection type up to IP69 according to DIN EN 60529 (IP69K according to DIN 40050)**
- **Hygienic process connection**
- **Stainless steel protection tubes**
- **Available with two-wire transmitter**
- **CIP-compliant insertion**

The RTD temperature probes can be built with terminal heads made of stainless steel or die-cast aluminum.

Various process connections are available for the different requirements of sub-areas in the food/pharmaceutical industry. These include screw connections G 3/8, G 1/2 with CIP-compliant conical seal, taper sockets with union nut (dairy pipe fitting), clamping sockets (clamp), movable ball welding sockets with threaded fitting, welding sockets with CIP-compliant conical seal, VARIVENT® connections, and ball welding sleeves.

Additionally, basic types 902810/40 and 902810/41, which are designed for use with hygienic thermowells according to data sheet 902812, are available.

The protection tubes are made of stainless steel.

The RTD temperature probes for the food/pharmaceutical industry are suitable for use in a temperature range from -50 to +250 °C.

High accuracy is ensured by single or double Pt100 temperature sensors according to DIN EN 60751, class A.
Optional analog or programmable two-wire transmitters can be used for longer transmission distances.

Approvals / approval marks

JUMO GmbH & Co. KG
Delivery address: Mackenrodtstraße 14
36039 Fulda, Germany
Postal address: 36035 Fulda, Germany
Phone: +49 661 6003-0
Fax: +49 661 6003-607
Email: mail@jumo.net
Internet: www.jumo.net

JUMO Instrument Co. Ltd.
JUMO House
Temple Bank, Riverway
Harlow, Essex, CM20 2DY, UK
Phone: +44 1279 63 55 33
Fax: +44 1279 62 50 29
Email: sales@jumo.co.uk
Internet: www.jumo.co.uk

JUMO Process Control, Inc.
6733 Myers Road
East Syracuse, NY 13057, USA
Phone: +1 315 437 5866
Fax: +1 315 437 5860
Email: info.us@jumo.net
Internet: www.jumousa.com

Technical data

Terminal heads	Stainless steel 1.4571, M16 × 1.5; ambient temperature -20 to +100 °C, protection type IP69 according to DIN EN 60529 (IP69K according to DIN 40050), cable screw connection made of plastic Form B DIN 43729, die-cast aluminum, M20 × 1.5; IP65, ambient temperature -40 to +100 °C Form BUZ, die-cast aluminum, M20 × 1.5; IP65, ambient temperature -40 to +100 °C Form BUZH, die-cast aluminum, M20 × 1.5; IP65, ambient temperature -40 to +100 °C Caution: reduced ambient temperature when using transmitters; data sheet 707010, 707030, and 707050
Extension tube (HR)	Stainless steel, length approx. 70 mm, Ø 9 mm
Process connections	Screw connection G 3/8 Screw connection G 1/2 with CIP-compliant conical seal, stainless steel 316 L Clamping socket (clamp) DIN 32676, stainless steel 316 L Clamping socket with union nut (dairy pipe fitting) DIN 11851, stainless steel 316 L Ball welding socket, stainless steel 316 L, PTFE clamping ring Welding socket with CIP-compliant conical seal, stainless steel 316 L, PTFE seal VARIVENT®[a] connection, stainless steel 316 L Ball welding sleeve, stainless steel 316 Ti JUMO PEKA hygienic process connection, stainless steel 316 L
Protection tubes	Stainless steel 316 L Stainless steel 316 Ti, upon request
Measuring insert	Pt100 temperature sensor DIN EN 60751, class A Pt100 temperature sensor DIN EN 60751, class AA
Response times	$t_{0.9}$ = 10 s, in water, flow velocity 0.4 m/s, protection tube diameter 6 mm
Transmitter	Analog transmitter, output 4 to 20 mA, data sheet 707030 Analog transmitter, output 0 to 10 V, data sheet 707030 Programmable transmitter, output 4 to 20 mA/20 to 4 mA, data sheet 707010 Programmable transmitter, output 4 to 20 mA/20 to 4 mA (USB), data sheet 707050

[a] VARIVENT® is a registered trademark of GEA Tuchenhagen.

Approvals / approval marks

Approval mark	Test facility	Certificate / certification number	Inspection basis	Valid for
SIL QUALIFIED PL QUALIFIED	-	-	-	Extra code 058 Basic type 902810/13, 902810/20, 902810/40, and 902810/41 in conjunction with declaration of manufacturer

JUMO GmbH & Co. KG
Delivery address: Mackenrodtstraße 14
36039 Fulda, Germany
Postal address: 36035 Fulda, Germany
Phone: +49 661 6003-0
Fax: +49 661 6003-607
Email: mail@jumo.net
Internet: www.jumo.net

JUMO Instrument Co. Ltd.
JUMO House
Temple Bank, Riverway
Harlow, Essex, CM20 2DY, UK
Phone: +44 1279 63 55 33
Fax: +44 1279 62 50 29
Email: sales@jumo.co.uk
Internet: www.jumo.co.uk

JUMO Process Control, Inc.
6733 Myers Road
East Syracuse, NY 13057, USA
Phone: +1 315 437 5866
Fax: +1 315 437 5860
Email: info.us@jumo.net
Internet: www.jumousa.com

Dimensions

Basic types

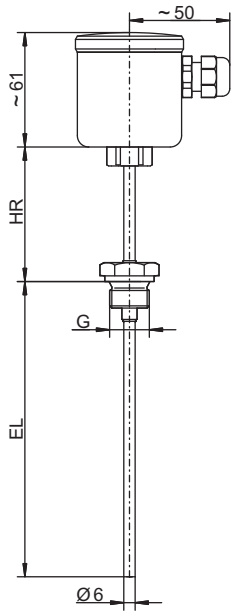

Basic type 902810/20
with process connection PA 104

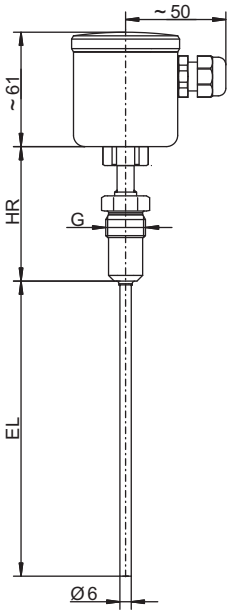

Basic type 902810/20
with process connection PA 380

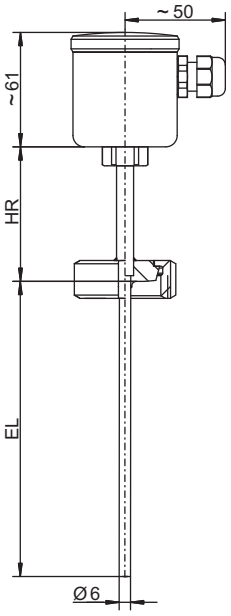

Basic type 902810/20
with process connection PA 601

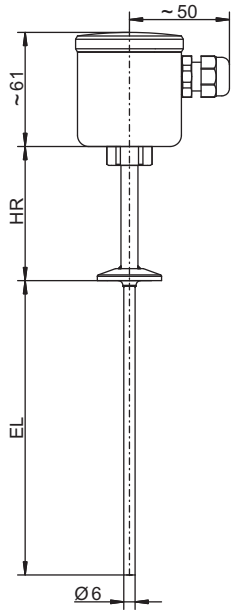

Basic type 902810/20
with process connection PA 611

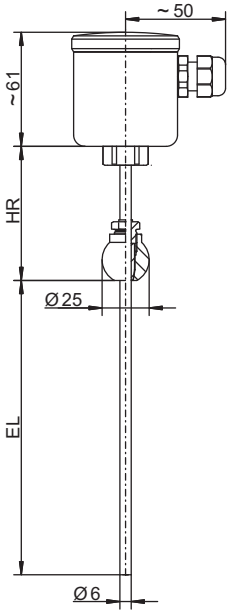

Basic type 902810/20
with process connection PA 681

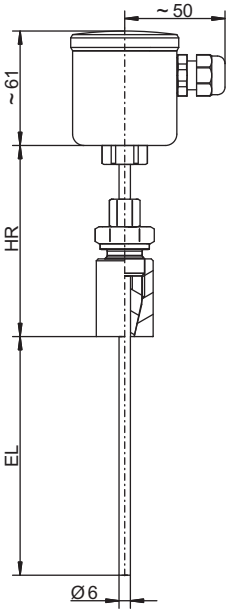

Basic type 902810/20
with process connection PA 682

JUMO GmbH & Co. KG
Delivery address: Mackenrodtstraße 14
36039 Fulda, Germany
Postal address: 36035 Fulda, Germany
Phone: +49 661 6003-0
Fax: +49 661 6003-607
Email: mail@jumo.net
Internet: www.jumo.net

JUMO Instrument Co. Ltd.
JUMO House
Temple Bank, Riverway
Harlow, Essex, CM20 2DY, UK
Phone: +44 1279 63 55 33
Fax: +44 1279 62 50 29
Email: sales@jumo.co.uk
Internet: www.jumo.co.uk

JUMO Process Control, Inc.
6733 Myers Road
East Syracuse, NY 13057, USA
Phone: +1 315 437 5866
Fax: +1 315 437 5860
Email: info.us@jumo.net
Internet: www.jumousa.com

Basic types

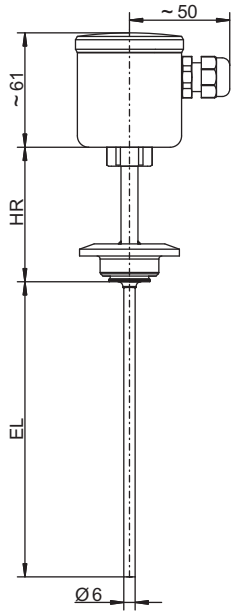

Basic type 902810/20
with process connection PA 684

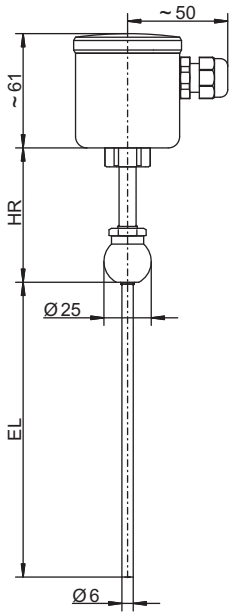

Basic type 902810/20
with process connection PA 840

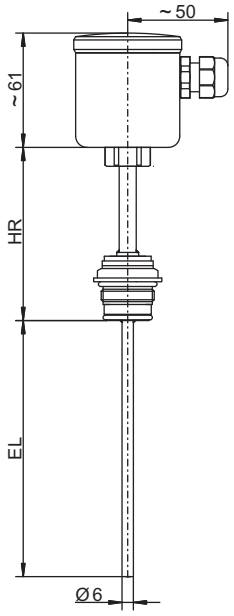

Basic type 902810/20
with process connection PA 997

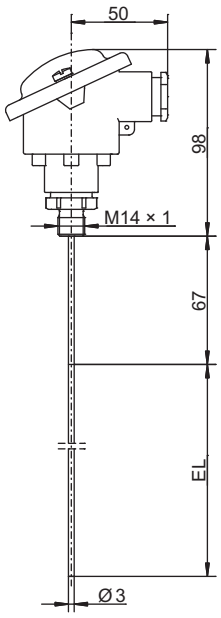

Basic type 902810/40
with process connection PA 120

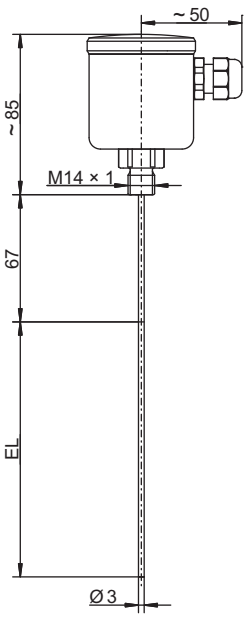

Basic type 902810/41
with process connection PA 120

JUMO GmbH & Co. KG
Delivery address: Mackenrodtstraße 14
36039 Fulda, Germany
Postal address: 36035 Fulda, Germany
Phone: +49 661 6003-0
Fax: +49 661 6003-607
Email: mail@jumo.net
Internet: www.jumo.net

JUMO Instrument Co. Ltd.
JUMO House
Temple Bank, Riverway
Harlow, Essex, CM20 2DY, UK
Phone: +44 1279 63 55 33
Fax: +44 1279 62 50 29
Email: sales@jumo.co.uk
Internet: www.jumo.co.uk

JUMO Process Control, Inc.
6733 Myers Road
East Syracuse, NY 13057, USA
Phone: +1 315 437 5866
Fax: +1 315 437 5860
Email: info.us@jumo.net
Internet: www.jumousa.com

Terminal heads

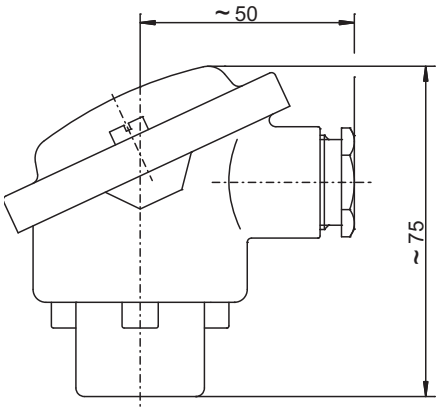

Terminal head form B
Standard for basic type 902810/13 and 902810/40

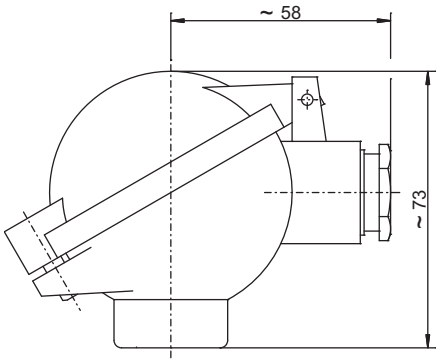

Terminal head form BUZ
Extra code 320

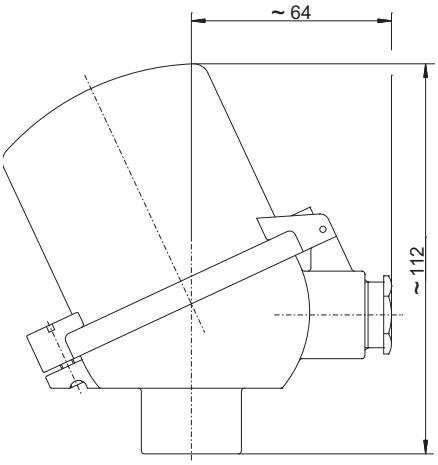

Terminal head form BUZH
Extra code 321

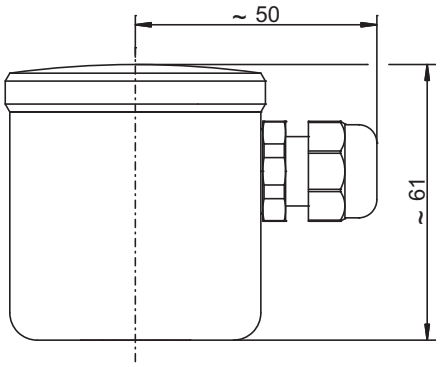

Stainless steel terminal head
Standard for basic type 902810/20 and 902810/41

JUMO GmbH & Co. KG
Delivery address: Mackenrodtstraße 14
36039 Fulda, Germany
Postal address: 36035 Fulda, Germany
Phone: +49 661 6003-0
Fax: +49 661 6003-607
Email: mail@jumo.net
Internet: www.jumo.net

JUMO Instrument Co. Ltd.
JUMO House
Temple Bank, Riverway
Harlow, Essex, CM20 2DY, UK
Phone: +44 1279 63 55 33
Fax: +44 1279 62 50 29
Email: sales@jumo.co.uk
Internet: www.jumo.co.uk

JUMO Process Control, Inc.
6733 Myers Road
East Syracuse, NY 13057, USA
Phone: +1 315 437 5866
Fax: +1 315 437 5860
Email: info.us@jumo.net
Internet: www.jumousa.com

Order details

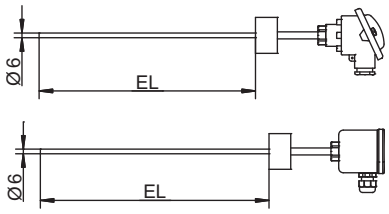

			(1)	**Basic type**
		902810/13		RTD temperature probe for the food/pharmaceutical industry with terminal head form B
		902810/20		RTD temperature probe for the food/pharmaceutical industry with stainless steel terminal head
			(2)	**Measuring insert**
x	x	1001		1× Pt100 in three-wire circuit
x	x	2001		2× Pt100 in three-wire circuit
			(3)	**Tolerance class according to DIN EN 60751**
x	x	2		Class A (standard)
x	x	3		Class AA
			(4)	**Protection tube diameter D in mm**
x	x	6		Ø 6 mm
			(5)	**Insertion length EL in mm (25 to 400 mm)**
x	x	25		25 mm
x	x	50		50 mm
x	x	100		100 mm
x	x	150		150 mm
x	x	...		Please specify in plain text (50 mm increments)
			(6)	**Process connection**
x	x	103		Screw connection G 3/8
x	x	104		Screw connection G 1/2
x	x	380		Screw connection G 1/2 with CIP-compliant conical seal
x	x	601		Taper socket with union nut DN 10 DIN 11851 (dairy pipe fitting)
x	x	604		Taper socket with union nut DN 25 DIN 11851 (dairy pipe fitting)
x	x	605		Taper socket with union nut DN 32 DIN 11851 (dairy pipe fitting)
x	x	611		Clamping socket (clamp) DN 10/20 DIN 32676
x	x	613		Clamping socket (clamp) DN 25/40 (1"/1.5") DIN 32676
x	x	616		Clamping socket (clamp) DN 50 (2") DIN 32676
x	x	617		Clamping socket (clamp) 2.5" similar to DIN 32676
x	x	681		Ball welding socket with threaded fitting
x	x	682		Welding socket with CIP-compliant conical seal
x	x	684		VARIVENT® connection DN 15/10
x	x	685		VARIVENT® connection DN 32/25
x	x	686		VARIVENT® connection DN 50/40
x	x	840		Ball welding sleeve (material 316 Ti)
x	x	997		JUMO PEKA hygienic process connection[a]
			(7)	**Protection tube material**
x	x	24		Stainless steel 316 L (material-no. 1.4404/1.4435)
x	x	26		Stainless steel 316 Ti (material-no. 1.4571) (upon request)
			(8)	**Extra code**
x	x	000		None
x	x	058		SIL and PL-compatible
x	x	305		Without extension tube (only with process connections 104 and 380)
x		320		Terminal head form BUZ
x		321		Terminal head form BUZH
x	x	330		1× analog transmitter, output 4 to 20 mA[b], data sheet 707030 (only for measuring insert 1× Pt100 in two-wire or three-wire circuit, not in conjunction with extra code 058)
x	x	331		1× programmable transmitter, output 4 to 20 mA/20 to 4 mA[c], data sheet 707010 (only for measuring insert 1× Pt100, not in conjunction with extra code 058)
x	x	333		1× analog transmitter, output 0 to 10 V[b], data sheet 707030 (only for measuring insert 1× Pt100 in two-wire or three-wire circuit, not in conjunction with extra code 058)

JUMO GmbH & Co. KG
Delivery address: Mackenrodtstraße 14
36039 Fulda, Germany
Postal address: 36035 Fulda, Germany
Phone: +49 661 6003-0
Fax: +49 661 6003-607
Email: mail@jumo.net
Internet: www.jumo.net

JUMO Instrument Co. Ltd.
JUMO House
Temple Bank, Riverway
Harlow, Essex, CM20 2DY, UK
Phone: +44 1279 63 55 33
Fax: +44 1279 62 50 29
Email: sales@jumo.co.uk
Internet: www.jumo.co.uk

JUMO Process Control, Inc.
6733 Myers Road
East Syracuse, NY 13057, USA
Phone: +1 315 437 5866
Fax: +1 315 437 5860
Email: info.us@jumo.net
Internet: www.jumousa.com

x	x	365	Inspection certificate 3.1 DIN EN 10204 (insulation resistance)
x	x	367	Inspection certificate 3.1 DIN EN 10204 (pressure test)
x	x	368	Inspection certificate 3.1 DIN EN 10204 (leakage test)
x	x	374	Inspection certificate 3.1 DIN EN 10204 (material)
	x	425	Cable screw connection made of stainless steel
x	x	452	Wetted, electrolytically polished parts, surface roughness Ra ≤ 0.8 µm (not for process connections 104, 681, 682, and 840)
x	x	550	1× programmable transmitter, output 4 to 20 mA/20 to 4 mA[c] (USB), data sheet 707050 (only for measuring insert 1× Pt100, not in conjunction with extra code 058)
x	x	810	Welding socket G 1/2 (only for process connection 380 and protection tube material 24)

[a] For corresponding process connection adapter, see data sheet 409711
[b] Specify measuring range in plain text.
[c] Specify measuring range and output signal in plain text.

	(1)		(2)		(3)		(4)		(5)		(6)		(7)		(8)	
Order code		-		-		-		-		-		-		/		, ...[a]
Order example	902810/13	-	1001	-	2	-	6	-	100	-	380	-	24	/	000	

[a] List extra codes in sequence, separated by commas.

JUMO GmbH & Co. KG
Delivery address: Mackenrodtstraße 14
36039 Fulda, Germany
Postal address: 36035 Fulda, Germany
Phone: +49 661 6003-0
Fax: +49 661 6003-607
Email: mail@jumo.net
Internet: www.jumo.net

JUMO Instrument Co. Ltd.
JUMO House
Temple Bank, Riverway
Harlow, Essex, CM20 2DY, UK
Phone: +44 1279 63 55 33
Fax: +44 1279 62 50 29
Email: sales@jumo.co.uk
Internet: www.jumo.co.uk

JUMO Process Control, Inc.
6733 Myers Road
East Syracuse, NY 13057, USA
Phone: +1 315 437 5866
Fax: +1 315 437 5860
Email: info.us@jumo.net
Internet: www.jumousa.com

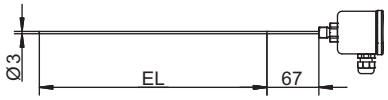

			(1)	**Basic type**
		902810/40		RTD temperature probe for the food/pharmaceutical industry with terminal head form B and adaptation system for thermowell 902812/10 (please select associated thermowells in data sheet 902812)
		902810/41		RTD temperature probe for the food/pharmaceutical industry with stainless steel terminal head and adaptation system for thermowell 902812/10 (please select associated thermowells in data sheet 902812)
			(2)	**Measuring insert**
x	x	1003		1 × Pt100 in two-wire circuit
x	x	1011		1 × Pt100 in four-wire circuit
x	x	2003		2× Pt100 in two-wire circuit
			(3)	**Tolerance class according to DIN EN 60751**
x	x	2		Class A (standard)
x	x	3		Class AA
			(4)	**Protection tube diameter D in mm**
x	x	3		Ø 3 mm
			(5)	**Insertion length EL in mm** (The dimension EL must be identical to that of the selected hygienic thermowell 902812/10, data sheet 902812)
x	x	50		50 mm
x	x	100		100 mm
x	x	150		150 mm
			(6)	**Process connection**
x	x	120		Screw connection M14 × 1 for adapting hygienic thermowells
			(7)	**Protection tube material**
x	x	20		Stainless steel
			(8)	**Extra code**
x	x	000		None
x	x	058		SIL and PL-compatible
x		320		Terminal head form BUZ
x		321		Terminal head form BUZH
x	x	330		1× analog transmitter, output 4 to 20 mA[a], data sheet 707030 (only for measuring insert 1× Pt100 in two-wire or three-wire circuit, not in conjunction with extra code 058)
x	x	331		1× programmable transmitter, output 4 to 20 mA/20 to 4 mA[b], data sheet 707010 (only for measuring insert 1× Pt100, not in conjunction with extra code 058)
x	x	333		1× analog transmitter, output 0 to 10 V[a], data sheet 707030 (only for measuring insert 1× Pt100 in two-wire or three-wire circuit, not in conjunction with extra code 058)
	x	425		Cable screw connection made of stainless steel
x	x	550		1× programmable transmitter, output 4 to 20 mA/20 to 4 mA[b] (USB), data sheet 707050 (only for measuring insert 1× Pt100, not in conjunction with extra code 058)

[a] Specify measuring range in plain text.
[b] Specify measuring range and output signal in plain text.

	(1)		(2)		(3)		(4)		(5)		(6)		(7)		(8)	
Order code	[ ]	-	[ ]	-	[ ]	-	[ ]	-	[ ]	-	[ ]	-	[ ]	/	[ ]	, ...[a]
Order example	902810/40	-	1003	-	2	-	3	-	50	-	120	-	20	/	000	

[a] List extra codes in sequence, separated by commas.

JUMO GmbH & Co. KG
Delivery address: Mackenrodtstraße 14
36039 Fulda, Germany
Postal address: 36035 Fulda, Germany
Phone: +49 661 6003-0
Fax: +49 661 6003-607
Email: mail@jumo.net
Internet: www.jumo.net

JUMO Instrument Co. Ltd.
JUMO House
Temple Bank, Riverway
Harlow, Essex, CM20 2DY, UK
Phone: +44 1279 63 55 33
Fax: +44 1279 62 50 29
Email: sales@jumo.co.uk
Internet: www.jumo.co.uk

JUMO Process Control, Inc.
6733 Myers Road
East Syracuse, NY 13057, USA
Phone: +1 315 437 5866
Fax: +1 315 437 5860
Email: info.us@jumo.net
Internet: www.jumousa.com

Stock versions

Order code	Part no.
902810/20-1001-2-6-25-380-24/452	00466457
902810/20-1001-2-6-100-380-24/452	00381830
902810/20-1001-2-6-25-611-24/452	00407336
902810/20-1001-2-6-25-613-24/452	00405849

Accessories for transmitter type 707014 (data sheet 707010)

Description	Part no.
Setup program, multilingual	00605080
PC interface with USB/TTL converter	00456352

Accessories for transmitter type 707050 (data sheet 707050)

Description	Part no.
Setup program, multilingual	00574959
USB cable, A connector to Mini-B connector, length 3 m	00506252

JUMO GmbH & Co. KG
Delivery address: Mackenrodtstraße 14
36039 Fulda, Germany
Postal address: 36035 Fulda, Germany
Phone: +49 661 6003-0
Fax: +49 661 6003-607
Email: mail@jumo.net
Internet: www.jumo.net

JUMO Instrument Co. Ltd.
JUMO House
Temple Bank, Riverway
Harlow, Essex, CM20 2DY, UK
Phone: +44 1279 63 55 33
Fax: +44 1279 62 50 29
Email: sales@jumo.co.uk
Internet: www.jumo.co.uk

JUMO Process Control, Inc.
6733 Myers Road
East Syracuse, NY 13057, USA
Phone: +1 315 437 5866
Fax: +1 315 437 5860
Email: info.us@jumo.net
Internet: www.jumousa.com

Hygienic thermowells

for temperature probes used in the food and pharmaceutical industry

- Rapid response times
- Hygienic process connections
- Reduced servicing and maintenance costs
- Fast and unlimited exchange of the temperature probe
- Easy cleaning
- High process reliability

Brief description

The hygienic thermowells have been designed for use with standard temperature probes in the food and pharmaceutical industry. This includes the temperature probes from the product groups 902810, 902815, and 902940.

All common process connections within the industry such as clamping sockets (clamp), VARIVENT® connection, aseptic screw connections in accordance with DIN 11864-1 Form A, and the CIP-compliant conical seal are available as a thermowell. The standard material is stainless steel 316 L with the surface finish $R_a \leq 0.8$ µm in the area in contact with the medium (except for the thread and weld seams).

A surface finish of $R_a \leq 0.4$ µm is also available as an optional extra. The wide variety of process connections makes the system versatile and usable in every application.

The use of hygienic thermowells hygienically seals the process. Easy replacement of the temperature probe is guaranteed without interrupting the process. This way, maintenance and repair costs can be reduced.

Inspection certificate:
3.1, please specify when ordering if required.

JUMO GmbH & Co. KG
Delivery address: Mackenrodtstraße 14
36039 Fulda, Germany
Postal address: 36035 Fulda, Germany
Phone: +49 661 6003-0
Fax: +49 661 6003-607
Email: mail@jumo.net
Internet: www.jumo.net

JUMO Instrument Co. Ltd.
JUMO House
Temple Bank, Riverway
Harlow, Essex, CM20 2DY, UK
Phone: +44 1279 63 55 33
Fax: +44 1279 62 50 29
Email: sales@jumo.co.uk
Internet: www.jumo.co.uk

JUMO Process Control, Inc.
6733 Myers Road
East Syracuse, NY 13057, USA
Phone: +1 315 437 5866
Fax: +1 315 437 5860
Email: info.us@jumo.net
Internet: www.jumousa.com

Technical data

General information

Operating temperature	Max. -50 to +260 °C; depending on the process connection As a basic principle, the operating temperature ranges of the temperature probes apply. Furthermore, the seal used by the customer may restrict the operating temperature range.
Material	Thermowell with stainless steel 316 L process connection, material-no. 1.4404 or 1.4435 for process connections 611 to 617 clamping socket (clamp)
Insertion lengths	50, 100, or 150 mm
Process connections	Screw connection G 1/2, screw connection G 1/2 with CIP-compliant conical seal, weld-in sleeve, aseptic screw connections, taper socket with union nut (dairy pipe fitting), clamping socket (clamp), ball welding socket with threaded fitting, VARIVENT®[a] connection, NEUMO BioControl®[b], and ball welding sleeve
Surface finish	Standard surface roughness $R_a \leq 0.8$ µm in the area in contact with the medium (except for the thread and weld seams); $R_a \leq 0.4$ µm available as an optional extra for clamping socket (clamp) (area in contact with the medium, except for the weld seams)
Response times	$t_{0.5}$ = 3 s, $t_{0.9}$ = 8 s; in water 0.4 m/s

[a] VARIVENT® is a registered trademark of GEA Tuchenhagen.
[b] NEUMO BioControl® is a registered trademark of NEUMO.

Process connections

Process connection PA	000	103 and 104	380	400	550 to 554	601 to 605
Protection fitting material	1.4404					
Operating temperature in °C[a]	-50 to +260					
Admissible pressure in bar	-	40	16	[b]	According to DIN 11864[c]	According to DIN 11851[c]
Process connection PA	611 to 617	681	684 to 686	755 to 758	840	
Protection fitting material	1.4435[d]	1.4404				
Operating temperature in °C[a]	-50 to +260	-50 to +200	-50 to +260	-10 to +200	-50 to +260	
Admissible pressure in bar	According to DIN 32676[c]	[a]	10	16	[b]	

[a] depending on the seal used
[b] $p_{max.}$ is dependent on the welding process
[c] The admissible pressures are designed for an operating temperature range of -10 to +140 °C given use of suitable clamps and sealing materials.
[d] According to Basler Norm II

The maximum possible process pressure depends on different influences, e.g. design type, process connection, and process temperature.

JUMO GmbH & Co. KG
Delivery address: Mackenrodtstraße 14
36039 Fulda, Germany
Postal address: 36035 Fulda, Germany
Phone: +49 661 6003-0
Fax: +49 661 6003-607
Email: mail@jumo.net
Internet: www.jumo.net

JUMO Instrument Co. Ltd.
JUMO House
Temple Bank, Riverway
Harlow, Essex, CM20 2DY, UK
Phone: +44 1279 63 55 33
Fax: +44 1279 62 50 29
Email: sales@jumo.co.uk
Internet: www.jumo.co.uk

JUMO Process Control, Inc.
6733 Myers Road
East Syracuse, NY 13057, USA
Phone: +1 315 437 5866
Fax: +1 315 437 5860
Email: info.us@jumo.net
Internet: www.jumousa.com

Dimensions

The different design types of the hygienic thermowell shown on the right can be combined with the temperature probes shown on the left.

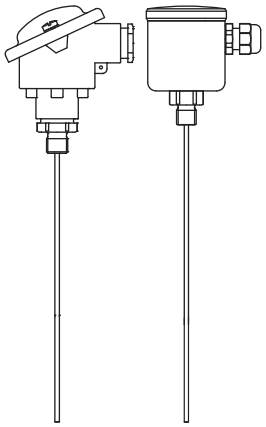

Basic type 902810/40 and .../41,
Data sheet 902810

+

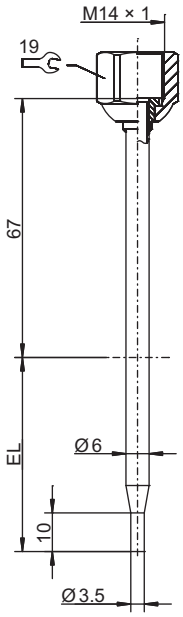

Basic type 902812/10
with process connection
PA 000

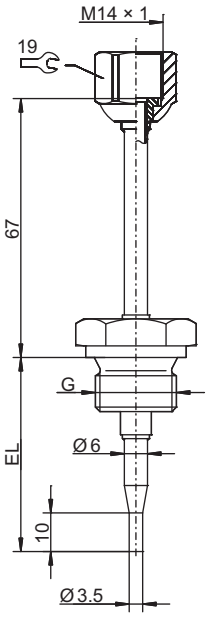

Basic type 902812/10
with process connection
PA 103 or 104

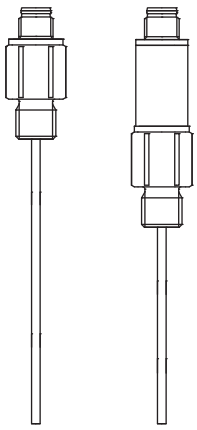

Basic type 902815/40 and .../41,
Data sheet 902815

+

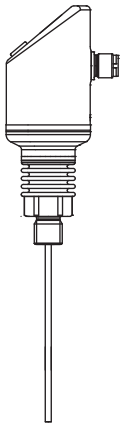

Basic type 902940/40,
Data sheet 902940

+

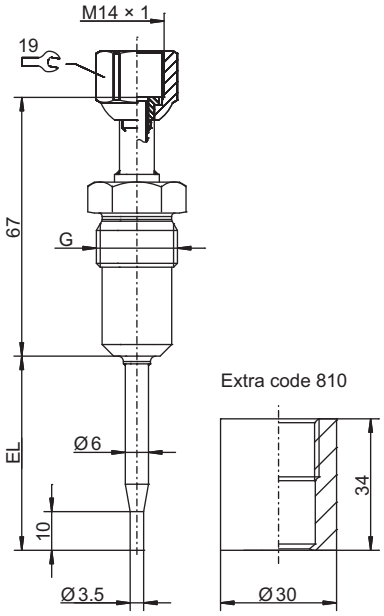

Basic type 902812/10
with process connection
PA 380

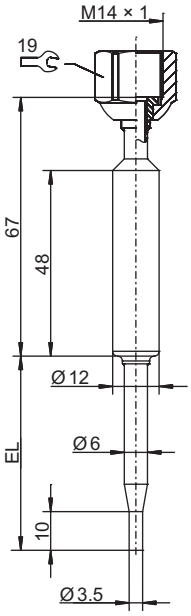

Basic type 902812/10
with process connection
PA 400

JUMO GmbH & Co. KG
Delivery address: Mackenrodtstraße 14
36039 Fulda, Germany
Postal address: 36035 Fulda, Germany
Phone: +49 661 6003-0
Fax: +49 661 6003-607
Email: mail@jumo.net
Internet: www.jumo.net

JUMO Instrument Co. Ltd.
JUMO House
Temple Bank, Riverway
Harlow, Essex, CM20 2DY, UK
Phone: +44 1279 63 55 33
Fax: +44 1279 62 50 29
Email: sales@jumo.co.uk
Internet: www.jumo.co.uk

JUMO Process Control, Inc.
6733 Myers Road
East Syracuse, NY 13057, USA
Phone: +1 315 437 5866
Fax: +1 315 437 5860
Email: info.us@jumo.net
Internet: www.jumousa.com

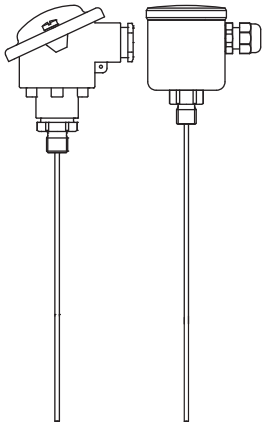

Basic type 902810/40 and .../41,
Data sheet 902810

+

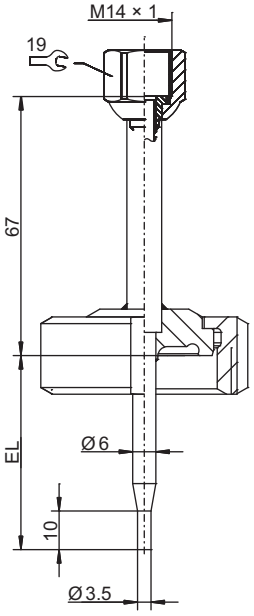

Basic type 902812/10
with process connection
PA 550 to 554

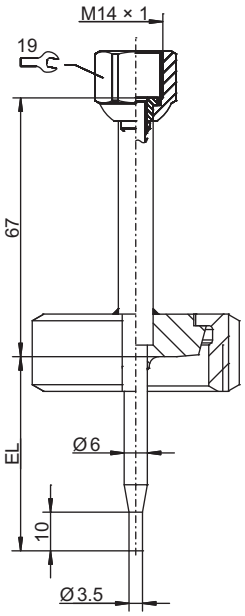

Basic type 902812/10
with process connection
PA 601 to 605

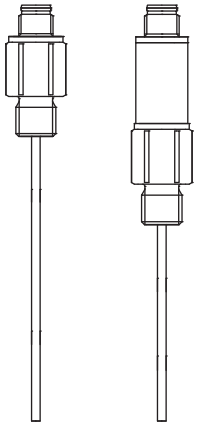

Basic type 902815/40 and .../41,
Data sheet 902815

+

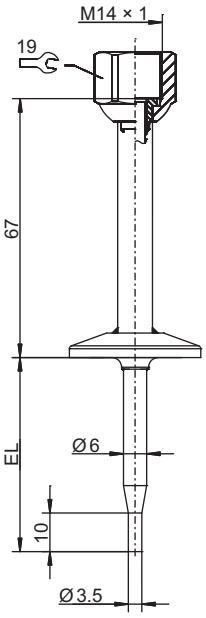

Basic type 902812/10
with process connection
PA 611 to 617

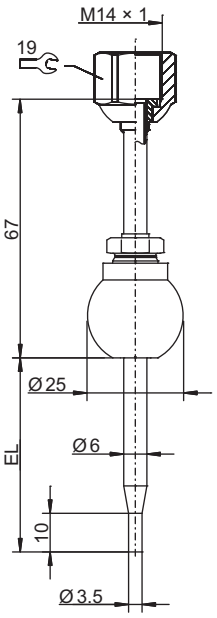

Basic type 902812/10
with process connection
PA 681

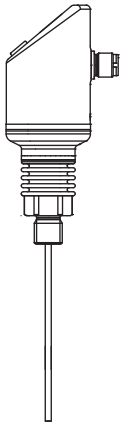

Basic type 902940/40,
Data sheet 902940

+

JUMO GmbH & Co. KG
Delivery address: Mackenrodtstraße 14
36039 Fulda, Germany
Postal address: 36035 Fulda, Germany
Phone: +49 661 6003-0
Fax: +49 661 6003-607
Email: mail@jumo.net
Internet: www.jumo.net

JUMO Instrument Co. Ltd.
JUMO House
Temple Bank, Riverway
Harlow, Essex, CM20 2DY, UK
Phone: +44 1279 63 55 33
Fax: +44 1279 62 50 29
Email: sales@jumo.co.uk
Internet: www.jumo.co.uk

JUMO Process Control, Inc.
6733 Myers Road
East Syracuse, NY 13057, USA
Phone: +1 315 437 5866
Fax: +1 315 437 5860
Email: info.us@jumo.net
Internet: www.jumousa.com

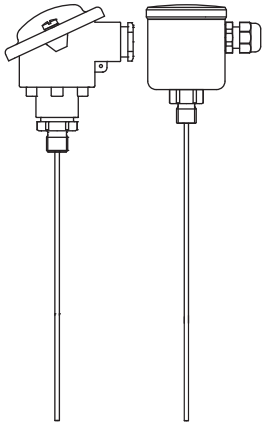

Basic type 902810/40 and .../41,
Data sheet 902810

+

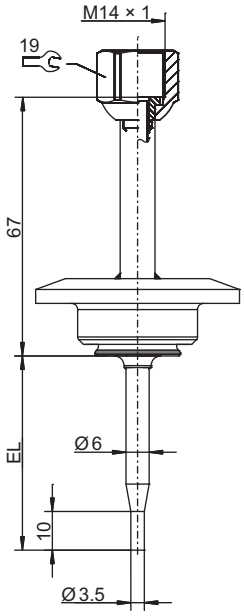

Basic type 902812/10
with process connection
PA 684 to 686

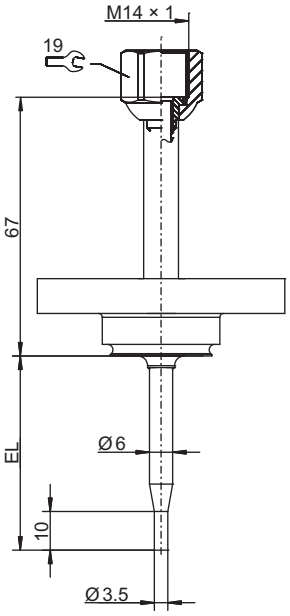

Basic type 902812/10
with process connection
PA 755 to 758

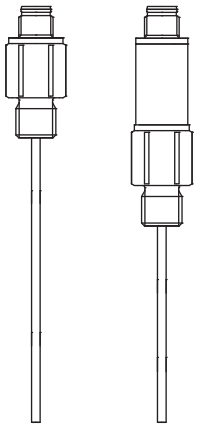

Basic type 902815/40 and .../41,
Data sheet 902815

+

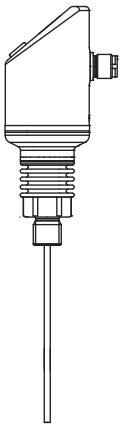

Basic type 902940/40,
Data sheet 902940

+

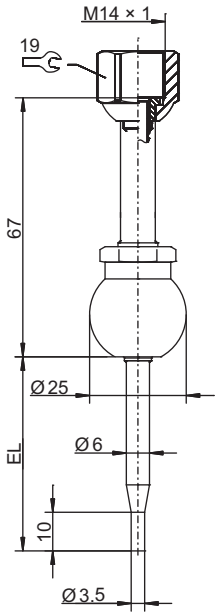

Basic type 902812/10
with process connection
PA 840

JUMO GmbH & Co. KG
Delivery address: Mackenrodtstraße 14
36039 Fulda, Germany
Postal address: 36035 Fulda, Germany
Phone: +49 661 6003-0
Fax: +49 661 6003-607
Email: mail@jumo.net
Internet: www.jumo.net

JUMO Instrument Co. Ltd.
JUMO House
Temple Bank, Riverway
Harlow, Essex, CM20 2DY, UK
Phone: +44 1279 63 55 33
Fax: +44 1279 62 50 29
Email: sales@jumo.co.uk
Internet: www.jumo.co.uk

JUMO Process Control, Inc.
6733 Myers Road
East Syracuse, NY 13057, USA
Phone: +1 315 437 5866
Fax: +1 315 437 5860
Email: info.us@jumo.net
Internet: www.jumousa.com

Order details

		(1)	**Basic type**
	902812/10		Hygienic thermowell for temperature probes in the food and pharmaceutical industry with internal thread M14 × 1
		(2)	**Protection tube diameter**
x	6		Outer diameter stepped down from 6 mm to 3.5 mm
		(3)	**Insertion length EL in mm (50 to 150 mm in 50-mm steps, no intermediate sizes)**
x	50		50 mm
x	100		100 mm
x	150		150 mm
		(4)	**Process connection PA**
x	000		None
x	103		Screw connection G 3/8 (not electropolished)
x	104		Screw connection G 1/2 (not electropolished)
x	380		Screw connection G 1/2 with CIP-compliant conical seal
x	400		Weld-in sleeve
x	550		Aseptic screw connection DN 20 DIN 11864-1 Form A
x	551		Aseptic screw connection DN 25 DIN 11864-1 Form A
x	552		Aseptic screw connection DN 32 DIN 11864-1 Form A
x	553		Aseptic screw connection DN 40 DIN 11864-1 Form A
x	554		Aseptic screw connection DN 50 DIN 11864-1 Form A
x	601		Taper socket with union nut DN 10 DIN 11851 (dairy pipe fitting)
x	604		Taper socket with union nut DN 25 DIN 11851 (dairy pipe fitting)
x	605		Taper socket with union nut DN 32 DIN 11851 (dairy pipe fitting)
x	611		Clamping socket (clamp) DN 10/20 DIN 32676
x	613		Clamping socket (clamp) DN 25/40 (1"/1.5") DIN 32676
x	616		Clamping socket (clamp) DN 50 (2") DIN 32676
x	617		Clamping socket (clamp) DN 2.5" DIN 32676
x	681		Ball welding socket with threaded fitting
x	684		VARIVENT® connection DN 15/10
x	685		VARIVENT® connection DN 32/25
x	686		VARIVENT® connection DN 50/40
x	755		NEUMO BioControl® D25
x	756		NEUMO BioControl® D50
x	757		NEUMO BioControl® D65
x	758		NEUMO BioControl® D80
x	840		Ball welding sleeve
		(5)	**Protection tube material**
x	24		Stainless steel 316 L (material-no. 1.4404)
		(6)	**Extra codes**
x	000		None
x	374		Inspection certificate 3.1 DIN EN 10204 (material)
x	458		Surface roughness R_a ≤ 0.4 µm for clamping socket (clamp) (area in contact with the medium)
x	810		Welding socket (only for process connection 380)

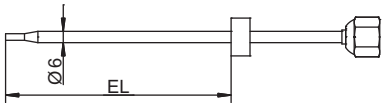

	(1)		(2)		(3)		(4)		(5)		(6)	
Order code		-		-		-		-		/		, ...[a]
Order example	902812/10	-	6	-	50	-	380	-	24	/	000	

[a] List extra codes in sequence and separate using commas.

JUMO GmbH & Co. KG
Delivery address: Mackenrodtstraße 14
36039 Fulda, Germany
Postal address: 36035 Fulda, Germany
Phone: +49 661 6003-0
Fax: +49 661 6003-607
Email: mail@jumo.net
Internet: www.jumo.net

JUMO Instrument Co. Ltd.
JUMO House
Temple Bank, Riverway
Harlow, Essex, CM20 2DY, UK
Phone: +44 1279 63 55 33
Fax: +44 1279 62 50 29
Email: sales@jumo.co.uk
Internet: www.jumo.co.uk

JUMO Process Control, Inc.
6733 Myers Road
East Syracuse, NY 13057, USA
Phone: +1 315 437 5866
Fax: +1 315 437 5860
Email: info.us@jumo.net
Internet: www.jumousa.com

JUMO Dtrans T100

Screw-in RTD Temperature Probe with/without Transmitter

- For temperatures between -50 and +260 °C
- RoHS conformity for EU and China
- Configuration with setup program via USB interface
- M12 × 1 plug connector; protection type IP67 according to DIN EN 60529 with inserted machine connector

The screw-in RTD temperature probe in compact design type comprises a protection tube with integrated temperature sensor, a process connection, and an additional case for the transmitter electronics. The integrated programmable two-wire transmitter converts the resistance value into a current signal.
The screw-in RTD temperature probe with programmable two-wire transmitter is used to measure temperatures from -50 °C to +150 °C (-58 °F to +302 °F), with extension tube up to 260 °C (500 °F) (without transmitter: -50 °C to +200 °C or -58 °F to +392 °F).
The measuring range, fine adjustment, or the measuring circuit monitoring etc. can be configured with a setup program.
The output signal 4 to 20 mA or reversed 20 to 4 mA is available in a linearized way (temperature linear). The device is designed for industrial applications and complies with the respective European standards to guarantee electromagnetic compatibility (EMC).
The transmitter must be protected from temperatures above 85 °C!

Also available as an ATEX/IECEx RTD temperature probe upon request.

Approvals/approval marks (see "Technical data")

JUMO GmbH & Co. KG
Delivery address: Mackenrodtstraße 14
36039 Fulda, Germany
Postal address: 36035 Fulda, Germany
Phone: +49 661 6003-0
Fax: +49 661 6003-607
Email: mail@jumo.net
Internet: www.jumo.net

JUMO Instrument Co. Ltd.
JUMO House
Temple Bank, Riverway
Harlow, Essex, CM20 2DY, UK
Phone: +44 1279 63 55 33
Fax: +44 1279 62 50 29
Email: sales@jumo.co.uk
Internet: www.jumo.co.uk

JUMO Process Control, Inc.
6733 Myers Road
East Syracuse, NY 13057, USA
Phone: +1 315 437 5866
Fax: +1 315 437 5860
Email: info.us@jumo.net
Internet: www.jumousa.com

Technical data

Electrical connection	Machine connector M12 × 1, 4-pin according to IEC 60947-5-2
Process connections	Screw connection G 3/8 Screw connection G 1/2 Screw connection G 1/2 with CIP-compliant conical seal Taper socket with union nut (dairy compression fitting) Clamping socket (clamp) DIN 32676 Ball welding socket with threaded fitting Welding socket with CIP-compliant conical seal VARIVENT®[a] connections Ball welding sleeve JUMO PEKA hygienic process connection
Protection tubes	Stainless steel 316 L material-no. 1.4404/1.4435 Stainless steel 316 Ti material-no. 1.4571 (upon request)
Protection type	IP67 according to DIN EN 60529 with inserted machine connector
Response times	Standard protection tube $t_{0.5}$ = 5 s; $t_{0.9}$ = 12 s; in water 0.4 m/s Stepped down protection tube $t_{0.5}$ = 2 s; $t_{0.9}$ = 5 s; in water 0.4 m/s Standard protection tube $t_{0.5}$ = 40 s; $t_{0.9}$ = 110 s; in air 3.0 m/s Stepped down protection tube $t_{0.5}$ = 21 s; $t_{0.9}$ = 70 s; in air 3.0 m/s

[a] VARIVENT® is a registered trademark of GEA Tuchenhagen.

Technical data (general)

Input

Measuring input	
Without transmitter	Pt100 or Pt1000 temperature sensor, DIN EN 60751, class A, B, and/or AA, two or four-wire circuit
With programmable transmitter	Pt1000 temperature sensor, DIN EN 60751, class A, four-wire circuit
Measuring ranges	
Basic type 902815/10 and 902815/40	-50 to +200 °C
Basic type 902815/20	-50 to +150 °C
Basic type 902815/21 and 902815/41	-50 to +260 °C with extension tube
Limit deviations in °C	Class A (standard): ±(0.15 + 0.002 × |t|) °C[a] Class AA: ±(0.10 + 0.0017 × |t|) °C[a] Class B: ±(0.30 + 0.005 × |t|) °C[a]

[a] |t| = temperature in °C regardless of the prefix.

Environmental influences

Ambient temperature range of the head	
Basic type 902815/10 and 902815/40	-30 to +90 °C
Basic type 902815/20, 902815/21, and 902815/41	-30 to +85 °C
Storage temperature range	-30 to +90 °C
Resistance to climatic conditions	According to IEC 60068-2-30 (relative humidity ≤ 95 % with condensation)
Vibration resistance	According to IEC 60068-2-6 (according to GL characteristic line)

JUMO GmbH & Co. KG
Delivery address: Mackenrodtstraße 14
36039 Fulda, Germany
Postal address: 36035 Fulda, Germany
Phone: +49 661 6003-0
Fax: +49 661 6003-607
Email: mail@jumo.net
Internet: www.jumo.net

JUMO Instrument Co. Ltd.
JUMO House
Temple Bank, Riverway
Harlow, Essex, CM20 2DY, UK
Phone: +44 1279 63 55 33
Fax: +44 1279 62 50 29
Email: sales@jumo.co.uk
Internet: www.jumo.co.uk

JUMO Process Control, Inc.
6733 Myers Road
East Syracuse, NY 13057, USA
Phone: +1 315 437 5866
Fax: +1 315 437 5860
Email: info.us@jumo.net
Internet: www.jumousa.com

Technical data (transmitter)

Input

Smallest measuring span	10 K
Sampling rate	1 measurement per second
Input filter	Digital filter 1st order, filter constant can be set from 0 to 125 s

Measuring circuit monitoring

Underrange	Linear decrease to 3.8 mA (according to NAMUR recommendation 43)
Overrange	Linear increase to 20.5 mA (according to NAMUR recommendation 43)
Probe short circuit/ probe/cable break	≤ 3.6 mA or ≥ 21.0 mA (configurable)
Current limiting in the event of probe short circuit or probe break	≤ 25 mA

Output

Output signal	Load-independent direct current 4 to 20 mA, 20 to 4 mA
Transmission behavior	Temperature-linear
Maximal burden (R_B)	$R_B = (U_b - 8\ V) \div 23\ mA$, max. 600 Ω
Burden influence	≤ ±0.02 % per 100 Ω[a]
Setting time for temperature changes	≤ 5 s
Setting time after switch-on or reset	≤ 5 s
Electronic measuring accuracy	0.1 K or 0.08 %[b,c]

[a] %-specifications refer to the measuring range end value of 20 mA.
[b] %-specifications refer to the set measuring span; the greater value is valid.
[c] The deviation of the temperature sensor must be added to ensure the measuring accuracy of the transmitter.

Electrical data

Voltage supply (U_b)	DC 8 to 35 V (Pin 1 = +, Pin 3 = -), only use with SELV or PELV supply systems (according to DIN EN 61140)
Protection rating	III (according to DIN EN 61140)
Galvanic isolation	No galvanic isolation between sensor and output
Leakage resistance	> 100 MΩ at DC 100 V measured at room temperature between connection terminals and case
Reverse voltage protection	Yes
Influence of the voltage supply	≤ ±0.01 % per V deviation from 24 V[a]

[a] %-specifications refer to the measuring range end value of 20 mA.

Environmental influences

Ambient temperature influence	≤ ±(15 ppm/K × (measuring range end value + 200) + 50 ppm/K × set measuring range) × Δυ Δυ = deviation of the ambient temperature from the reference temperature
Calibration/reference conditions	DC 24 V at 25 °C ±5 °C (77 °F ±9 °F)
Electromagnetic compatibility (EMC) Interference emission Interference immunity	DIN EN 61326 Class B Industrial requirements

Approvals/approval marks

Approval mark	Testing agency	Certificate/certification number	Inspection basis	Valid for
SIL QUALIFIED PL QUALIFIED	-	-	-	Extra code 058 Basic type 902815/10 and 902815/40 in conjunction with declaration of manufacturer

JUMO GmbH & Co. KG
Delivery address: Mackenrodtstraße 14
36039 Fulda, Germany
Postal address: 36035 Fulda, Germany
Phone: +49 661 6003-0
Fax: +49 661 6003-607
Email: mail@jumo.net
Internet: www.jumo.net

JUMO Instrument Co. Ltd.
JUMO House
Temple Bank, Riverway
Harlow, Essex, CM20 2DY, UK
Phone: +44 1279 63 55 33
Fax: +44 1279 62 50 29
Email: sales@jumo.co.uk
Internet: www.jumo.co.uk

JUMO Process Control, Inc.
6733 Myers Road
East Syracuse, NY 13057, USA
Phone: +1 315 437 5866
Fax: +1 315 437 5860
Email: info.us@jumo.net
Internet: www.jumousa.com

Connection examples with transmitter

Connection example with power supply unit

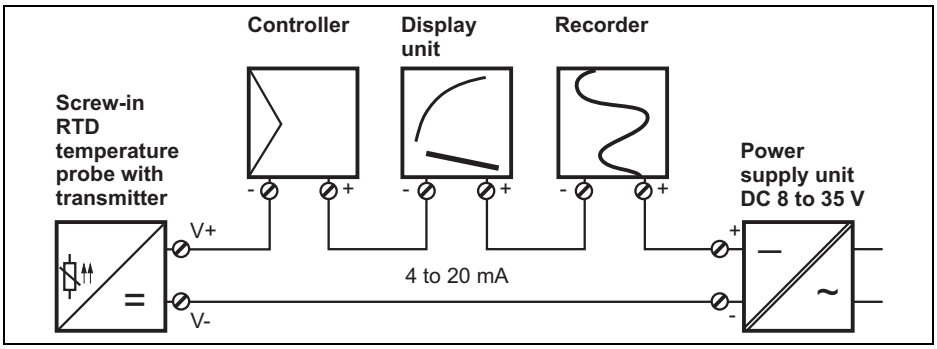

Connection example with supply isolator

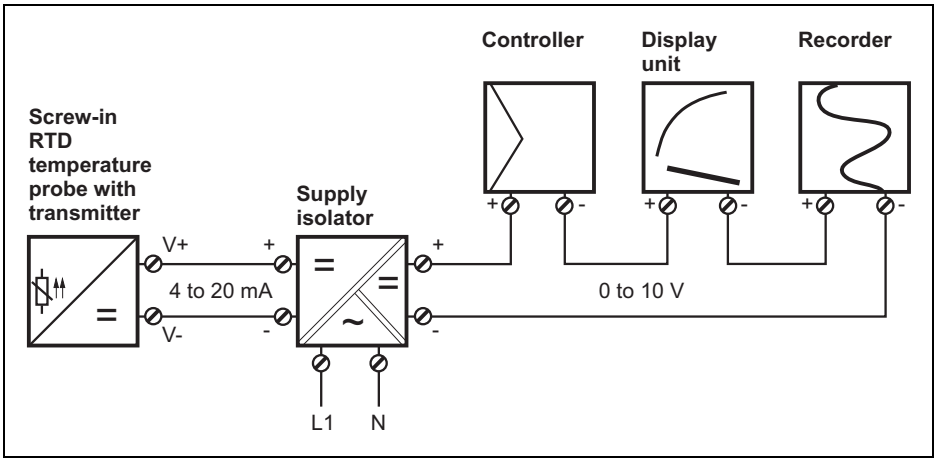

Connection diagram

Machine connector M12 x 1, 4-pin according to IEC 60947-5-2

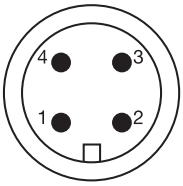

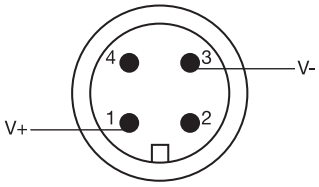

Warning:
Do not connect Pin 2 and 4 to voltage!

Electrical connection	Terminal assignment
Basic type 902815/10 and 902815/40 without transmitter	
Screw-in RTD temperature probe in two-wire circuit	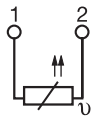
Screw-in RTD temperature probe in four-wire circuit	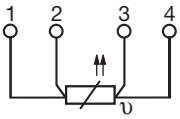
Basic type 902815/20, 902815/21, and 902815/41 with programmable transmitter	
Voltage supply DC 8 to 35 V	 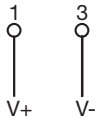
Current output 4 to 20 mA	
Setup communication via special configuration cable (for configuration only, continuous operation is not admissable)	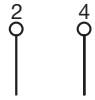

JUMO GmbH & Co. KG
Delivery address: Mackenrodtstraße 14
36039 Fulda, Germany
Postal address: 36035 Fulda, Germany
Phone: +49 661 6003-0
Fax: +49 661 6003-607
Email: mail@jumo.net
Internet: www.jumo.net

JUMO Instrument Co. Ltd.
JUMO House
Temple Bank, Riverway
Harlow, Essex, CM20 2DY, UK
Phone: +44 1279 63 55 33
Fax: +44 1279 62 50 29
Email: sales@jumo.co.uk
Internet: www.jumo.co.uk

JUMO Process Control, Inc.
6733 Myers Road
East Syracuse, NY 13057, USA
Phone: +1 315 437 5866
Fax: +1 315 437 5860
Email: info.us@jumo.net
Internet: www.jumousa.com

Dimensions

Basic types

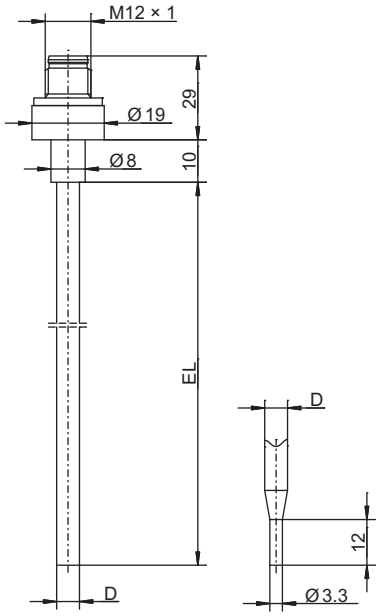

Basic type 902815/10
with process connection PA 000

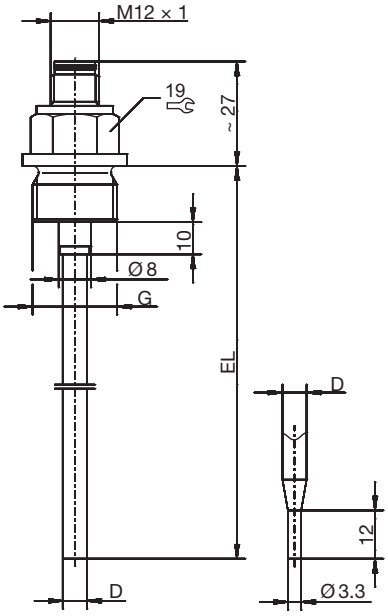

Basic type 902815/10
with process connection PA 104

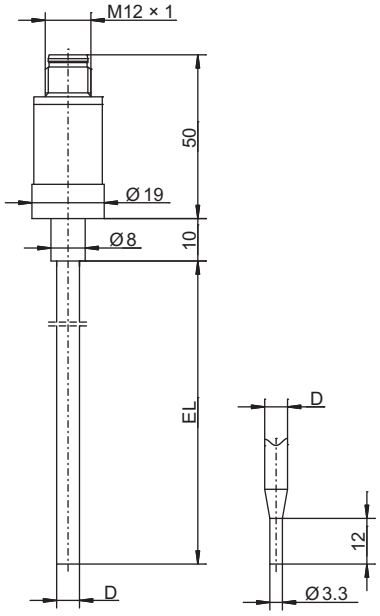

Basic type 902815/20
with process connection PA 000

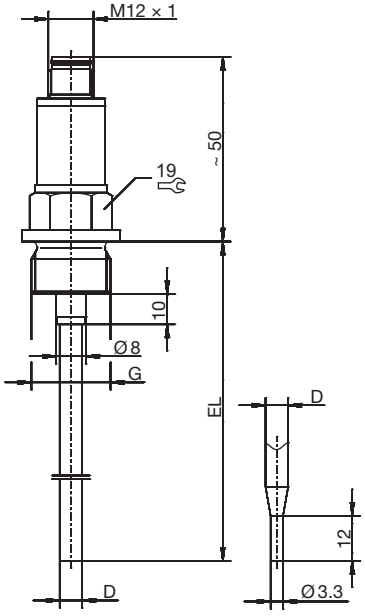

Basic type 902815/20
with process connection PA 104

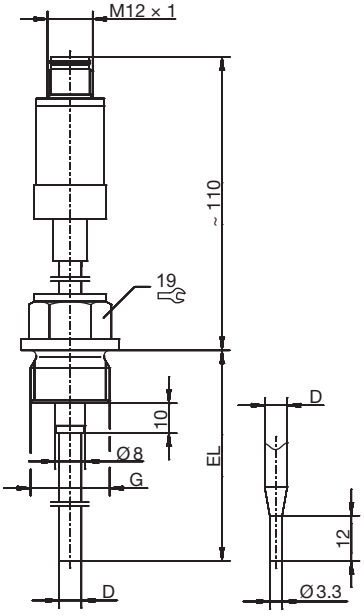

Basic type 902815/21
with process connection PA 104

JUMO GmbH & Co. KG
Delivery address: Mackenrodtstraße 14
36039 Fulda, Germany
Postal address: 36035 Fulda, Germany
Phone: +49 661 6003-0
Fax: +49 661 6003-607
Email: mail@jumo.net
Internet: www.jumo.net

JUMO Instrument Co. Ltd.
JUMO House
Temple Bank, Riverway
Harlow, Essex, CM20 2DY, UK
Phone: +44 1279 63 55 33
Fax: +44 1279 62 50 29
Email: sales@jumo.co.uk
Internet: www.jumo.co.uk

JUMO Process Control, Inc.
6733 Myers Road
East Syracuse, NY 13057, USA
Phone: +1 315 437 5866
Fax: +1 315 437 5860
Email: info.us@jumo.net
Internet: www.jumousa.com

Basic types

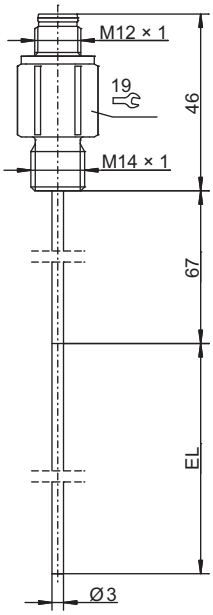

Basic type 902815/40
with process connection PA 120

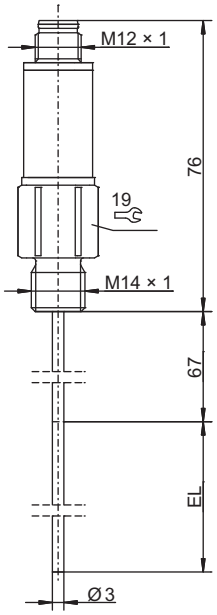

Basic type 902815/41
with process connection PA 120

JUMO GmbH & Co. KG
Delivery address: Mackenrodtstraße 14
36039 Fulda, Germany
Postal address: 36035 Fulda, Germany
Phone: +49 661 6003-0
Fax: +49 661 6003-607
Email: mail@jumo.net
Internet: www.jumo.net

JUMO Instrument Co. Ltd.
JUMO House
Temple Bank, Riverway
Harlow, Essex, CM20 2DY, UK
Phone: +44 1279 63 55 33
Fax: +44 1279 62 50 29
Email: sales@jumo.co.uk
Internet: www.jumo.co.uk

JUMO Process Control, Inc.
6733 Myers Road
East Syracuse, NY 13057, USA
Phone: +1 315 437 5866
Fax: +1 315 437 5860
Email: info.us@jumo.net
Internet: www.jumousa.com

Process connections PA

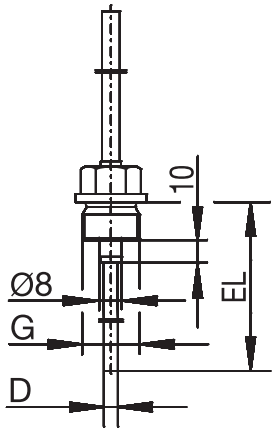

PA	G
103	3/8
104	1/2

Screw connection

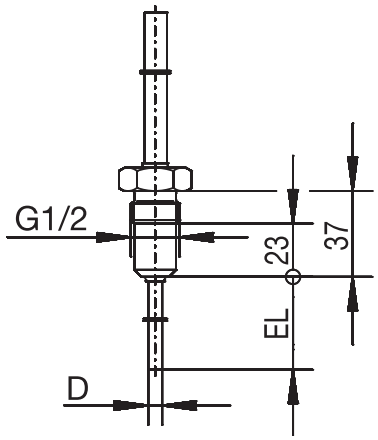

PA	
380	

Screw connection with CIP-compliant conical seal

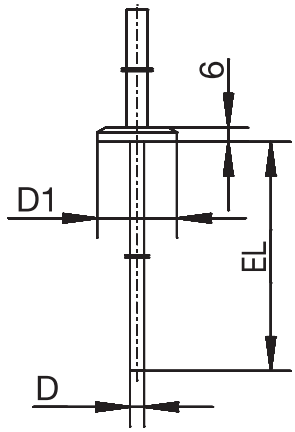

PA	DN	D1
-	-	Ø 25
611	10/20	Ø 34
613	25/1"	Ø 50.5
613	40/1.5"	Ø 50.5
616	50/2"	Ø 64
617	2.5"	Ø 77.5

Clamping socket according to DIN 32676 (clamp)

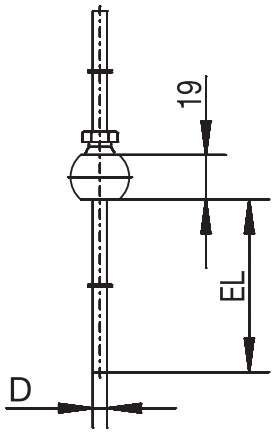

PA	
681	

Ball welding socket with threaded fitting

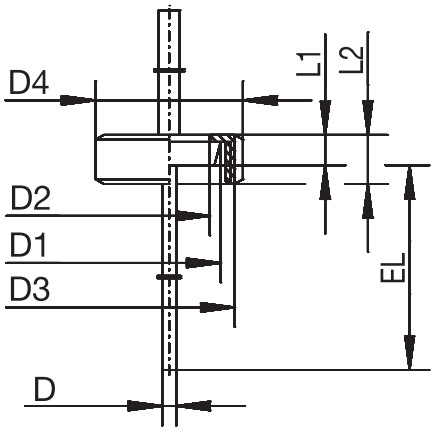

PA	DN	D1	D2	D3	D4	L1	L2
601	10	Ø 22	Ø 18	RD 28×1/8	Ø 38	9	18
604	25	Ø 44	Ø 35	RD 52×1/6	Ø 63	13	21
605	32	Ø 50	Ø 41	RD 58×1/6	Ø 70	13	21

Taper socket with union nut according to DIN 11851 (dairy compression fitting)

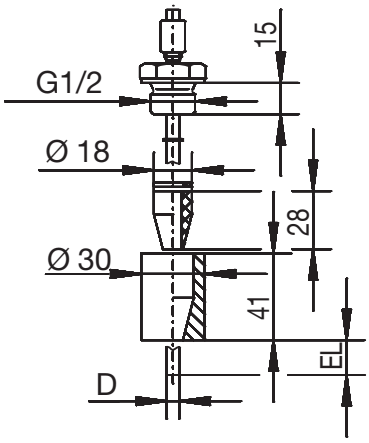

PA	
682	

Welding socket with CIP-compliant conical seal

JUMO GmbH & Co. KG
Delivery address: Mackenrodtstraße 14
36039 Fulda, Germany
Postal address: 36035 Fulda, Germany
Phone: +49 661 6003-0
Fax: +49 661 6003-607
Email: mail@jumo.net
Internet: www.jumo.net

JUMO Instrument Co. Ltd.
JUMO House
Temple Bank, Riverway
Harlow, Essex, CM20 2DY, UK
Phone: +44 1279 63 55 33
Fax: +44 1279 62 50 29
Email: sales@jumo.co.uk
Internet: www.jumo.co.uk

JUMO Process Control, Inc.
6733 Myers Road
East Syracuse, NY 13057, USA
Phone: +1 315 437 5866
Fax: +1 315 437 5860
Email: info.us@jumo.net
Internet: www.jumousa.com

Process connections PA

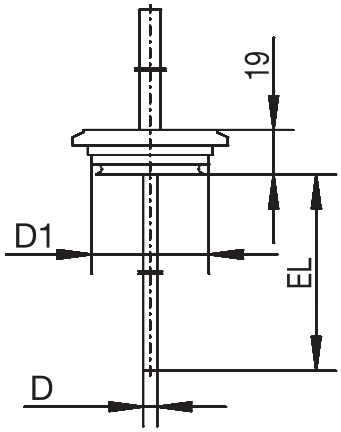

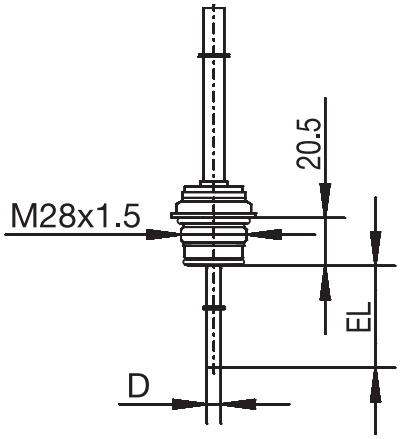

PA	DN	D1
684	15/10	Ø 31
685	32/25	Ø 50
686	50/40	Ø 68

VARIVENT® connection

VARIVENT®	Clamp	Aseptic	Welding socket
DN 25/32	DN 25/32/40	DN 40	Ø 55 mm
DN 40-125	DN 50	DN 50	-
-	-	NKS DN 40	-

JUMO PEKA PA 997
hygienic process connection,
see data sheet 409711

JUMO GmbH & Co. KG
Delivery address: Mackenrodtstraße 14
36039 Fulda, Germany
Postal address: 36035 Fulda, Germany
Phone: +49 661 6003-0
Fax: +49 661 6003-607
Email: mail@jumo.net
Internet: www.jumo.net

JUMO Instrument Co. Ltd.
JUMO House
Temple Bank, Riverway
Harlow, Essex, CM20 2DY, UK
Phone: +44 1279 63 55 33
Fax: +44 1279 62 50 29
Email: sales@jumo.co.uk
Internet: www.jumo.co.uk

JUMO Process Control, Inc.
6733 Myers Road
East Syracuse, NY 13057, USA
Phone: +1 315 437 5866
Fax: +1 315 437 5860
Email: info.us@jumo.net
Internet: www.jumousa.com

Setup program

The setup program is used for the configuration of the programmable two-wire transmitter using a PC.
For this purpose the following is required:

- Please only use the configuration cable, 4-pin with connector and socket M12 × 1, and Western plug RJ-45 with part no. 00484692.
- PVC connecting cable, length 2,000 mm
- PC interface with USB/TTL converter and USB cable

(See also accessories for the programmable two-wire transmitter)

The two-wire transmitter must be connected to a voltage supply for configuration.
If no power supply unit or supply isolator is available, it can also be supplied using a 9 V block battery.

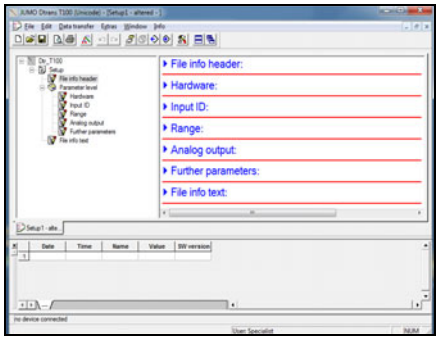

Configurable parameters

Measuring point identification

- TAG number

Measuring range configurable in °C/°F

- Offset
- Measuring range start
- Measuring range end

Analog output

- Reversion of the output
- Signal for probe break/short-circuit

Other parameters

- Filter time constant
- Unit

JUMO GmbH & Co. KG
Delivery address: Mackenrodtstraße 14
36039 Fulda, Germany
Postal address: 36035 Fulda, Germany
Phone: +49 661 6003-0
Fax: +49 661 6003-607
Email: mail@jumo.net
Internet: www.jumo.net

JUMO Instrument Co. Ltd.
JUMO House
Temple Bank, Riverway
Harlow, Essex, CM20 2DY, UK
Phone: +44 1279 63 55 33
Fax: +44 1279 62 50 29
Email: sales@jumo.co.uk
Internet: www.jumo.co.uk

JUMO Process Control, Inc.
6733 Myers Road
East Syracuse, NY 13057, USA
Phone: +1 315 437 5866
Fax: +1 315 437 5860
Email: info.us@jumo.net
Internet: www.jumousa.com

Order details

				(1)	**Basic type**
			902815/10		Screw-in RTD temperature probe without transmitter, connection M12 × 1 machine connector 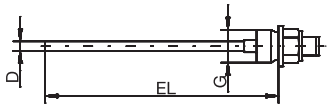
	x		902815/20		Screw-in RTD temperature probe[a] with programmable transmitter[b], connection M12 × 1 machine connector 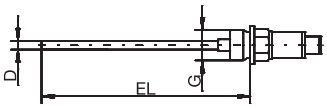
		x	902815/21		Screw-in RTD temperature probe[a] with programmable transmitter[b], connection M12 × 1 machine connector, high temperature version with extension tube 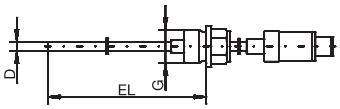
				(2)	**Operating temperature in °C**
	x		370		-50 to +150 °C (max. transmitter temperature 85 °C)
x			380		-50 to +200 °C
		x	386		-50 to +260 °C (max. transmitter temperature 85 °C)
				(3)	**Measuring insert**
x			1003		1× Pt100 in two-wire circuit
x			1005		1× Pt1000 in two-wire circuit
x			1011		1× Pt100 in four-wire circuit
x	x	x	1013		1× Pt1000 in four-wire circuit
x			2003		2× Pt100 in two-wire circuit
x			2005		2× Pt1000 in two-wire circuit
				(4)	**Tolerance class according to DIN EN 60751**
x			1		Class B
x	x	x	2		Class A
x			3		Class AA
				(5)	**Protection tube diameter D in mm**
x	x	x	6		Ø 6 mm
				(6)	**Insertion length EL in mm (EL 50 to 500 mm)**
x	x	x	50		50 mm
x	x	x	100		100 mm
x	x	x	150		150 mm
x	x	x	200		200 mm
x	x	x	...		Please specify in plain text (50 mm increments)
				(7)	**Process connection PA**
x	x		000		Without (for basic type 902815/20 max. transmitter temperature 85 °C)
x	x	x	103		Screw connection G 3/8
x	x	x	104		Screw connection G 1/2
x	x	x	380		Screw connection G 1/2 with CIP-compliant conical seal
x	x	x	601		Taper socket with union nut DN 10 DIN 11851 (dairy compression fitting)
x	x	x	604		Taper socket with union nut DN 25 DIN 11851 (dairy compression fitting)
x	x	x	605		Taper socket with union nut DN 32 DIN 11851 (dairy compression fitting)
x	x	x	611		Clamping socket (clamp) DN 10/20 DIN 32676
x	x	x	613		Clamping socket (clamp) DN 25/40 (1"/1.5") DIN 32676
x	x	x	616		Clamping socket (clamp) DN 50 (2") DIN 32676
x	x	x	617		Clamping socket (clamp) 2.5" similar to DIN 32676
x	x	x	681		Ball welding socket with threaded fitting
x	x	x	682		Welding socket with CIP-compliant conical seal
x	x	x	684		VARIVENT® connection DN 15/10

JUMO GmbH & Co. KG
Delivery address: Mackenrodtstraße 14
36039 Fulda, Germany
Postal address: 36035 Fulda, Germany
Phone: +49 661 6003-0
Fax: +49 661 6003-607
Email: mail@jumo.net
Internet: www.jumo.net

JUMO Instrument Co. Ltd.
JUMO House
Temple Bank, Riverway
Harlow, Essex, CM20 2DY, UK
Phone: +44 1279 63 55 33
Fax: +44 1279 62 50 29
Email: sales@jumo.co.uk
Internet: www.jumo.co.uk

JUMO Process Control, Inc.
6733 Myers Road
East Syracuse, NY 13057, USA
Phone: +1 315 437 5866
Fax: +1 315 437 5860
Email: info.us@jumo.net
Internet: www.jumousa.com

x	x	x	685		VARIVENT® connection DN 32/25
x	x	x	686		VARIVENT® connection DN 50/40
x	x	x	997		JUMO PEKA hygienic process connection
				(8)	**Protection tube material**
x	x	x	24		Stainless steel 316 L (material-no. 1.4404/1.4435)
x	x	x	26		Stainless steel 316 Ti (material-no. 1.4571) (upon request)
				(9)	**Extra code**
x	x	x	000		None
x			058		SIL and PL compatible
	x	x	100		Customer-specific configuration (specifications in plain text)
x	x	x	310		Protection tube stepped down from Ø 6 mm to Ø 3.3 mm
x	x	x	452		Wetted, electrolytically polished parts, surface roughness Ra ≤ 0.8 µm (without thread and welding joints)
x	x	x	810		Welding socket (only for process connection 380)

[a] This JUMO product is licensed under United States and Canadian patents. Purchasers of the JUMO product outside of the United States and Canada should advise JUMO of any planned sales of the product into the United States and Canada.
[b] Specify measuring range in plain text.

	(1)		(2)		(3)		(4)		(5)		(6)		(7)		(8)		(9)	
Order code	[ ]	-	[ ]	-	[ ]	-	[ ]	-	[ ]	-	[ ]	-	[ ]	-	[ ]	/	[ ]	,...[a]
Order example	902815/20	-	370	-	1013	-	1	-	6	-	100	-	104	-	24	/	000	

[a] List extra codes in sequence, separated by commas.

Scope of delivery

1 device in the ordered version
1 operating manual

JUMO GmbH & Co. KG
Delivery address: Mackenrodtstraße 14
36039 Fulda, Germany
Postal address: 36035 Fulda, Germany
Phone: +49 661 6003-0
Fax: +49 661 6003-607
Email: mail@jumo.net
Internet: www.jumo.net

JUMO Instrument Co. Ltd.
JUMO House
Temple Bank, Riverway
Harlow, Essex, CM20 2DY, UK
Phone: +44 1279 63 55 33
Fax: +44 1279 62 50 29
Email: sales@jumo.co.uk
Internet: www.jumo.co.uk

JUMO Process Control, Inc.
6733 Myers Road
East Syracuse, NY 13057, USA
Phone: +1 315 437 5866
Fax: +1 315 437 5860
Email: info.us@jumo.net
Internet: www.jumousa.com

Order details

			(1)	**Basic type**
		902815/40		Screw-in RTD temperature probe without transmitter, connection M12 × 1 machine connector and adaptation system for thermowell 902812/10 (please select associated thermowells in data sheet 902812) 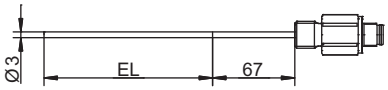
		902815/41		Screw-in RTD temperature probe [a] with programmable transmitter[b], connection M12 × 1 machine connector and adaptation system for thermowell 902812/10 (please select associated thermowells in data sheet 902812) 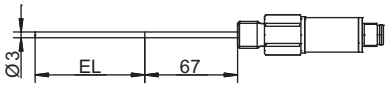
			(2)	**Operating temperature in °C**
x		380		-50 to +200 °C
	x	386		-50 to +260 °C (max. transmitter temperature 85 °C)
			(3)	**Measuring insert**
x		1003		1× Pt100 in two-wire circuit
x		1005		1× Pt1000 in two-wire circuit
x		1011		1× Pt100 in four-wire circuit
x	x	1013		1× Pt1000 in four-wire circuit
x		2003		2× Pt100 in two-wire circuit
x		2005		2× Pt1000 in two-wire circuit
			(4)	**Tolerance class according to DIN EN 60751**
x		1		Class B
x	x	2		Class A
x		3		Class AA
			(5)	**Protection tube diameter D in mm**
x	x	3		Ø 3 mm
			(6)	**Insertion length EL in mm**
x	x	50		50 mm
x	x	100		100 mm
x	x	150		150 mm
			(7)	**Process connection PA**
x	x	120		Screw connection M14 × 1 for adapting hygienic thermowells
			(8)	**Protection tube material**
x	x	20		Stainless steel
			(9)	**Extra code**
x	x	000		None
x		058		SIL and PL compatible
	x	100		Customer-specific configuration (specifications in plain text)

[a] This JUMO product is licensed under United States and Canadian patents. Purchasers of the JUMO product outside of the United States and Canada should advise JUMO of any planned sales of the product into the United States and Canada.
[b] Specify measuring range in plain text.

	(1)		(2)		(3)		(4)		(5)		(6)		(7)		(8)		(9)	
Order code	[ ]	-	[ ]	-	[ ]	-	[ ]	-	[ ]	-	[ ]	-	[ ]	-	[ ]	/	[ ]	,...[a]
Order example	902815/40	-	380	-	1003	-	1	-	3	-	50	-	120	-	20	/	000	

[a] List extra codes in sequence, separated by commas.

Scope of delivery

1 device in the ordered version
1 operating manual

JUMO GmbH & Co. KG
Delivery address: Mackenrodtstraße 14
36039 Fulda, Germany
Postal address: 36035 Fulda, Germany
Phone: +49 661 6003-0
Fax: +49 661 6003-607
Email: mail@jumo.net
Internet: www.jumo.net

JUMO Instrument Co. Ltd.
JUMO House
Temple Bank, Riverway
Harlow, Essex, CM20 2DY, UK
Phone: +44 1279 63 55 33
Fax: +44 1279 62 50 29
Email: sales@jumo.co.uk
Internet: www.jumo.co.uk

JUMO Process Control, Inc.
6733 Myers Road
East Syracuse, NY 13057, USA
Phone: +1 315 437 5866
Fax: +1 315 437 5860
Email: info.us@jumo.net
Internet: www.jumousa.com

Stock versions

Order code	Part no.
902815/10-380-1011-1-6-100-104-24/000	00508463
902815/10-380-1011-3-6-50-104-24/000	00516241
902815/10-380-1011-3-6-150-104-24/000	00516245
902815/10-380-1011-3-6-200-104-24/000	00516246
902815/20-370-1013-2-6-50-104-24/000	00508279
902815/20-370-1013-2-6-100-380-24/452	00513650
902815/20-370-1013-2-6-100-104-24/000	00491506
902815/20-370-1013-2-6-150-000-24/000	00506630
902815/20-370-1013-2-6-200-104-24/000	00503113

Accessories for programmable two-wire transmitter

Description	Part no.
Setup program on CD-ROM, multilingual	00485016
Configuration cable, 4-pin with connector and socket M12 × 1, and Western plug RJ-45	00484692
PVC connecting cable, 4-pin with socket M12 × 1, length 2,000 mm	00404585
5-pin cable socket M12 × 1, straight, without connecting cable to be patched by the customer	00419130
5-pin cable socket M12 × 1, angled, without connecting cable to be patched by the customer	00419133
PC interface with USB/TTL converter and USB cable	00456352
Power supply units for transmitter, 1- and 4-way (data sheet 707500)	-
Isolation amplifier and supply isolator for the galvanic isolation of standard signals and voltage supply for two-wire transmitter (data sheet 707530)	-

JUMO GmbH & Co. KG
Delivery address: Mackenrodtstraße 14, 36039 Fulda, Germany
Postal address: 36035 Fulda, Germany
Phone: +49 661 6003-0
Fax: +49 661 6003-607
e-mail: mail@jumo.net
Internet: www.jumo.net

JUMO Instrument Co. Ltd.
JUMO House
Temple Bank, Riverway
Harlow, Essex CM20 2DY, UK
Phone: +44 1279 635533
Fax: +44 1279 635262
e-mail: sales@jumo.co.uk
Internet: www.jumo.co.uk

JUMO Process Control, Inc.
8 Technology Boulevard
Canastota, NY 13032, USA
Phone: 315-697-JUMO
1-800-554-JUMO
Fax: 315-697-5867
e-mail: info@jumo.us
Internet: www.jumo.us

JUMO PROCESStemp

RTD temperature probe for process technology with ATEX approval

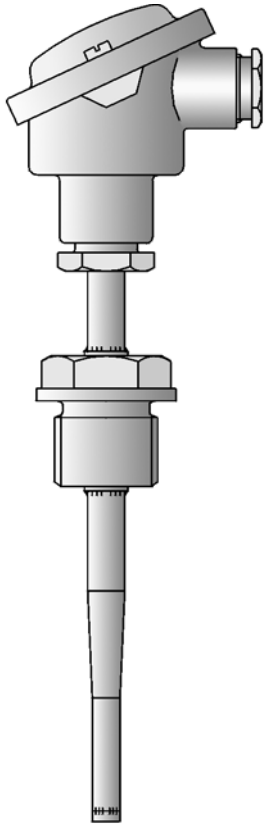

- **For temperatures from -200 to +600 °C**
- **with thermowells made of stainless steel, titanium, tantalum, Inconel and Hastelloy**
- **available with two-wire transmitter (4 to 20 mA/HART®) in Ex version**
- **Ex II 1/2 G Ex ia IIC T1 to T6 (or Ex ib IIC T1 to T6)[1]**
  Ex II 1/2 D Ex iaD 20/21 T80 °C to T400 °C (or ...ib...)[1]
  Ex II 1/2 G Ex d IIC T1 to T6[1]
  Ex II 1/2 D Ex tb A20/21 IP66 T80 °C to T400 °C[1]
- **with replaceable measuring insert (not for ATEX-basic types)**

RTD temperature probes for process technology (chemical and petrochemical plants, pressure vessels, etc.) are preferentially used for measuring temperatures in liquids and gases. These RTD temperature probes consist of a protection fitting per DIN 43763 with various process connection options, a terminal head and a replaceable measuring insert. The protection fitting is made of material 1.4571 as standard. Other materials are available for special applications. All fittings are manufactured in accordance with the pressure vessel regulations and are subjected to a pressure and leakage test. The measuring insert is normally fitted with a Pt100 temperature sensor as per DIN EN 60751, Class B in 2-wire circuit; versions with two Pt100 measuring circuits are also available as well as 3- and 4-wire circuits. An analog or programmable transmitter can be integrated for measurement transmission with a 4 to 20 mA or via the HART® interface. Versions with flameproof enclosure or intrinsic safety are available for temperature measurement in areas with an explosion hazard. For documentation purposes, the device parameters (measurement tolerance, material, etc.) can be certified with a works test certificate.

Push-in and screw-in RTD temperature probes with connecting cable and ATEX approval can be provided on request.

Technical data

Terminal head	Form B DIN 43729, die-cast aluminum, M 20x1.5; IP65, ambient temperature -40 to +100 °C Form BUZ, die-cast aluminum, M 20x1.5; IP65, ambient temperature -40 to +100 °C Form BUZH, die-cast aluminum, M 20x1.5; IP65, ambient temperature -40 to +100 °C Form BBKS, plastic (PA 6), M 20x1.5; IP54, ambient temperature -30 to +130 °C Form BEGF, stainless steel 1.4541, M 20x1.5, IP65, ambient temperature -40 to +100 °C Form XD-AD (EEx d ATEX), die-cast aluminum, M 20x1.5; IP66, ambient temperature -50 to +100 °C Caution: reduced ambient temperature range when using transmitters, data sheets 707010, 707030 and 707060
Extension tube	Stainless steel 1.4571, length 130 mm (150 mm for type 902820/50.../51...)
Process connection	thread, stainless steel 1.4571 flange, stainless steel 1.4571 Sheath, stainless steel 1.4571 or steel 1.7335 highly corrosion-resistant materials/coatings are optionally available
Sheath	Stainless steel 1.4571, Ø 9 mm, Ø 11 mm, Ø 12 mm highly corrosion-resistant materials/coatings are optionally available
Measuring insert	Replaceable, Pt100 temperature probe, DIN EN 60751, class B, 2-wire circuit
Response times	$t_{0.9}$ approx. 50 s, in water 0.4 m/s, Ø 9 mm
Transmitter	analog transmitter, 4 to 20 mA output, data sheet 707030 analog transmitter, 0 to 10 V output, data sheet 707030 programmable transmitter, 4 to 20 mA/20 to 4 mA output, data sheet 707010 programmable transmitter, 4 to 20 mA output and HART® interface, data sheet 707010 Wtrans B programmable head transducer with radio transmission, data sheet 707060 **(do not use in Ex-areas)**, (suitable Wtrans receivers, data sheet 902931)
Accessories	Sheath, data sheet 909710 (909721)
DIN versions	DIN 43765 Form B1, B2, B3, load capacity, see diagram 1 DIN 43766 Form C1, C2, load capacity, see diagram 2 DIN 43767 Form D1, D2, D4, D5, load capacity, see diagram 3 DIN 43771 Form G1, G2, G3, load capacity, see diagram 4

[1] Explosion protection: The maximum product specific explosion protection depends of the RTD temperature probe design. For an exact classification of the RTD temperature probe, please refer to Operating Manual B 90.2820.

JUMO GmbH & Co. KG
Delivery address: Mackenrodtstraße 14, 36039 Fulda, Germany
Postal address: 36035 Fulda, Germany
Phone: +49 661 6003-0
Fax: +49 661 6003-607
e-mail: mail@jumo.net
Internet: www.jumo.net

JUMO Instrument Co. Ltd.
JUMO House
Temple Bank, Riverway
Harlow, Essex CM20 2DY, UK
Phone: +44 1279 635533
Fax: +44 1279 635262
e-mail: sales@jumo.co.uk
Internet: www.jumo.co.uk

JUMO Process Control, Inc.
8 Technology Boulevard
Canastota, NY 13032, USA
Phone: 315-697-JUMO
1-800-554-JUMO
Fax: 315-697-5867
e-mail: info@jumo.us
Internet: www.jumo.us

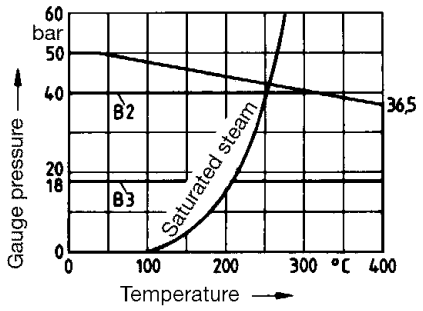

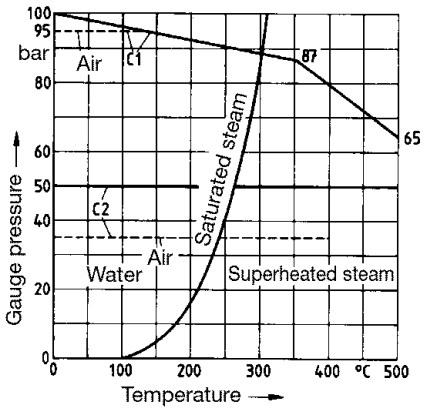

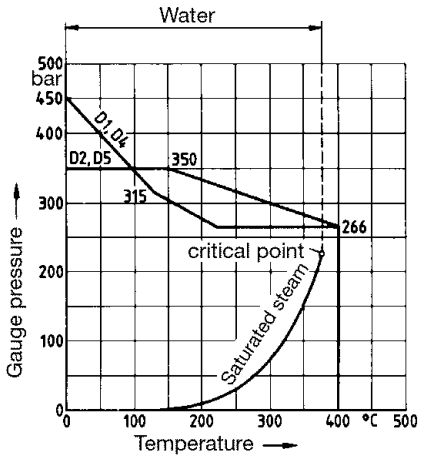

Diagram 1:
Permissible flow velocity
for air and superheated steam: up to 25 m/s
for water: up to 3 m/s
Permissible tightening torque: 50 Nm

Diagram 2:
Permissible flow velocity
for air and superheated steam: up to 40 m/s
for water: up to 5 m/s
Permissible tightening torque: 100 Nm

Diagram 3:
Form D1; D4 permissible flow velocity
for air, water, superheated steam: up to 60 m/s
Form D2; D5 permissible flow velocity
for air: up to 60 m/s
for water, superheated steam: up to 30 m/s

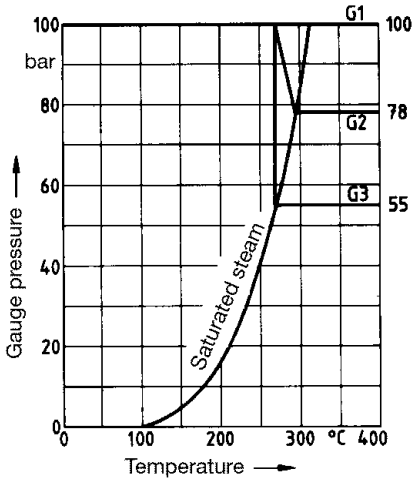

Diagram 4:
Permissible flow velocity
for superheated steam: up to 40 m/s
for water: up to 5 m/s
for air: up to 400 °C

Type	DIN Form	D	L2	EL	Thread
902820/10	B1	9	-	160	G 1/2
902820/10	B2	9	-	250	G 1/2
902820/10	B3	9	-	400	G 1/2
902820/10	C1	11	-	160	G 1
902820/10	C2	11	-	250	G 1
902820/11	G1	9	-	160	G 1

Type	DIN Form	D	L2	EL	Thread
902820/11	G2	9	-	220	G 1
902820/11	G3	9	-	280	G 1
902820/50	D1	12,5	140	65	-
902820/50	D2	12,5	200	125	-
902820/51	D4	12,5	200	65	-
902820/51	D5	12,5	260	125	-

JUMO GmbH & Co. KG
Delivery address: Mackenrodtstraße 14, 36039 Fulda, Germany
Postal address: 36035 Fulda, Germany
Phone: +49 661 6003-0
Fax: +49 661 6003-607
e-mail: mail@jumo.net
Internet: www.jumo.net

JUMO Instrument Co. Ltd.
JUMO House
Temple Bank, Riverway
Harlow, Essex CM20 2DY, UK
Phone: +44 1279 635533
Fax: +44 1279 635262
e-mail: sales@jumo.co.uk
Internet: www.jumo.co.uk

JUMO Process Control, Inc.
8 Technology Boulevard
Canastota, NY 13032, USA
Phone: 315-697-JUMO
1-800-554-JUMO
Fax: 315-697-5867
e-mail: info@jumo.us
Internet: www.jumo.us

Dimensions

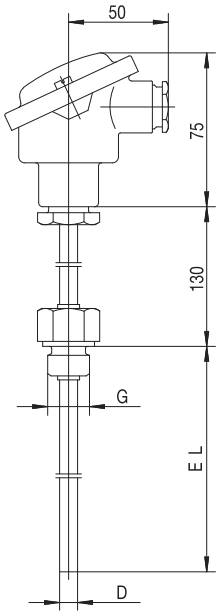

Basic type 902820/10

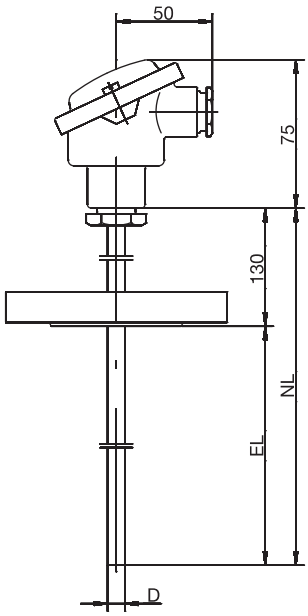

Basic type 902820/20

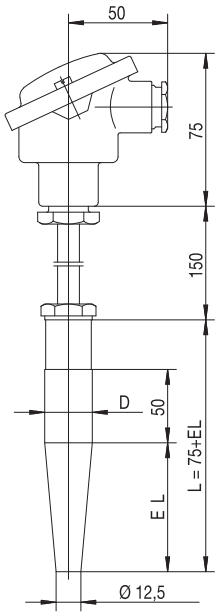

Basic type 902820/50

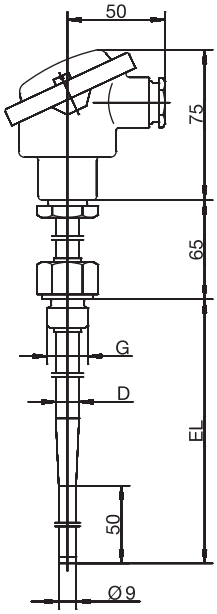

Basic type 902820/11

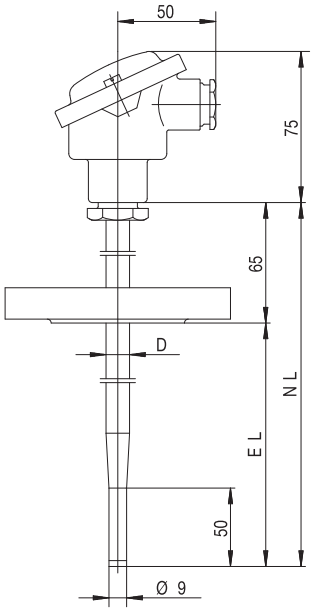

Basic type 902820/21

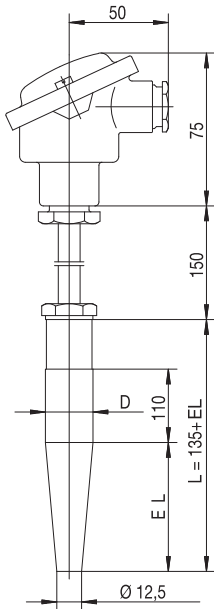

Basic type 902820/51

JUMO GmbH & Co. KG
Delivery address: Mackenrodtstraße 14, 36039 Fulda, Germany
Postal address: 36035 Fulda, Germany
Phone: +49 661 6003-0
Fax: +49 661 6003-607
e-mail: mail@jumo.net
Internet: www.jumo.net

JUMO Instrument Co. Ltd.
JUMO House
Temple Bank, Riverway
Harlow, Essex CM20 2DY, UK
Phone: +44 1279 635533
Fax: +44 1279 635262
e-mail: sales@jumo.co.uk
Internet: www.jumo.co.uk

JUMO Process Control, Inc.
8 Technology Boulevard
Canastota, NY 13032, USA
Phone: 315-697-JUMO
1-800-554-JUMO
Fax: 315-697-5867
e-mail: info@jumo.us
Internet: www.jumo.us

Dimensions

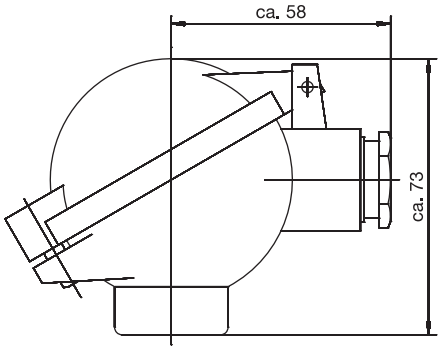

terminal head Form BUZ
extra code 320

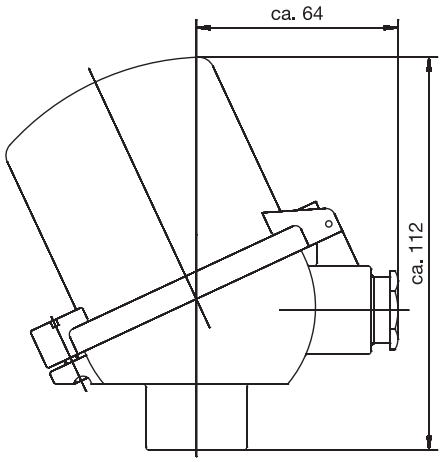

terminal head Form BUZH
extra code 321

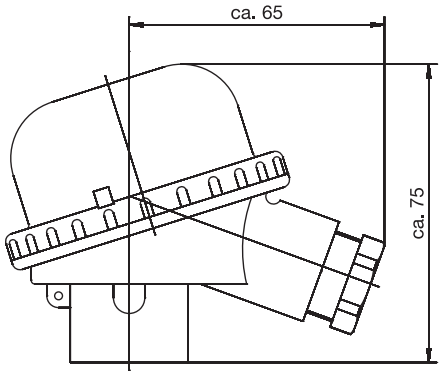

terminal head Form BBKS
extra code 324

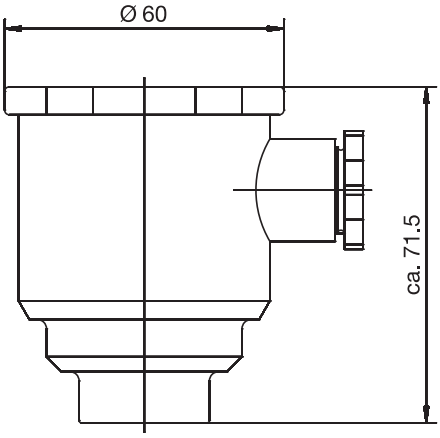

Terminal head Form BEGF
extra code 397

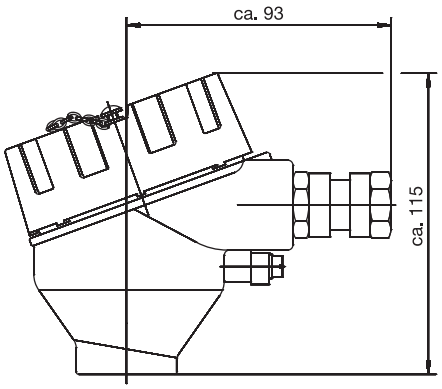

Terminal head Form XD-AD
extra code 399

JUMO GmbH & Co. KG
Delivery address: Mackenrodtstraße 14, 36039 Fulda, Germany
Postal address: 36035 Fulda, Germany
Phone: +49 661 6003-0
Fax: +49 661 6003-607
e-mail: mail@jumo.net
Internet: www.jumo.net

JUMO Instrument Co. Ltd.
JUMO House
Temple Bank, Riverway
Harlow, Essex CM20 2DY, UK
Phone: +44 1279 635533
Fax: +44 1279 635262
e-mail: sales@jumo.co.uk
Internet: www.jumo.co.uk

JUMO Process Control, Inc.
8 Technology Boulevard
Canastota, NY 13032, USA
Phone: 315-697-JUMO
1-800-554-JUMO
Fax: 315-697-5867
e-mail: info@jumo.us
Internet: www.jumo.us

Order specifications: RTD temperature probes for process technology

		(1)	**Basic type**
	902820/10		Screw-in RTD temperature probes with continuous sheath
		(2)	**Operating temperature in °C**
x	150		-200 to +600 °C (wire-wound temperature sensor)
x	402		-50 to +400 °C (thin-film temperature sensor)
x	415		-50 to +600 °C (thin-film temperature sensor)
		(3)	**Measuring insert**
x	1001		1x Pt100 in 3-wire-circuit
x	1003		1x Pt100 in 2-wire circuit
x	1011		1x Pt100 in 4-wire circuit
x	2001		2x Pt100 in 3-wire circuit
x	2003		2x Pt100 in 2-wire circuit
x	2011		2x Pt100 in 4-wire circuit (only with terminal head Form BUZH)
		(4)	**Tolerance class as per DIN EN 60751**
x	1		Class B (standard)
x	2		Class A
x	3		Class AA (1/3 DIN B)
		(5)	**Sheath diameter D in mm**
x	9		Ø 9 x 1 mm
x	11		Ø 11 x 2 mm
		(6)	**Fitting length EL in mm (100 to 1000)**
x	160		160 mm
x	250		250 mm
x	400		400 mm
x	...		Specification in plain text (50 mm steps)
		(7)	**Process connection**
x	104		Screw-connection G 1/2
x	106		Screw connection G 1
x	144		Screw connection (thread) 1/2-14NPT
x	146		Screw connection (thread) 1-11.5NPT
		(8)	**Sheathmaterial**
x	26		stainless steel 1.4571
x	60		titanium, on request
x	81		Inconel, on request
x	82		Hastelloy, on request
		(9)	**Extra codes**
x	000		None
x	320		terminal head Form BUZ
x	321		terminal head Form BUZH
x	324		terminal head Form BBKS
x	330		1x analog transmitter, 4 to 20 mA output[2], data sheet 707030 (not with extra code 362)
x	331		1x transmitter programmable output 4 to 20 mA/20 to 4 mA[3], data sheet 707010
x	333		1x analog transmitter, 0 to 10 V output[2], data sheet 707030 (not with extra code 362)
x	336		1x programmable transmitter, 4 to 20 mA output[3] and HART® interface, data sheet 707010
x	365		acceptance test certificate 3.1 DIN EN 10204 insulation resistance
x	367		acceptance test certificate 3.1 DIN EN 10204 pressure test
x	368		acceptance test certificate 3.1 DIN EN 10204 leakage test
x	374		acceptance test certificate 3.1 DIN EN 10204 material
x	562		parts in contact with medium with PTFE covering, on request
x	563		parts in contact with medium with HALAR coating, on request
x	859		1x Wtrans B programmable head transducer with radio transmission, data sheet 707060

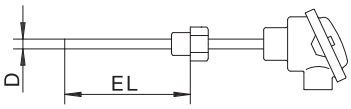

	(1)	-	(2)	-	(3)	-	(4)	-	(5)	-	(6)	-	(7)	-	(8)	/	(9)	,...[1]
Order code		-		-		-		-		-		-		-		/		,...[1]
Order example	902820/10	-	402	-	1001	-	1	-	9	-	250	-	104	-	26	/	000	

[1] List extra codes in sequence, separated by commas.
[2] Specify measuring range in plain text.
[3] Specify measuring range and output signal in plain text.

JUMO GmbH & Co. KG
Delivery address: Mackenrodtstraße 14, 36039 Fulda, Germany
Postal address: 36035 Fulda, Germany
Phone: +49 661 6003-0
Fax: +49 661 6003-607
e-mail: mail@jumo.net
Internet: www.jumo.net

JUMO Instrument Co. Ltd.
JUMO House
Temple Bank, Riverway
Harlow, Essex CM20 2DY, UK
Phone: +44 1279 635533
Fax: +44 1279 635262
e-mail: sales@jumo.co.uk
Internet: www.jumo.co.uk

JUMO Process Control, Inc.
8 Technology Boulevard
Canastota, NY 13032, USA
Phone: 315-697-JUMO
1-800-554-JUMO
Fax: 315-697-5867
e-mail: info@jumo.us
Internet: www.jumo.us

Order specifications: RTD temperature probes for process technology

		(1)	**Basic type**
	902820/11		Screw-in RTD temperature probes with stepped sheath

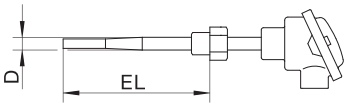

		(2)	**Operating temperature in °C**
x	150		-200 to +600 °C (wire-wound temperature sensor)
x	402		-50 to +400 °C (thin-film temperature sensor)
x	415		-50 to +600 °C (thin-film temperature sensor)
		(3)	**Measuring insert**
x	1001		1x Pt100 in 3-wire-circuit
x	1003		1x Pt100 in 2-wire circuit
x	1011		1x Pt100 in 4-wire circuit
x	2001		2x Pt100 in 3-wire circuit
x	2003		2x Pt100 in 2-wire circuit
x	2011		2x Pt100 in 4-wire circuit (only with terminal head Form BUZH)
		(4)	**Tolerance class as per DIN EN 60751**
x	1		Class B (standard)
x	2		Class A
x	3		Class AA (1/3 DIN B)
		(5)	**Sheath diameter D in mm**
x	12		Ø 12 x 2.5 mm stepped down to 9 mm
		(6)	**Fitting length EL in mm (100 to 700)**
x	160		160 mm
x	220		220 mm
x	250		250 mm
x	280		280 mm
x	400		400 mm
x	...		Specification in plain text (50 mm steps)
		(7)	**Process connection**
x	104		Screw-connection G 1/2
x	106		Screw connection G 1
x	144		Screw connection (thread) 1/2-14NPT
x	146		Screw connection (thread) 1-11.5NPT
		(8)	**Sheathmaterial**
x	26		stainless steel 1.4571
		(9)	**Extra codes**
x	000		None
x	320		terminal head Form BUZ
x	321		terminal head Form BUZH
x	324		terminal head Form BBKS
x	330		1x analog transmitter, 4 to 20 mA output[2], data sheet 707030 (not with extra code 362)
x	331		1x transmitter programmable output 4 to 20 mA/20 to 4 mA[3], data sheet 707010
x	333		1x analog transmitter, 0 to 10 V output[2], data sheet 707030 (not with extra code 362)
x	336		1x programmable transmitter, 4 to 20 mA output[3] and HART® interface, data sheet 707010
x	365		acceptance test certificate 3.1 DIN EN 10204 insulation resistance
x	367		acceptance test certificate 3.1 DIN EN 10204 pressure test
x	368		acceptance test certificate 3.1 DIN EN 10204 leakage test
x	374		acceptance test certificate 3.1 DIN EN 10204 material
x	562		parts in contact with medium with PTFE covering, on request
x	563		parts in contact with medium with HALAR coating, on request
x	859		1x Wtrans B programmable head transducer with radio transmission, data sheet 707060

	(1)		(2)		(3)		(4)		(5)		(6)		(7)		(8)		(9)	
Order code	[ ]	-	[ ]	-	[ ]	-	[ ]	-	[ ]	-	[ ]	-	[ ]	-	[ ]	/	[ ]	, ...[1]
Order example	902820/11	-	402	-	1001	-	1	-	12	-	250	-	104	-	26	/	000	

[1] List extra codes in sequence, separated by commas.
[2] Specify measuring range in plain text.
[3] Specify measuring range and output signal in plain text.

JUMO GmbH & Co. KG
Delivery address: Mackenrodtstraße 14, 36039 Fulda, Germany
Postal address: 36035 Fulda, Germany
Phone: +49 661 6003-0
Fax: +49 661 6003-607
e-mail: mail@jumo.net
Internet: www.jumo.net

JUMO Instrument Co. Ltd.
JUMO House
Temple Bank, Riverway
Harlow, Essex CM20 2DY, UK
Phone: +44 1279 635533
Fax: +44 1279 635262
e-mail: sales@jumo.co.uk
Internet: www.jumo.co.uk

JUMO Process Control, Inc.
8 Technology Boulevard
Canastota, NY 13032, USA
Phone: 315-697-JUMO
1-800-554-JUMO
Fax: 315-697-5867
e-mail: info@jumo.us
Internet: www.jumo.us

Order specifications: RTD temperature probes for process technology

		(1)	**Basic type**
	902820/20		Push-in RTD temperature probes with continuous sheath

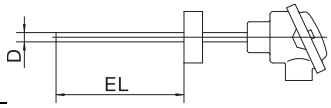

		(2)	**Operating temperature in °C**
x	150		-200 to +600 °C (wire-wound temperature sensor)
x	402		-50 to +400 °C (thin-film temperature sensor)
x	415		-50 to +600 °C (thin-film temperature sensor)
		(3)	**Measuring insert**
x	1001		1x Pt100 in 3-wire-circuit
x	1003		1x Pt100 in 2-wire circuit
x	1011		1x Pt100 in 4-wire circuit
x	2001		2x Pt100 in 3-wire circuit
x	2003		2x Pt100 in 2-wire circuit
x	2011		2x Pt100 in 4-wire circuit (only with terminal head Form BUZH)
		(4)	**Tolerance class as per DIN EN 60751**
x	1		Class B (standard)
x	2		Class A
x	3		Class AA (1/3 DIN B)
		(5)	**Sheath diameter D in mm**
x	9		Ø 9 x 1 mm
x	11		Ø 11 x 2 mm
		(6)	**Fitting length EL in mm (100 to 1000)**
x	160		160 mm
x	250		250 mm
x	400		400 mm
x	...		Specification in plain text (50 mm steps)
		(7)	**Process connection**
x	000		None
x	642		Flange C DN 25 PN 40, DIN 2501
x	644		Flange C DN 40 PN 40, DIN 2501
		(8)	**Sheathmaterial**
x	26		stainless steel 1.4571
x	60		titanium, on request
x	80		tantalum, on request
x	81		Inconel, on request
x	82		Hastelloy, on request
		(9)	**Extra codes**
x	000		None
x	320		terminal head Form BUZ
x	321		terminal head Form BUZH
x	324		terminal head Form BBKS
x	330		1x analog transmitter, 4 to 20 mA output[2], data sheet 707030 (not with extra code 362)
x	331		1x transmitter programmable output 4 to 20 mA/20 to 4 mA[3], data sheet 707010
x	333		1x analog transmitter, 0 to 10 V output[2], data sheet 707030 (not with extra code 362)
x	336		1x programmable transmitter, 4 to 20 mA output[3] and HART® interface, data sheet 707010
x	365		acceptance test certificate 3.1 DIN EN 10204 insulation resistance
x	367		acceptance test certificate 3.1 DIN EN 10204 pressure test
x	368		acceptance test certificate 3.1 DIN EN 10204 leakage test
x	374		acceptance test certificate 3.1 DIN EN 10204 material
x	562		parts in contact with medium with PTFE covering, on request
x	563		parts in contact with medium with HALAR coating, on request
x	859		1x Wtrans B programmable head transducer with radio transmission, data sheet 707060

	(1)		(2)		(3)		(4)		(5)		(6)		(7)		(8)		(9)	
Order code	[ ]	-	[ ]	-	[ ]	-	[ ]	-	[ ]	-	[ ]	-	[ ]	-	[ ]	/	[ ]	, ...[1]
Order example	902820/20	-	402	-	1001	-	1	-	9	-	250	-	642	-	26	/	000	

[1] List extra codes in sequence, separated by commas.
[2] Specify measuring range in plain text.
[3] Specify measuring range and output signal in plain text.

JUMO GmbH & Co. KG
Delivery address: Mackenrodtstraße 14, 36039 Fulda, Germany
Postal address: 36035 Fulda, Germany
Phone: +49 661 6003-0
Fax: +49 661 6003-607
e-mail: mail@jumo.net
Internet: www.jumo.net

JUMO Instrument Co. Ltd.
JUMO House
Temple Bank, Riverway
Harlow, Essex CM20 2DY, UK
Phone: +44 1279 635533
Fax: +44 1279 635262
e-mail: sales@jumo.co.uk
Internet: www.jumo.co.uk

JUMO Process Control, Inc.
8 Technology Boulevard
Canastota, NY 13032, USA
Phone: 315-697-JUMO
1-800-554-JUMO
Fax: 315-697-5867
e-mail: info@jumo.us
Internet: www.jumo.us

Order specifications: RTD temperature probes for process technology

		(1)	**Basic type**
	902820/21		Push-in RTD temperature probes with stepped sheath
		(2)	**Operating temperature in °C**
x	150		-200 to +600 °C (wire-wound temperature sensor)
x	402		-50 to +400 °C (thin-film temperature sensor)
x	415		-50 to +600 °C (thin-film temperature sensor)
		(3)	**Measuring insert**
x	1001		1x Pt100 in 3-wire-circuit
x	1003		1x Pt100 in 2-wire circuit
x	1011		1x Pt100 in 4-wire circuit
x	2001		2x Pt100 in 3-wire circuit
x	2003		2x Pt100 in 2-wire circuit
x	2011		2x Pt100 in 4-wire circuit (only with terminal head Form BUZH)
		(4)	**Tolerance class as per DIN EN 60751**
x	1		Class B (standard)
x	2		Class A
x	3		Class AA (1/3 DIN B)
		(5)	**Sheath diameter D in mm**
x	12		Ø 12 x 2.5 mm stepped down to 9 mm
		(6)	**Fitting length EL in mm (100 to 700)**
x	160		160 mm
x	225		225 mm
x	250		250 mm
x	285		285 mm
x	345		345 mm
x	400		400 mm
x	...		Specification in plain text (50 mm steps)
		(7)	**Process connection**
x	000		None
x	642		Flange C DN 25 PN 40, DIN 2501
x	644		Flange C DN 40 PN 40, DIN 2501
		(8)	**Sheathmaterial**
x	26		stainless steel 1.4571
		(9)	**Extra codes**
x	000		None
x	320		terminal head Form BUZ
x	321		terminal head Form BUZH
x	324		terminal head Form BBKS
x	330		1x analog transmitter, 4 to 20 mA output[2], data sheet 707030 (not with extra code 362)
x	331		1x transmitter programmable output 4 to 20 mA/20 to 4 mA[3], data sheet 707010
x	333		1x analog transmitter, 0 to 10 V output[2], data sheet 707030 (not with extra code 362)
x	336		1x programmable transmitter, 4 to 20mA output[3] and HART® interface, data sheet 707010
x	365		acceptance test certificate 3.1B DIN EN 10204 insulation resistance
x	367		acceptance test certificate 3.1B DIN EN 10204 pressure test
x	368		acceptance test certificate 3.1B DIN EN 10204 leakage test
x	374		acceptance test certificate 3.1B DIN EN 10204 material
x	562		parts in contact with medium with PTFE covering, on request
x	563		parts in contact with medium with HALAR coating, on request
x	859		1x Wtrans B programmable head transducer with radio transmission, data sheet 707060

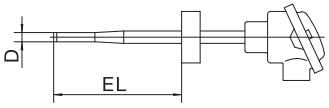

	(1)		(2)		(3)		(4)		(5)		(6)		(7)		(8)		(9)	
Order code	[ ]	-	[ ]	-	[ ]	-	[ ]	-	[ ]	-	[ ]	-	[ ]	-	[ ]	/	[ ]	, ...[1]
Order example	902820/21	-	402	-	1001	-	1	-	12	-	250	-	642	-	26	/	000	

[1] List extra codes in sequence, separated by commas.
[2] Specify measuring range in plain text.
[3] Specify measuring range and output signal in plain text.

JUMO GmbH & Co. KG
Delivery address: Mackenrodtstraße 14, 36039 Fulda, Germany
Postal address: 36035 Fulda, Germany
Phone: +49 661 6003-0
Fax: +49 661 6003-607
e-mail: mail@jumo.net
Internet: www.jumo.net

JUMO Instrument Co. Ltd.
JUMO House
Temple Bank, Riverway
Harlow, Essex CM20 2DY, UK
Phone: +44 1279 635533
Fax: +44 1279 635262
e-mail: sales@jumo.co.uk
Internet: www.jumo.co.uk

JUMO Process Control, Inc.
8 Technology Boulevard
Canastota, NY 13032, USA
Phone: 315-697-JUMO
1-800-554-JUMO
Fax: 315-697-5867
e-mail: info@jumo.us
Internet: www.jumo.us

Order specifications: RTD temperature probes for process technology

			(1)	**Basic type**
		902820/50		Screw-in RTD temperature probes with sheath DIN 43767 Form D1/D2
		902820/51		Screw-in RTD temperature probes with sheath DIN 43767 Form D4/D5
			(2)	**Operating temperature in °C (for restrictions, see DIN 43763)**
x	x	150		-200 to +600 °C (wire-wound temperature sensor)
x	x	402		-50 to +400 °C (thin-film temperature sensor)
x	x	415		-50 to +600 °C (thin-film temperature sensor)
			(3)	**Measuring insert**
x	x	1001		1x Pt100 in 3-wire-circuit
x	x	1003		1x Pt100 in 2-wire circuit
x	x	1011		1x Pt100 in 4-wire circuit
x	x	2001		2x Pt100 in 3-wire circuit
x	x	2003		2x Pt100 in 2-wire circuit
x	x	2011		2x Pt100 in 4-wire circuit (only with terminal head Form BUZH)
			(4)	**Tolerance class as per DIN EN 60751**
x	x	1		Class B (standard)
x	x	2		Class A
x	x	3		Class AA (1/3 DIN B)
			(5)	**Pocket diameter D in mm**
x	x	24		Ø 24 mm stepped down to 12.5 mm
			(6)	**Fitting length EL in mm**
x	x	65		65 mm for Form D1/D4
x	x	125		125 mm with form D2 / D5
			(7)	**Pocket material**
x	x	26		stainless steel 1.4571 (operating temperature +600 °C)
x	x	36		Steel 1.7335 (operating temperature +540 °C)
x	x	60		titanium, on request
x	x	80		tantalum, on request
x	x	81		Inconel, on request
x	x	82		Hastelloy, on request
			(8)	**Extra codes**
x	x	000		None
x	x	320		terminal head Form BUZ
x	x	321		terminal head Form BUZH
x	x	324		terminal head Form BBKS
x	x	330		1x analog transmitter, 4 to 20 mA output[2], data sheet 707030 (not with extra code 362)
x	x	331		1x transmitter programmable output 4 to 20 mA/20 to 4 mA[3], data sheet 707010
x	x	333		1x analog transmitter, 0 to 10 V output[2], data sheet 707030 (not with extra code 362)
x	x	336		1x programmable transmitter, 4 to 20 mA output[3] and HART® interface, data sheet 70.7010
x	x	365		acceptance test certificate 3.1 DIN EN 10204 insulation resistance
x	x	367		acceptance test certificate 3.1 DIN EN 10204 pressure test
x	x	368		acceptance test certificate 3.1 DIN EN 10204 leakage test
x	x	374		acceptance test certificate 3.1 DIN EN 10204 material
x	x	562		parts in contact with medium with PTFE covering, on request
x	x	563		parts in contact with medium with HALAR coating, on request
x	x	859		1x Wtrans B programmable head transducer with radio transmission, data sheet 707060

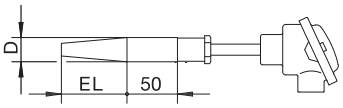

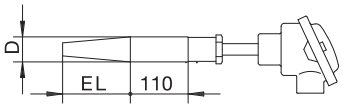

	(1)	-	(2)	-	(3)	-	(4)	-	(5)	-	(6)	-	(7)	/	(8)	,...[1]
Order code		-		-		-		-		-		-		/		,...[1]
Order example	902820/50	-	402	-	1001	-	1	-	24	-	125	-	26	/	000	

[1] List extra codes in sequence, separated by commas.
[2] Specify measuring range in plain text.
[3] Specify measuring range and output signal in plain text.

JUMO GmbH & Co. KG
Delivery address: Mackenrodtstraße 14, 36039 Fulda, Germany
Postal address: 36035 Fulda, Germany
Phone: +49 661 6003-0
Fax: +49 661 6003-607
e-mail: mail@jumo.net
Internet: www.jumo.net

JUMO Instrument Co. Ltd.
JUMO House
Temple Bank, Riverway
Harlow, Essex CM20 2DY, UK
Phone: +44 1279 635533
Fax: +44 1279 635262
e-mail: sales@jumo.co.uk
Internet: www.jumo.co.uk

JUMO Process Control, Inc.
8 Technology Boulevard
Canastota, NY 13032, USA
Phone: 315-697-JUMO
1-800-554-JUMO
Fax: 315-697-5867
e-mail: info@jumo.us
Internet: www.jumo.us

Order specifications: RTD temperature probes for process technology with Ex (ATEX) approval

Ex II 1/2 G Ex ia IIC T1 to T6 (or Ex ib IIC T1 to T6)[4] Ex II 1/2 D Ex iaD 20/21 T80 °C to T400 °C (or ...ib...)[4]
Ex II 1/2 G Ex d IIC T1 to T6[4] Ex II 1/2 D Ex tb A20/21 IP66 T80 °C to T400 °C[4]

		(1)	**Basic type**
	902820/10		Screw-in RTD temperature probes with continuous sheath
		(2)	**Operating temperature in °C**
x	150		-200 to +600 °C (wire-wound temperature sensor)
x	415		-50 to +600 °C (thin-film temperature sensor)
		(3)	**Measuring insert**
x	1001		1x Pt100 in 3-wire circuit (not in conjunction with transmitter 331, 336)
x	1003		1x Pt100 in 2-wire circuit (not in conjunction with transmitter 331, 336)
x	1011		1x Pt100 in 4-wire circuit
x	2001		2x Pt100 in 3-wire circuit
x	2003		2x Pt100 in 2-wire circuit (not in conjunction with transmitter 331, 336)
		(4)	**Tolerance class as per DIN EN 60751**
x	1		Class B (standard)
x	2		Class A
x	3		Class AA (1/3 DIN B)
		(5)	**Sheath diameter D in mm**
x	9		Ø 9 x 1 mm (for use in zone 0 or 20 on request)
x	11		Ø 11 x 2 mm
		(6)	**Fitting length EL in mm (100 to 1000)**
x	160		160 mm
x	250		250 mm
x	400		400 mm
x	...		Specification in plain text (50 mm steps)
		(7)	**Process connection**
x	104		Screw-connection G 1/2
x	106		Screw connection G 1
x	144		Screw connection (thread) 1/2-14NPT
x	146		Screw connection (thread) 1-11.5NPT
		(8)	**Sheathmaterial**
x	26		stainless steel 1.4571
x	60		titanium, on request
x	81		Inconel, on request
x	82		Hastelloy, on request
		(9)	**Extra codes**
			Caution: for application in zones 20, 21 and 22, only a terminal head with a min. protection rating of IP65 is possible.
x	320		terminal head Form BUZ
x	321		terminal head Form BUZH
x	397		Terminal head Form BEGF
x	331		Ex 1x transmitter programmable output 4 to 20 mA/20 to 4 mA[3], data sheet 707010
x	336		Ex 1x programmable transmitter, 4 to 20 mA output[3] and HART® interface, data sheet 707010
x	**362**		**Ex Ex protection i per EC directive 94/9/EC (ATEX)[4]**
x	399		Ex Ex protection d flameproof enclosure, terminal head Form XD-AD (ATEX) Cable gland for cable dia. 3.0 to 8.0 mm (for cable dia. 7.5 to 11.9 mm on request) only possible in conjunction with 362.
x	365		acceptance test certificate 3.1 DIN EN 10204 insulation resistance
x	367		acceptance test certificate 3.1 DIN EN 10204 pressure test
x	368		acceptance test certificate 3.1 DIN EN 10204 leakage test
x	374		acceptance test certificate 3.1 DIN EN 10204 material
x	562		parts in contact with medium with PTFE covering, on request
x	563		parts in contact with medium with HALAR coating, on request

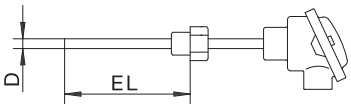

Additional details: In which zone is the RTD temperature probe used?

	(1)	-	(2)	-	(3)	-	(4)	-	(5)	-	(6)	-	(7)	-	(8)	/	(9)	
Order code		-		-		-		-		-		-		-		/	**362**	,...[1]
Order example	902820/10	-	415	-	1001	-	1	-	9	-	250	-	104	-	26	/	362	

Note: Due to the complexity of the possible versions, not all variations can be illustrated.
We must draw your attention to the fact that certain combinations cannot be supplied for all ATEX categories.

[1] List extra codes in sequence, separated by commas.
[3] Specify measuring range and output signal in plain text.
[4] The precise Ex protection identification is listed on the rating plate and in Operating Manual B 90.2820.0.

JUMO GmbH & Co. KG
Delivery address: Mackenrodtstraße 14, 36039 Fulda, Germany
Postal address: 36035 Fulda, Germany
Phone: +49 661 6003-0
Fax: +49 661 6003-607
e-mail: mail@jumo.net
Internet: www.jumo.net

JUMO Instrument Co. Ltd.
JUMO House
Temple Bank, Riverway
Harlow, Essex CM20 2DY, UK
Phone: +44 1279 635533
Fax: +44 1279 635262
e-mail: sales@jumo.co.uk
Internet: www.jumo.co.uk

JUMO Process Control, Inc.
8 Technology Boulevard
Canastota, NY 13032, USA
Phone: 315-697-JUMO
1-800-554-JUMO
Fax: 315-697-5867
e-mail: info@jumo.us
Internet: www.jumo.us

Order specifications: RTD temperature probes for process technology with Ex (ATEX) approval

Ex II 1/2 G Ex ia IIC T1 to T6 (or Ex ib IIC T1 to T6)[4] Ex II 1/2 D Ex iaD 20/21 T80°C to T400 °C (or ...ib...)[4]
Ex II 1/2 G Ex d IIC T1 to T6[4] Ex II 1/2 D Ex tb A20/21 IP66 T80 °C to T400 °C[4]

		(1)	**Basic type**
	902820/11		Screw-in RTD temperature probes with stepped sheath
		(2)	**Operating temperature in °C**
x	150		-200 to +600 °C (wire-wound temperature sensor)
x	415		-50 to +600 °C (thin-film temperature sensor)
		(3)	**Measuring insert**
x	1001		1x Pt100 in 3-wire circuit (not in conjunction with transmitter 331, 336)
x	1003		1x Pt100 in 2-wire circuit (not in conjunction with transmitter 331, 336)
x	1011		1x Pt100 in 4-wire circuit
x	2001		2x Pt100 in 3-wire circuit
x	2003		2x Pt100 in 2-wire circuit (not in conjunction with transmitter 331, 336)
		(4)	**Tolerance class as per DIN EN 60751**
x	1		Class B (standard)
x	2		Class A
x	3		Class AA (1/3 DIN B)
		(5)	**Sheath diameter D in mm**
x	12		Ø 12x2.5 mm, stepped down to 9 mm (for use in zone 0 or 20, on request)
		(6)	**Fitting length EL in mm (100 to 700)**
x	160		160 mm
x	220		220 mm
x	250		250 mm
x	280		280 mm
x	400		400 mm
x	...		Specification in plain text (50 mm steps)
		(7)	**Process connection**
x	104		Screw-connection G 1/2
x	106		Screw connection G 1
x	144		Screw connection (thread) 1/2-14NPT
x	146		Screw connection (thread) 1-11.5NPT
		(8)	**Sheathmaterial**
x	26		stainless steel 1.4571
		(9)	**Extra codes**
			Caution: for application in zones 20, 21 and 22, only a terminal head with a min. protection rating of IP65 is possible.
x	320		terminal head Form BUZ
x	321		terminal head Form BUZH
x	397		Terminal head Form BEGF
x	331		Ex 1x programmable transmitter, output 4 to 20 mA/20 to 4mA[3], data sheet 707010
x	336		Ex 1x programmable transmitter, 4 to 20 mA output[3] and HART® interface, data sheet 707010
x	**362**		**Ex Ex protection i per EC directive 94/9/EC (ATEX)[4]**
x	399		Ex Ex protection d flameproof enclosure, terminal head Form XD-AD (ATEX) Cable gland for cable dia. 3.0 to 8.0 mm (for cable dia. 7.5 to 11.9 mm on request) only possible in conjunction with 362.
x	365		acceptance test certificate 3.1 DIN EN 10204 insulation resistance
x	367		acceptance test certificate 3.1 DIN EN 10204 pressure test
x	368		acceptance test certificate 3.1 DIN EN 10204 leakage test
x	374		acceptance test certificate 3.1 DIN EN 10204 material
x	562		parts in contact with medium with PTFE covering, on request
x	563		parts in contact with medium with HALAR coating, on request

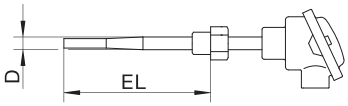

Additional details: In which zone is the RTD temperature probe used?

	(1)	-	(2)	-	(3)	-	(4)	-	(5)	-	(6)	-	(7)	-	(8)	/	(9)	
Order code		-		-		-		-		-		-		-		/	**362**	,...[1]
Order example	902820/11	-	415	-	1001	-	1	-	12	-	250	-	104	-	26	/	362	

Note: Due to the complexity of the possible versions, not all variations can be illustrated.
We must draw your attention to the fact that certain combinations cannot be supplied for all ATEX categories.

[1] List extra codes in sequence, separated by commas.
[3] Specify measuring range and output signal in plain text.
[4] The precise Ex protection identification is listed on the rating plate and in Operating Manual B 90.2820.0.

JUMO GmbH & Co. KG
Delivery address: Mackenrodtstraße 14, 36039 Fulda, Germany
Postal address: 36035 Fulda, Germany
Phone: +49 661 6003-0
Fax: +49 661 6003-607
e-mail: mail@jumo.net
Internet: www.jumo.net

JUMO Instrument Co. Ltd.
JUMO House
Temple Bank, Riverway
Harlow, Essex CM20 2DY, UK
Phone: +44 1279 635533
Fax: +44 1279 635262
e-mail: sales@jumo.co.uk
Internet: www.jumo.co.uk

JUMO Process Control, Inc.
8 Technology Boulevard
Canastota, NY 13032, USA
Phone: 315-697-JUMO
1-800-554-JUMO
Fax: 315-697-5867
e-mail: info@jumo.us
Internet: www.jumo.us

Order specifications: RTD temperature probes for process technology with Ex (ATEX) approval

Ex II 1/2 G Ex ia IIC T1 to T6 (or Ex ib IIC T1 to T6)[4] Ex II 1/2 D Ex iaD 20/21 T80 °C to T400 °C (or ...ib...)[4]
Ex II 1/2 G Ex d IIC T1 to T6[4] Ex II 1/2 D Ex tb A20/21 IP66 T80 °C to T400 °C[4]

		(1)	**Basic type**
	902820/20		Push-in RTD temperature probes with continuous sheath
		(2)	**Operating temperature in °C**
x	150		-200 to +600 °C (wire-wound temperature sensor)
x	415		-50 to +600 °C (thin-film temperature sensor)
		(3)	**Measuring insert**
x	1001		1x Pt100 in 3-wire circuit (not in conjunction with transmitter 331, 336)
x	1003		1x Pt100 in 2-wire circuit (not in conjunction with transmitter 331, 336)
x	1011		1x Pt100 in 4-wire circuit
x	2001		2x Pt100 in 3-wire circuit
x	2003		2x Pt100 in 2-wire circuit (not in conjunction with transmitter 331, 336)
		(4)	**Tolerance class as per DIN EN 60751**
x	1		Class B (standard)
x	2		Class A
x	3		Class AA (1/3 DIN B)
		(5)	**Sheath diameter D in mm**
x	9		Ø 9 x 1 mm (for use in zone 0 or 20 on request)
x	11		Ø 11 x 2 mm
		(6)	**Fitting length EL in mm (100 to 1000)**
x	160		160 mm
x	250		250 mm
x	400		400 mm
x	...		Specification in plain text (50 mm steps)
		(7)	**Process connection**
x	000		None
x	642		Flange C DN 25 PN 40, DIN 2501
x	644		Flange C DN 40 PN 40, DIN 2501
		(8)	**Sheathmaterial**
x	26		stainless steel 1.4571
x	60		titanium, on request
x	80		tantalum, on request
x	81		Inconel, on request
x	82		Hastelloy, on request
		(9)	**Extra codes**
			Caution: for application in zones 20, 21 and 22, only a terminal head with a min. protection rating of IP65 is possible.
x	320		terminal head Form BUZ
x	321		terminal head Form BUZH
x	397		Terminal head Form BEGF
x	331		Ex 1x transmitter programmable output 4 to 20 mA/20 to 4 mA[3], data sheet 707010
x	336		Ex 1x programmable transmitter, 4 to 20 mA output[3] and HART® interface, data sheet 707010
x	**362**		**Ex Ex protection i per EC directive 94/9/EC (ATEX)[4]**
x	399		Ex Ex protection d flameproof enclosure, terminal head Form XD-AD (ATEX) Cable gland for cable dia. 3.0 to 8.0 mm (for cable dia. 7.5 to 11.9 mm on request) only possible in conjunction with 362.
x	365		acceptance test certificate 3.1 DIN EN 10204 insulation resistance
x	367		acceptance test certificate 3.1 DIN EN 10204 pressure test
x	368		acceptance test certificate 3.1 DIN EN 10204 leakage test
x	374		acceptance test certificate 3.1 DIN EN 10204 material
x	562		parts in contact with medium with PTFE covering, on request
x	563		parts in contact with medium with HALAR coating, on request

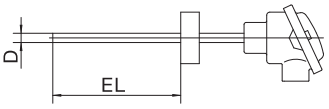

Additional details: In which zone is the RTD temperature probe used?

	(1)	-	(2)	-	(3)	-	(4)	-	(5)	-	(6)	-	(7)	-	(8)	/	(9)	
Order code		-		-		-		-		-		-		-		/	**362**	,...[1]
Order example	902820/20	-	415	-	1001	-	1	-	9	-	250	-	642	-	26	/	362	

Note: Due to the complexity of the possible versions, not all variations can be illustrated.
We must draw your attention to the fact that certain combinations cannot be supplied for all ATEX categories.

[1] List extra codes in sequence, separated by commas.
[3] Specify measuring range and output signal in plain text.
[4] The precise Ex protection identification is listed on the rating plate and in Operating Manual B 90.2820.0.

JUMO GmbH & Co. KG
Delivery address: Mackenrodtstraße 14, 36039 Fulda, Germany
Postal address: 36035 Fulda, Germany
Phone: +49 661 6003-0
Fax: +49 661 6003-607
e-mail: mail@jumo.net
Internet: www.jumo.net

JUMO Instrument Co. Ltd.
JUMO House
Temple Bank, Riverway
Harlow, Essex CM20 2DY, UK
Phone: +44 1279 635533
Fax: +44 1279 635262
e-mail: sales@jumo.co.uk
Internet: www.jumo.co.uk

JUMO Process Control, Inc.
8 Technology Boulevard
Canastota, NY 13032, USA
Phone: 315-697-JUMO
1-800-554-JUMO
Fax: 315-697-5867
e-mail: info@jumo.us
Internet: www.jumo.us

Order specifications: RTD temperature probes for process technology with Ex (ATEX) approval

Ex II 1/2 G Ex ia IIC T1 to T6 (or Ex ib IIC T1 to T6)[4] Ex II 1/2 D Ex iaD 20/21 T80 °C to T400 °C (or ...ib...)[4]
Ex II 1/2 G Ex d IIC T1 to T6[4] Ex II 1/2 D Ex tb A20/21 IP66 T80 °C to T400 °C[4]

		(1)	**Basic type**
	902820/21		Push-in RTD temperature probes with stepped sheath

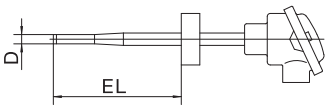

		(2)	**Operating temperature in °C**
x	150		-200 to +600 °C (wire-wound temperature sensor)
x	415		-50 to +600 °C (thin-film temperature sensor)
		(3)	**Measuring insert**
x	1001		1x Pt100 in 3-wire circuit (not in conjunction with transmitter 331, 336)
x	1003		1x Pt100 in 2-wire circuit (not in conjunction with transmitter 331, 336)
x	1011		1x Pt100 in 4-wire circuit
x	2001		2x Pt100 in 3-wire circuit
x	2003		2x Pt100 in 2-wire circuit (not in conjunction with transmitter 331, 336)
		(4)	**Tolerance class as per DIN EN 60751**
x	1		Class B (standard)
x	2		Class A
x	3		Class AA (1/3 DIN B)
		(5)	**Sheath diameter D in mm**
x	12		Ø 12x2.5 mm, stepped down to 9 mm (for use in zone 0 or 20, on request)
		(6)	**Fitting length EL in mm (100 to 700)**
x	160		160 mm
x	225		225 mm
x	250		250 mm
x	285		285 mm
x	345		345 mm
x	400		400 mm
x	...		Specification in plain text (50 mm steps)
		(7)	**Process connection**
x	000		None
x	642		Flange C DN 25 PN 40, DIN 2501
x	644		Flange C DN 40 PN 40, DIN 2501
		(8)	**Sheathmaterial**
x	26		stainless steel 1.4571
		(9)	**Extra codes**
			Caution: for application in zones 20, 21 and 22, only a terminal head with a min. protection rating of IP65 is possible.
x	320		terminal head Form BUZ
x	321		terminal head Form BUZH
x	397		Terminal head Form BEGF
x	331		Ex 1x transmitter programmable output 4 to 20 mA/20 to 4 mA[3], data sheet 707010
x	336		Ex 1x programmable transmitter, 4 to 20 mA output[3] and HART® interface, data sheet 707010
x	**362**		**Ex Ex protection i per EC directive 94/9/EC (ATEX)[4]**
x	399		Ex Ex protection d flameproof enclosure, terminal head Form XD-AD (ATEX) Cable gland for cable dia. 3.0 to 8.0 mm (for cable dia. 7.5 to 11.9 mm on request) only possible in conjunction with 362.
x	365		acceptance test certificate 3.1 DIN EN 10204 insulation resistance
x	367		acceptance test certificate 3.1 DIN EN 10204 pressure test
x	368		acceptance test certificate 3.1 DIN EN 10204 leakage test
x	374		acceptance test certificate 3.1 DIN EN 10204 material
x	562		parts in contact with medium with PTFE covering, on request
x	563		parts in contact with medium with HALAR coating, on request

Additional details: In which zone is the RTD temperature probe used?

	(1)		(2)		(3)		(4)		(5)		(6)		(7)		(8)		(9)	
Order code	[ ]	-	[ ]	-	[ ]	-	[ ]	-	[ ]	-	[ ]	-	[ ]	-	[ ]	/	**362**	,...[1]
Order example	902820/21	-	415	-	1001	-	1	-	12	-	250	-	642	-	26	/	362	

Note: Due to the complexity of the possible versions, not all variations can be illustrated.
We must draw your attention to the fact that certain combinations cannot be supplied for all ATEX categories.

[1] List extra codes in sequence, separated by commas.
[3] Specify measuring range and output signal in plain text.
[4] The precise Ex protection identification is listed on the rating plate and in Operating Manual B 90.2820.0.

JUMO GmbH & Co. KG
Delivery address: Mackenrodtstraße 14, 36039 Fulda, Germany
Postal address: 36035 Fulda, Germany
Phone: +49 661 6003-0
Fax: +49 661 6003-607
e-mail: mail@jumo.net
Internet: www.jumo.net

JUMO Instrument Co. Ltd.
JUMO House
Temple Bank, Riverway
Harlow, Essex CM20 2DY, UK
Phone: +44 1279 635533
Fax: +44 1279 635262
e-mail: sales@jumo.co.uk
Internet: www.jumo.co.uk

JUMO Process Control, Inc.
8 Technology Boulevard
Canastota, NY 13032, USA
Phone: 315-697-JUMO
1-800-554-JUMO
Fax: 315-697-5867
e-mail: info@jumo.us
Internet: www.jumo.us

Order specifications: RTD temperature probes for process technology with Ex (ATEX) approval

Ex II 1/2 G Ex ia IIC T1 to T6 (or Ex ib IIC T1 to T6)[4] Ex II 1/2 D Ex iaD 20/21 T80 °C to T400 °C (or ...ib...)[4]
Ex II 1/2 G Ex d IIC T1 to T6[4] Ex II 1/2 D Ex tb A20/21 IP66 T80 °C to T400 °C[4]

			(1)	**Basic type**
		902820/50		Screw-in RTD temperature probes with sheath DIN 43767 Form D1/D2
		902820/51		Screw-in RTD temperature probes with sheath DIN 43767 Form D4/D5
			(2)	**Operating temperature in °C (for restrictions, see DIN 43763)**
x	x	150		-200 to +600 °C (wire-wound temperature sensor)
x	x	415		-50 to +600 °C (thin-film temperature sensor)
			(3)	**Measuring insert**
x	x	1001		1x Pt100 in 3-wire circuit (not in conjunction with transmitter 331, 336)
x	x	1003		1x Pt100 in 2-wire circuit (not in conjunction with transmitter 331, 336)
x	x	1011		1x Pt100 in 4-wire circuit
x	x	2001		2x Pt100 in 3-wire circuit
x	x	2003		2x Pt100 in 2-wire circuit (not in conjunction with transmitter 331, 336)
			(4)	**Tolerance class as per DIN EN 60751**
x	x	1		Class B (standard)
x	x	2		Class A
x	x	3		Class AA (1/3 DIN B)
			(5)	**Pocket diameter D in mm**
x	x	24		Ø 24 mm stepped down to 12.5 mm
			(6)	**Fitting length EL in mm**
x	x	65		65 mm for Form D1/D4
x	x	125		125 mm with form D2 / D5
			(7)	**Pocket material**
x	x	26		stainless steel 1.4571 (operating temperature +600 °C)
x	x	36		Steel 1.7335 (operating temperature +540 °C)
x	x	60		titanium, on request
x	x	80		tantalum, on request
x	x	81		Inconel, on request
x	x	82		Hastelloy, on request
			(8)	**Extra codes**
				Caution: for application in zones 20, 21 and 22, only a terminal head with a min. protection rating of IP65 is possible.
x	x	320		terminal head Form BUZ
x	x	321		terminal head Form BUZH
x	x	397		Terminal head Form BEGF
x	x	331		Ex 1x transmitter programmable output 4 to 20 mA/20 to 4 mA[3], data sheet 707010
x	x	336		Ex 1x programmable transmitter, 4 to 20 mA output[3] and HART® interface, data sheet 707010
x	**x**	**362**		**Ex Ex protection i per EC directive 94/9/EC (ATEX)[4]**
x	x	399		Ex Ex protection d flameproof enclosure, terminal head Form XD-AD (ATEX) Cable gland for cable dia. 3.0 to 8.0 mm (for cable dia. 7.5 to 11.9 mm on request) only possible in conjunction with 362.
x	x	365		acceptance test certificate 3.1 DIN EN 10204 insulation resistance
x	x	367		acceptance test certificate 3.1 DIN EN 10204 pressure test
x	x	368		acceptance test certificate 3.1 DIN EN 10204 leakage test
x	x	374		acceptance test certificate 3.1 DIN EN 10204 material
x	x	562		parts in contact with medium with PTFE covering, on request
x	x	563		parts in contact with medium with HALAR coating, on request
				Additional details: In which zone is the RTD temperature probe used?

	(1)		(2)		(3)		(4)		(5)		(6)		(7)		(8)	
Order code		-		-		-		-		-		-		/	**362**	,...[1]
Order example	902820/50	-	415	-	1001	-	1	-	24	-	125	-	26	/	362	

Note: Due to the complexity of the possible versions, not all variations can be illustrated.
We must draw your attention to the fact that certain combinations cannot be supplied for all ATEX categories.

[1] List extra codes in sequence, separated by commas.
[3] Specify measuring range and output signal in plain text.
[4] The precise Ex protection identification is listed on the rating plate and in Operating Manual B 90.2820.0.

JUMO GmbH & Co. KG
Delivery address: Mackenrodtstraße 14, 36039 Fulda, Germany
Postal address: 36035 Fulda, Germany
Phone: +49 661 6003-0
Fax: +49 661 6003-607
e-mail: mail@jumo.net
Internet: www.jumo.net

JUMO Instrument Co. Ltd.
JUMO House
Temple Bank, Riverway
Harlow, Essex CM20 2DY, UK
Phone: +44 1279 635533
Fax: +44 1279 635262
e-mail: sales@jumo.co.uk
Internet: www.jumo.co.uk

JUMO Process Control, Inc.
8 Technology Boulevard
Canastota, NY 13032, USA
Phone: 315-697-JUMO
1-800-554-JUMO
Fax: 315-697-5867
e-mail: info@jumo.us
Internet: www.jumo.us

Accessories for programmable 2-wire transmitter type 707010 in the accessories data sheet 709770

Part	Sales No.:
PC interface with TTL/RS232 converter and adapter (socket connector)	70/00350260
PC interface with USB/TTL converter, adapter (socket connector) and adapter (pins)	70/00456352
Special programming (standard measuring range 0 to 100 °C)	-
Setup program on CD-ROM, multilingual	70/00378733

Accessories for Wtrans B, programmable head transmitter with radio transmission Type 707060

Part	Sales No.:
Lithium battery 3.6 V, 2.2 Ah (size AA)	70/00547559
PC interface with USB/TTL converter, adapter (socket) and adapter (pins)	70/00456352
PC interface with TTL/RS232 converter and adapter (socket connector)	70/00350260
Setup program on CD-ROM, multilingual	70/00488887
Setup program including OnlineChart on CD-ROM, multilingual	70/00549067
OnlineChart activation	70/00549188

JUMO GmbH & Co. KG
Delivery address: Mackenrodtstraße 14
36039 Fulda, Germany
Postal address: 36035 Fulda, Germany
Phone: +49 661 6003-0
Fax: +49 661 6003-607
Email: mail@jumo.net
Internet: www.jumo.net

JUMO Instrument Co. Ltd.
JUMO House
Temple Bank, Riverway
Harlow, Essex, CM20 2DY, UK
Phone: +44 1279 63 55 33
Fax: +44 1279 62 50 29
Email: sales@jumo.co.uk
Internet: www.jumo.co.uk

JUMO Process Control, Inc.
6733 Myers Road
East Syracuse, NY 13057, USA
Phone: +1 315 437 5866
Fax: +1 315 437 5860
Email: info.us@jumo.net
Internet: www.jumousa.com

ATEX/IECEx/EACEx RTD temperature probe

With connecting cable, according to Directive 2014/34/EU

- For temperatures from -100 to +600 °C
- As single, double or triple RTD temperature probe in 2-wire, 3-wire, or 4-wire circuit
- Various connecting cables (including silicone, PTFE, metal braiding/glass fiber, PVC, PUR, FEP, RADOX®, BETAflam®, FPM), also available in shielded versions
- Application-specific design types

Basic type 902821/80 – Ex „i“ and 902821/90 – Ex „e“

Basic type 902821/81 – Ex „i“ and 902821/91 – Ex „e“

Basic type 902821/82 – Ex „i“ and 902821/92 – Ex „e“

Brief description

Due to their specific features, ATEX/IECEx/EACEx RTD temperature probes with connecting cables are used in pharmaceutical and chemical plants, power plants, pipes, on test rigs, in engine manufacturing, and at any measuring locations requiring flexibility and simple replacement.

The good thermal transfer between the protection tube and temperature sensor enables short response times and excellent measuring accuracy. The special construction guarantees a long operating life.

A Pt100 temperature sensor according to DIN EN 60751:2009 / IEC 60751:2008, class AA, A or B in a two-wire, three-wire, or four-wire circuit is used as a measuring insert as standard – versions with Pt500, Pt1000, Ni1000, or NTC are also possible.

Approvals and approval marks

JUMO GmbH & Co. KG
Delivery address: Mackenrodtstraße 14
36039 Fulda, Germany
Postal address: 36035 Fulda, Germany
Phone: +49 661 6003-0
Fax: +49 661 6003-607
Email: mail@jumo.net
Internet: www.jumo.net

JUMO Instrument Co. Ltd.
JUMO House
Temple Bank, Riverway
Harlow, Essex, CM20 2DY, UK
Phone: +44 1279 63 55 33
Fax: +44 1279 62 50 29
Email: sales@jumo.co.uk
Internet: www.jumo.co.uk

JUMO Process Control, Inc.
6733 Myers Road
East Syracuse, NY 13057, USA
Phone: +1 315 437 5866
Fax: +1 315 437 5860
Email: info.us@jumo.net
Internet: www.jumousa.com

Technical data

Connection	Connecting cable ends stripped bare or stripped in part, available with ferrules (standard), with plug-in sleeves, or multi-pole plug connection
Connecting cable	Silicone — Ambient temperature -50 to +180 °C PTFE — Ambient temperature -190 to +260 °C Metal braiding/ glass fiber — Ambient temperature -50 to +350 °C PUR — Ambient temperature -30 to +105 °C PVC — Ambient temperature -5 to +80 °C or -5 to +105 °C FEP — Ambient temperature -5 to +105 °C RADOX® — Ambient temperature -40 to +120 °C BETAflam® — Ambient temperature -40 to +120 °C FPM — Ambient temperature -50 to +180 °C
Protection tube	Stainless steel AISI 316: Ø ≥ 3 mm, mineral-insulated RTD temperature probe: stainless steel 1.4541, Ø 3 mm, Ø 6 mm
Protection tube constant	As the diameter of the temperature probe varies, the protection tube constant varies as follows: ≥ 3.0 mm = 220 K/W ≥ 3.3 mm = 180 K/W ≥ 4.0 mm = 110 K/W ≥ 5.0 mm = 80 K/W The protection tube constant describes how the temperature rises on the surface of the probe as work is performed and must be taken into account when dimensioning the intrinsically safe electrical circuit and selecting the temperature class.
Process connection	Thread, clamping socket (clamp) or JUMO PEKA hygienic process connection
Measuring insert	Standard: Pt100 temperature sensor, DIN EN 60751:2009 / IEC 60751:2008, class AA, A or B in two-wire, three-wire, or four-wire circuit NTC upon request

JUMO GmbH & Co. KG
Delivery address: Mackenrodtstraße 14
36039 Fulda, Germany
Postal address: 36035 Fulda, Germany
Phone: +49 661 6003-0
Fax: +49 661 6003-607
Email: mail@jumo.net
Internet: www.jumo.net

JUMO Instrument Co. Ltd.
JUMO House
Temple Bank, Riverway
Harlow, Essex, CM20 2DY, UK
Phone: +44 1279 63 55 33
Fax: +44 1279 62 50 29
Email: sales@jumo.co.uk
Internet: www.jumo.co.uk

JUMO Process Control, Inc.
6733 Myers Road
East Syracuse, NY 13057, USA
Phone: +1 315 437 5866
Fax: +1 315 437 5860
Email: info.us@jumo.net
Internet: www.jumousa.com

Approvals and approval marks

Approval mark	Test facility	Certificates/ Certification numbers	Inspection basis
II 1/2 G Ex ia IIC T1 ... T6 Ga/Gb II 1/2 G Ex ib IIC T1 ... T6 Ga/Gb II 1/2 D Ex ia IIIC T60°C ... T80°C Da/Db IP6X II 1/2 D Ex ib IIIC T60°C ... T80°C Da/Db IP6X	Eurofins Electrosuisse Product Testing AG	SEV 13 ATEX 0197	EN 60079-0:2012 + A11:2013 EN 60079-11:2012 EN 60079-26:2015
II 2 G Ex ia IIC T1 ... T6 Gb II 2 G Ex ib IIC T1 ... T6 Gb II 2 D Ex ia IIIC T60°C ... T80°C Db IP6X II 2 D Ex ib IIIC T60°C ... T80°C Db IP6X	Eurofins Electrosuisse Product Testing AG	SEV 13 ATEX 0197	EN 60079-0:2012 + A11:2013 EN 60079-11:2012 EN 60079-26:2015
II 1/2 G Ex ia IIC T1 ... T6 Ga/Gb II 1/2 G Ex ib IIC T1 ... T6 Ga/Gb II 1/2 D Ex ia IIIC T60°C ... T80°C Da/Db IP6X II 1/2 D Ex ib IIIC T60°C ... T80°C Da/Db IP6X	Eurofins Electrosuisse Product Testing AG	IECEx SEV 13.0010	IEC 60079-0:2011 IEC 60079-11:2011 IEC 60079-26:2006
II 2 G Ex ia IIC T1 ... T6 Gb II 2 G Ex ib IIC T1 ... T6 Gb II 2 D Ex ia IIIC T60°C ... T80°C Db IP6X II 2 D Ex ib IIIC T60°C ... T80°C Db IP6X	Eurofins Electrosuisse Product Testing AG	IECEx SEV 13.0010	IEC 60079-0:2011 IEC 60079-11:2011 IEC 60079-26:2006
II 2 G Ex eb IIC T6 ... T1 Gb II 2 D Ex tb IIIC T80°C Db II 1/2 D Ex ta/tb IIIC T80°C Da/Db	Eurofins Electrosuisse Product Testing AG	SEV 18 ATEX 0209 X	EN 60079-0:2018 EN 60079-7:2015 EN 60079-31:2014 EN 61326-1:2013
II 1/2 G Ex ia IIC T1 ... T6 Ga/Gb II 1/2 G Ex ib IIC T1 ... T6 Ga/Gb II 1/2 D Ex ia IIIC T60°C ... T80°C Da/Db IP6X II 1/2 D Ex ib IIIC T60°C ... T80°C Da/Db IP6X II 2 G Ex ia IIC T1 ... T6 Gb II 2 G Ex ib IIC T1 ... T6 Gb II 2 D Ex ia IIIC T60°C ... T80°C Db IP6X II 2 D Ex ib IIIC T60°C ... T80°C Db IP6X II 1/2 G Ex e IIC T1 ... T6 Ga/Gb II 1/2 D Ex tb IIIC T60°C ... T80°C IP65 Da/Db II 2 G Ex e IIC T1 ... T6 Gb II 2 D Ex tb IIIC T60°C ... T80°C IP65 Db	Certium	RU C-CH.ME92.B.00726	GOST R IEC 60079-0-2011 GOST R IEC 60079-7-2012 GOST R IEC 60079-11-2010 GOST R IEC 60079-14-2011 GOST R IEC 60079-31-2010

JUMO GmbH & Co. KG
Delivery address: Mackenrodtstraße 14
36039 Fulda, Germany
Postal address: 36035 Fulda, Germany
Phone: +49 661 6003-0
Fax: +49 661 6003-607
Email: mail@jumo.net
Internet: www.jumo.net

JUMO Instrument Co. Ltd.
JUMO House
Temple Bank, Riverway
Harlow, Essex, CM20 2DY, UK
Phone: +44 1279 63 55 33
Fax: +44 1279 62 50 29
Email: sales@jumo.co.uk
Internet: www.jumo.co.uk

JUMO Process Control, Inc.
6733 Myers Road
East Syracuse, NY 13057, USA
Phone: +1 315 437 5866
Fax: +1 315 437 5860
Email: info.us@jumo.net
Internet: www.jumousa.com

Dimensions

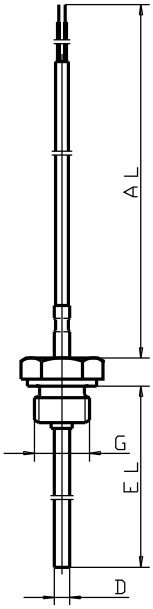

Basic type 902821/80

Basic type 902821/90

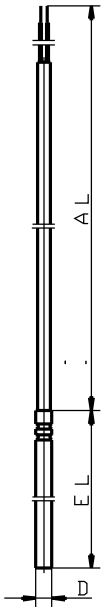

Basic type 902821/81

Basic type 902821/91

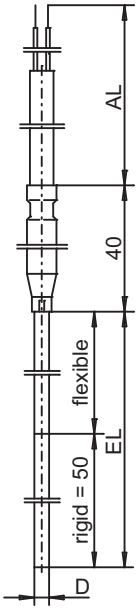

Basic type 902821/82[a, b]

Basic type 902821/92[a, b]

[a] Sheath element diameter:
3 mm: Length of adapter sleeve 40 or 50 mm, diameter 6 mm;
6 mm: Length of adapter sleeve 80 mm, diameter 7 mm.

[b] Maximum temperature at the adapter sleeve: Standard 100 °C; high-temperature version 300 °C, dependent, however, on the maximum admissible connecting cable temperature.

JUMO GmbH & Co. KG
Delivery address: Mackenrodtstraße 14
36039 Fulda, Germany
Postal address: 36035 Fulda, Germany
Phone: +49 661 6003-0
Fax: +49 661 6003-607
Email: mail@jumo.net
Internet: www.jumo.net

JUMO Instrument Co. Ltd.
JUMO House
Temple Bank, Riverway
Harlow, Essex, CM20 2DY, UK
Phone: +44 1279 63 55 33
Fax: +44 1279 62 50 29
Email: sales@jumo.co.uk
Internet: www.jumo.co.uk

JUMO Process Control, Inc.
6733 Myers Road
East Syracuse, NY 13057, USA
Phone: +1 315 437 5866
Fax: +1 315 437 5860
Email: info.us@jumo.net
Internet: www.jumousa.com

Order details

			(1)	**Basic type**
			902821/80	Ex "i" – screw-in RTD temperature probe with connecting cable 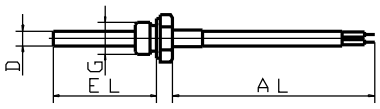
			902821/81	Ex "i" – push-in RTD temperature probe with connecting cable 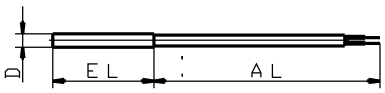
			902821/82	Ex "i" – mineral-insulated RTD temperature probe with connecting cable (operating temperature in area of sheath cable: -50 to +600 °C)[a] 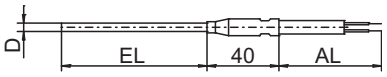
			(2)	**Operating temperature in °C (connecting cable)**
x	x	x	302	-70 to +200 °C
x	x	x	303	-70 to +260 °C
x	x	x	373	-50 to +180 °C (FPM)
x	x	x	378	-50 to +180 °C (silicone)
x	x	x	380	-50 to +200 °C
x	x	x	386	-50 to +260 °C (PTFE)
x	x	x	402	-50 to +400 °C (metal braiding/glass fiber)
		x	415	-50 to +600 °C
x	x	x	478	-40 to +120 °C (RADOX®)
x	x	x	484	-40 to +120 °C (BETAflam®)
x	x	x	572	-30 to +80 °C
x	x	x	724	-5 to +80 °C (PVC)
x	x	x	730	-5 to +105 °C (PVC)
x	x	x	908	5 to 105 °C (PUR)
			(3)	**Measuring insert**
x	x	x	1001	1× Pt100 in 3-wire circuit
x	x	x	1003	1× Pt100 in 2-wire circuit
x	x	x	1005	1× Pt1000 in 2-wire circuit
x	x	x	1011	1× Pt100 in 4-wire circuit
x	x	x	2001	2× Pt100 in 3-wire circuit (for basic type 902821/82 from protection tube diameter 6 mm)[b]
x	x	x	2003	2× Pt100 in 2-wire circuit
x	x	x	2005	2× Pt1000 in 2-wire circuit
x	x		2011	2× Pt100 in 4-wire circuit
x	x		3028	3× Pt100 in 2× 3-wire and 1× 2-wire circuit
			(4)	**Tolerance class according to DIN EN 60751:2009 / IEC 60751:2008**
x	x	x	1	Class B
x	x	x	2	Class A
x	x	x	3	Class AA
			(5)	**Protection tube diameter D in mm (other diameters upon request)**
x	x	x	3	Ø 3 mm
x	x		4	Ø 4 mm
x	x		5	Ø 5 mm
x	x	x	6	Ø 6 mm
x	x		7	Ø 7 mm
x	x		8	Ø 8 mm

JUMO GmbH & Co. KG
Delivery address: Mackenrodtstraße 14
36039 Fulda, Germany
Postal address: 36035 Fulda, Germany
Phone: +49 661 6003-0
Fax: +49 661 6003-607
Email: mail@jumo.net
Internet: www.jumo.net

JUMO Instrument Co. Ltd.
JUMO House
Temple Bank, Riverway
Harlow, Essex, CM20 2DY, UK
Phone: +44 1279 63 55 33
Fax: +44 1279 62 50 29
Email: sales@jumo.co.uk
Internet: www.jumo.co.uk

JUMO Process Control, Inc.
6733 Myers Road
East Syracuse, NY 13057, USA
Phone: +1 315 437 5866
Fax: +1 315 437 5860
Email: info.us@jumo.net
Internet: www.jumousa.com

x	x		9	Ø 9 mm
			(6)	**Insertion length EL in mm**
x	x	x	...	Specification in plain text
			(7)	**Process connection**
	x	x	000	None
x			102	Screw connection G 1/4
x			104	Screw connection G 1/2
x			106	Screw connection G 1
x			114	Screw connection M10 × 1
x			115	Screw connection M10 × 1.5
x			121	Screw connection M14 × 1.5
	x		611	Clamping socket (clamp) DN 10/20 DIN 32676 (AISI 316 L)
	x		613	Clamping socket (clamp) DN 25/40 (1”/1.5”) DIN 32676 (AISI 316 L)
	x		616	Clamping socket (clamp) DN 50 (2”) DIN 32676 (AISI 316 L)
	x		617	Clamping socket (clamp) 2.5” similar to DIN 32676 (AISI 316 L)
x			997	JUMO PEKA hygienic process connection (AISI 316 L) (suitable process connection adapters according to data sheet 409711)
			(8)	**Process connection material**
x	x	x	00	None
x	x		24	CrNi 1.4404 (AISI 316 L)
x	x		26	CrNi 1.4571 (AISI 316 Ti)
x	x		31	CrNi 1.4435 (AISI 316 L)
			(9)	**Connecting cable end (further versions upon request)**
x	x	x	03	Bare connection wires
x	x	x	05	Part stripping of the insulation
x	x	x	11	Ferrules (standard)
x	x	x	13	Plug-in sleeve 6.3
x	x	x	23	Tab connector 6.3
x	x	x	42	Lemosa coupling
x	x	x	56	Machine connector M12 × 1
x	x	x	57	Machine connector M8 × 1
			(10)	**Connecting cable length AL in mm**
x	x	x	...	Specification in plain text
			(11)	**Extra codes**
x	x	x	000	None
x	x		310	Protection tube offset
x	x		315	Bend protection spring
x	x		316	Bend protection tubing
x	x	x	317	Shielded connecting cable (please specify version in plain text)
x	x	x	362	Ex-protection Ex "i" according to Directive 2014/34/EU (ATEX)
x	x	x	658	SIL and PL compatible (only in conjunction with JUMO SIL-certified safety temperature limiters and monitors according to data sheet 701150)

[a] See page 4/8.

[b] For basic type 902821/82 with 3 mm diameter, sheath cable 2× 2-wire circuit, from adapter sleeve 2× 3-wire circuit.

	(1)		(2)		(3)		(4)		(5)		(6)		(7)		(8)		(9)		(10)		(11)	
Order code		-		-		-		-		-		-		-		-		-		/		, ...[a]
Order example	902821/80	-	386	-	1001	-	1	-	3	-	200	-	104	-	26	-	11	-	2500	/	315	

[a] List extra codes in sequence, separated by commas.

JUMO GmbH & Co. KG
Delivery address: Mackenrodtstraße 14
36039 Fulda, Germany
Postal address: 36035 Fulda, Germany
Phone: +49 661 6003-0
Fax: +49 661 6003-607
Email: mail@jumo.net
Internet: www.jumo.net

JUMO Instrument Co. Ltd.
JUMO House
Temple Bank, Riverway
Harlow, Essex, CM20 2DY, UK
Phone: +44 1279 63 55 33
Fax: +44 1279 62 50 29
Email: sales@jumo.co.uk
Internet: www.jumo.co.uk

JUMO Process Control, Inc.
6733 Myers Road
East Syracuse, NY 13057, USA
Phone: +1 315 437 5866
Fax: +1 315 437 5860
Email: info.us@jumo.net
Internet: www.jumousa.com

			(1)	**Basic type**
			902821/90	Ex "e" – screw-in RTD temperature probe with connecting cable 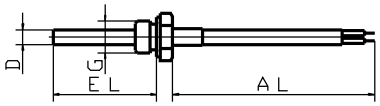
			902821/91	Ex "e" – push-in RTD temperature probe with connecting cable 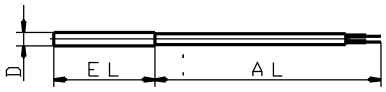
			902821/92	Ex "e" – mineral-insulated RTD temperature probe with connecting cable (operating temperature in area of sheath cable: -50 to +600 °C)[a] 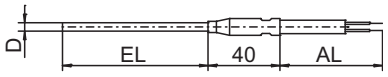
			(2)	**Operating temperature in °C (connecting cable)**
x	x	x	302	-70 to +200 °C
x	x	x	303	-70 to +260 °C
x	x	x	373	-50 to +180 °C (FPM)
x	x	x	378	-50 to +180 °C (silicone)
x	x	x	380	-50 to +200 °C
x	x	x	386	-50 to +260 °C (PTFE)
x	x	x	402	-50 to +400 °C (metal braiding/glass fiber)
		x	415	-50 to +600 °C
x	x	x	478	-40 to +120 °C (RADOX®)
x	x	x	484	-40 to +120 °C (BETAflam®)
x	x	x	572	-30 to +80 °C
x	x	x	724	-5 to +80 °C (PVC)
x	x	x	730	-5 to +105 °C (PVC)
x	x	x	908	5 to 105 °C (PUR)
			(3)	**Measuring insert**
x	x	x	1001	1× Pt100 in 3-wire circuit
x	x	x	1003	1× Pt100 in 2-wire circuit
x	x	x	1005	1× Pt1000 in 2-wire circuit
x	x	x	1011	1× Pt100 in 4-wire circuit
x	x	x	2001	2× Pt100 in 3-wire circuit (for basic type 902821/92 from protection tube diameter 6 mm)[b]
x	x	x	2003	2× Pt100 in 2-wire circuit
x	x	x	2005	2× Pt1000 in 2-wire circuit
x	x		2011	2× Pt100 in 4-wire circuit
x	x		3028	3× Pt100 in 2× 3-wire and 1× 2-wire circuit
			(4)	**Tolerance class according to DIN EN 60751:2009 / IEC 60751:2008**
x	x	x	1	Class B
x	x	x	2	Class A
x	x	x	3	Class AA
			(5)	**Protection tube diameter D in mm (other diameters upon request)**
x	x	x	3	Ø 3 mm
x	x		4	Ø 4 mm
x	x		5	Ø 5 mm
x	x	x	6	Ø 6 mm
x	x		7	Ø 7 mm
x	x		8	Ø 8 mm
x	x		9	Ø 9 mm

JUMO GmbH & Co. KG
Delivery address: Mackenrodtstraße 14
36039 Fulda, Germany
Postal address: 36035 Fulda, Germany
Phone: +49 661 6003-0
Fax: +49 661 6003-607
Email: mail@jumo.net
Internet: www.jumo.net

JUMO Instrument Co. Ltd.
JUMO House
Temple Bank, Riverway
Harlow, Essex, CM20 2DY, UK
Phone: +44 1279 63 55 33
Fax: +44 1279 62 50 29
Email: sales@jumo.co.uk
Internet: www.jumo.co.uk

JUMO Process Control, Inc.
6733 Myers Road
East Syracuse, NY 13057, USA
Phone: +1 315 437 5866
Fax: +1 315 437 5860
Email: info.us@jumo.net
Internet: www.jumousa.com

			(6)	**Insertion length EL in mm**
x	x	x	...	Specification in plain text
			(7)	**Process connection**
	x	x	000	None
x			102	Screw connection G 1/4
x			104	Screw connection G 1/2
x			106	Screw connection G 1
x			114	Screw connection M10 × 1
x			115	Screw connection M10 × 1.5
x			121	Screw connection M14 × 1.5
	x		611	Clamping socket (clamp) DN 10/20 DIN 32676 (AISI 316 L)
	x		613	Clamping socket (clamp) DN 25/40 (1”/1.5”) DIN 32676 (AISI 316 L)
	x		616	Clamping socket (clamp) DN 50 (2”) DIN 32676 (AISI 316 L)
	x		617	Clamping socket (clamp) 2.5” similar to DIN 32676 (AISI 316 L)
x			997	JUMO PEKA hygienic process connection (AISI 316 L) (suitable process connection adapters according to data sheet 409711)
			(8)	**Process connection material**
x	x	x	00	None
x	x		24	CrNi 1.4404 (AISI 316 L)
x	x		26	CrNi 1.4571 (AISI 316 Ti)
x	x		31	CrNi 1.4435 (AISI 316 L)
			(9)	**Connecting cable end (further versions upon request)**
x	x	x	03	Bare connection wires
x	x	x	05	Part stripping of the insulation
x	x	x	11	Ferrules (standard)
x	x	x	13	Plug-in sleeve 6.3
x	x	x	23	Tab connector 6.3
x	x	x	42	Lemosa coupling
x	x	x	56	Machine connector M12 × 1
x	x	x	57	Machine connector M8 × 1
			(10)	**Connecting cable length AL in mm**
x	x	x	...	Specification in plain text
			(11)	**Extra codes**
x	x	x	000	None
x	x		310	Protection tube offset
x	x		315	Bend protection spring
x	x		316	Bend protection tubing
x	x	x	317	Shielded connecting cable (please specify version in plain text)
x	x	x	363	Ex-protection Ex "e" according to Directive 2014/34/EU (ATEX)
x	x	x	658	SIL and PL compatible (only in conjunction with JUMO SIL-certified safety temperature limiters and monitors according to data sheet 701150)

[a] See page 4/8.

[b] For basic type 902821/92 with 3 mm diameter, sheath cable 2× 2-wire circuit, from adapter sleeve 2× 3-wire circuit.

	(1)		(2)		(3)		(4)		(5)		(6)		(7)		(8)		(9)		(10)		(11)	
Order code		-		-		-		-		-		-		-		-		-		/		, ...[a]
Order example	902821/90	-	386	-	1001	-	1	-	3	-	200	-	104	-	26	-	11	-	2500	/	315	

[a] List extra codes in sequence, separated by commas.

JUMO GmbH & Co. KG
Delivery address: Mackenrodtstraße 14, 36039 Fulda, Germany
Postal address: 36035 Fulda, Germany
Phone: +49 661 6003-0
Fax: +49 661 6003-607
e-mail: mail@jumo.net
Internet: www.jumo.net

JUMO Instrument Co. Ltd.
JUMO House
Temple Bank, Riverway
Harlow, Essex CM20 2DY, UK
Phone: +44 1279 635533
Fax: +44 1279 635262
e-mail: sales@jumo.co.uk
Internet: www.jumo.co.uk

JUMO Process Control, Inc.
8 Technology Boulevard
Canastota, NY 13032, USA
Phone: 315-697-JUMO
1-800-554-JUMO
Fax: 315-697-5867
e-mail: info@jumo.us
Internet: www.jumo.us

JUMO STEAMtemp

Push-in resistance thermometers in steam-tight version

- **for temperatures from -70 to +200°C**
- **as single, twin or triple resistance thermometer**
- **in 2-wire, 3-wire or 4-wire circuit**
- **connecting cable in PTFE, FEP and silicone**

Push-in resistance thermometers are preferably used for temperature measurement in sterilizers. Thanks to their special construction, they are highly suitable for application in pressurized atmospheres containing steam. Other applications include plant engineering and laboratories.

The PTFE connecting cable is suitable for use in humid areas within the temperature range -190 to +260°C, the FEP cable from -70 to +200°C. The cable connection incorporates strain relief.

The measuring insert is normally fitted with a Pt100 temperature sensor to EN 60 751, Class A in 2-wire circuit. Versions with 2 or 3 measuring circuits are also available. 3-and 4-wire circuit connections can be provided.

Technical data

Connection	cable ends available as: bare wires, with ferrules, receptacles or multipole connector.
Connecting cable	PTFE, ambient temperature -190 to +260°C FEP, ambient temperature -70 to +200°C silicone, ambient temperature -50 to +150°C connecting cable available with shielding (option)
Protection tube	stainless steel 1.4571, 4mm, 4.5mm, 6mm dia.
Measuring insert	Pt100 temperature sensor, EN 60 751, Cl. A, 2-/3-/4-wire circuit
Protection	IP69

JUMO GmbH & Co. KG
Delivery address: Mackenrodtstraße 14,
36039 Fulda, Germany
Postal address: 36035 Fulda, Germany
Phone: +49 661 6003-0
Fax: +49 661 6003-607
e-mail: mail@jumo.net
Internet: www.jumo.net

JUMO Instrument Co. Ltd.
JUMO House
Temple Bank, Riverway
Harlow, Essex CM20 2DY, UK
Phone: +44 1279 635533
Fax: +44 1279 635262
e-mail: sales@jumo.co.uk
Internet: www.jumo.co.uk

JUMO Process Control, Inc.
8 Technology Boulevard
Canastota, NY 13032, USA
Phone: 315-697-JUMO
1-800-554-JUMO
Fax: 315-697-5867
e-mail: info@jumo.us
Internet: www.jumo.us

Dimensions

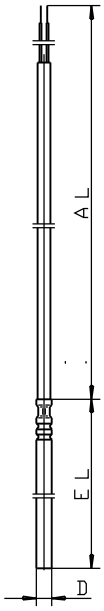

Type 902830/10
Type 902830/30

JUMO GmbH & Co. KG
Delivery address: Mackenrodtstraße 14, 36039 Fulda, Germany
Postal address: 36035 Fulda, Germany
Phone: +49 661 6003-0
Fax: +49 661 6003-607
e-mail: mail@jumo.net
Internet: www.jumo.net

JUMO Instrument Co. Ltd.
JUMO House
Temple Bank, Riverway
Harlow, Essex CM20 2DY, UK
Phone: +44 1279 635533
Fax: +44 1279 635262
e-mail: sales@jumo.co.uk
Internet: www.jumo.co.uk

JUMO Process Control, Inc.
8 Technology Boulevard
Canastota, NY 13032, USA
Phone: 315-697-JUMO
1-800-554-JUMO
Fax: 315-697-5867
e-mail: info@jumo.us
Internet: www.jumo.us

Order details: Push-in resistance thermometers in steam-tight version

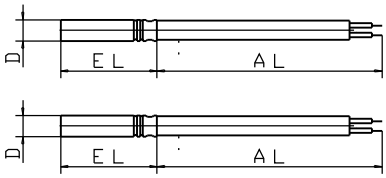

			(1) Basic version
		902830/10	Push-in resistance thermometer, steam-tight
		902830/30	Push-in resistance thermometer, steam-tight, pressure-tight up to 5.0bar
			(2) Operating temperature in °C
	x	302	-70 to +200°C / FEP connecting cable
x		370	-50 to +150°C / PTFE connecting cable
x		371	-50 to +150°C / silicone connecting cable
			(3) Measuring insert
x		1001	1 x Pt100 in 3-wire circuit
x		1003	1 x Pt100 in 2-wire circuit
x	x	1011	1 x Pt100 in 4-wire circuit
x		2001	2 x Pt100 in 3-wire circuit
x	x	2003	2 x Pt100 in 2-wire circuit
x	x	2011	2 x Pt100 in 4-wire circuit (not in conjunction with 371)
x		3028	3 x Pt100 1 x 2-wire circuit, 2 x 3-wire circuit (not in conjunction with 371)
			(4) Tolerance class to EN 60 751
x	x	2	Class A
			(5) Protection tube diameter D in mm
	x	4	4mm
	x	4.5	4.5mm with 2 measuring circuits in 4-wire circuit
x		6	6mm
			(6) Fitting length EL in mm (50 ≤ EL ≤ 500)
	x	50	50mm
x	x	100	100mm
x	x	150	150mm
x	x	200	200mm
x	x	...	please specify in plain text (in 50mm steps)
			(7) Connecting cable end
x	x	03	bare cable ends
x	x	11	ferrules to DIN 46 228 Part 4 (standard)
x		13	receptacle 6.3 to DIN 46 247
x	x	80	multipole connector (specify type in plain text)
			(8) Connecting cable length AL in mm (500 ≤ AL ≤ 500000)
x	x	2500	2500mm (standard)
x	x	...	please specify in plain text (in 500mm steps)
			(9) Extra codes
x	x	000	no extra code
	x	304	without protection tube (sensor enclosed in PTFE sleeve)
x	x	312	curved protection tube R 13mm (only 4.5mm dia. on Type 902830/30) (please specify dimensions in plain text)
x		317	shielded connecting cable

	(1)		(2)		(3)		(4)		(5)		(6)		(7)		(8)		(9)	
Order code	[ ]	-	[ ]	-	[ ]	-	[ ]	-	[ ]	-	[ ]	-	[ ]	-	[ ]	/	[ ]	,...
Order example	902830/10	-	370	-	1011	-	2	-	6	-	100	-	11	-	2500	/	000[1]	

1. List extra codes in sequence, separated by commas.

Stock versions

(1)		(2)		(3)		(4)		(5)		(6)		(7)		(8)		(9)	Sales No.
[ ]	-	[ ]	-	[ ]	-	[ ]	-	[ ]	-	[ ]	-	[ ]	-	[ ]	/	[ ]	
902830/10	-	370	-	1011	-	2	-	6	-	100	-	11	-	2500	/	317	90/00306448
902830/10	-	370	-	2001	-	2	-	6	-	100	-	11	-	2500	/	000	90/00306449
902830/30	-	302	-	1011	-	2	-	4	-	50	-	11	-	2500	/	000	90/00445084
902830/30	-	302	-	2011	-	2	-	4.5	-	50	-	11	-	2500	/	000	90/00445085

JUMO GmbH & Co. KG
Delivery address: Mackenrodtstraße 14,
36039 Fulda, Germany
Postal address: 36035 Fulda, Germany
Phone: +49 661 6003-0
Fax: +49 661 6003-607
E-mail: mail@jumo.net
Internet: www.jumo.net

JUMO Instrument Co. Ltd.
JUMO House
Temple Bank, Riverway
Harlow - Essex CM20 2DY, UK
Phone: +44 1279 63 55 33
Fax: +44 1279 63 52 62
E-mail: sales@jumo.co.uk
Internet: www.jumo.co.uk

JUMO Process Control, Inc.
8 Technology Boulevard
Canastota, NY 13032, USA
Phone: 315-697-JUMO
1-800-554-JUMO
Fax: 315-697-5867
E-mail: info@jumo.us
Internet: www.jumo.us

Level and temperature probes

for utility vehicles as well as construction and agricultural machinery

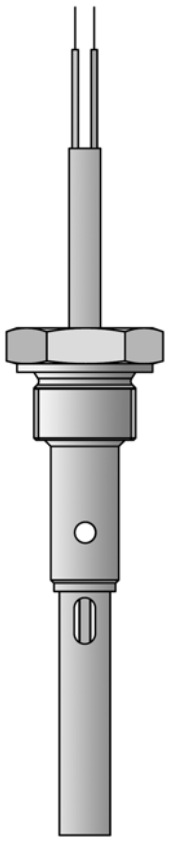

- **Temperature range from -40 to +140 °C**
- **As level or combined level and temperature probes**
- **Connection line: cross-linked polyester**
- **Installation position: standing or suspended**
- **Measuring path of 50 mm or 62 mm**

For optimum motor or gear operation, several parameters must be continuously monitored and corrected in the event of deviations.
The oil level and the oil temperature are two of these parameters.

The combined level and temperature probe supports the vehicle diagnosis of modern utility vehicles, construction and agricultural machinery. This level probe operating according to the hot-wire principle allows to determine the filling level of gear or motor oil throughout a measuring path of up to 100 mm. Only the filling level monitoring will ensure that the motor does not operate with excessive or insufficient oil. This will prevent damage to the motor.

The level probe can also be provided with an additional temperature sensor. The level and temperature probe is equipped with a Pt1000 temperature sensor as per DIN EN 60751, cl. B in 2-wire circuit. The design with Pt100 or Pt500 temperature sensors as well as NTC and semi-conductors are also possible.

The voltage signal transmitted by the hot-wire and the resistance signal from the temperature sensor are separately transmitted to the vehicle electronics for evaluation.

Depending on the customer requirements, the housing can be made of stainless steel, steel or heavy-duty plastics.

The level and temperature probe is designed for a temperature range from -40 to +140 °C in permanent operation.

Technical Data

Connection	Cable ends stripped bare, with connector DIN 72585 (quarter-turn type connector) or as per customer requirements
Cable	Cross-linked polyester, ambient temperature -40 to +150 °C
Process connection	Screw connection M 24x1.5 or as desired by the customer
Thermowell	Stainless steel or galvanized steel (heavy-duty plastics on request)
Temperature probe	Pt1000 DIN EN 60751, cl. B, 2-wire-circuit
Level sensor	Hot-wire principle, ±3 mm tolerance
Measuring path	50 mm or 62 mm (different measuring paths on request)
Installation position	standing (process connection in the media) suspended (process connection not in the media)

JUMO GmbH & Co. KG
Delivery address: Mackenrodtstraße 14,
36039 Fulda, Germany
Postal address: 36035 Fulda, Germany
Phone: +49 661 6003-0
Fax: +49 661 6003-607
E-mail: mail@jumo.net
Internet: www.jumo.net

JUMO Instrument Co. Ltd.
JUMO House
Temple Bank, Riverway
Harlow - Essex CM20 2DY, UK
Phone: +44 1279 63 55 33
Fax: +44 1279 63 52 62
E-mail: sales@jumo.co.uk
Internet: www.jumo.co.uk

JUMO Process Control, Inc.
8 Technology Boulevard
Canastota, NY 13032, USA
Phone: 315-697-JUMO
1-800-554-JUMO
Fax: 315-697-5867
E-mail: info@jumo.us
Internet: www.jumo.us

Dimensions

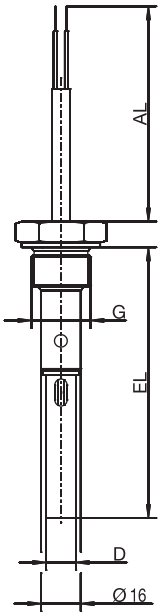

Type 902880/10

JUMO GmbH & Co. KG
Delivery address: Mackenrodtstraße 14, 36039 Fulda, Germany
Postal address: 36035 Fulda, Germany
Phone: +49 661 6003-0
Fax: +49 661 6003-607
E-mail: mail@jumo.net
Internet: www.jumo.net

JUMO Instrument Co. Ltd.
JUMO House
Temple Bank, Riverway
Harlow - Essex CM20 2DY, UK
Phone: +44 1279 63 55 33
Fax: +44 1279 63 52 62
E-mail: sales@jumo.co.uk
Internet: www.jumo.co.uk

JUMO Process Control, Inc.
8 Technology Boulevard
Canastota, NY 13032, USA
Phone: 315-697-JUMO
1-800-554-JUMO
Fax: 315-697-5867
E-mail: info@jumo.us
Internet: www.jumo.us

Order details: Level and temperature probes for utility vehicles as well as construction and agricultural machinery

		(1)	**Basic type**
	902880/10		Level and temperature probes for utility vehicles as well as construction and agricultural machinery
		(2)	**Operating temperature range in °C/cable type**
x	481		-40 to +140 °C
		(3)	**Measuring path**
x	50		50 mm
x	62		62 mm
		(4)	**Measuring insert**
x	0000		without temperature probe
x	1003		1x Pt100 in 2-wire circuit
x	1004		1x Pt500 in 2-wire circuit
x	1005		1x Pt1000 in 2-wire circuit
x	9999		different sensors on request (please specify in plain text)
		(5)	**Thermowell diameter D in mm**
x	12		Ø 12 mm
		(6)	**Fitting length EL in mm**
x	110		110 mm
x	140		140 mm
x	170		170 mm
x	180		180 mm
x	200		200 mm
x	220		220 mm
		(7)	**Process connection**
x	133		Screw connection M 24x1.5
x	999		Customer specification (please specify in plain text)
		(8)	**Cable termination**
x	03		stripped wires
x	79		Connector DIN 72585 (quarter-turn type connector)
x	99		Customer specification (please specify in plain text)
		(9)	**Connection cable length AL in mm (110 ≤ AL ≤ 10000)**
x	110		110 mm
x	400		400 mm
x	550		550 mm
x	1000		1000 mm
x	. . .		Please specify in plain text (50 mm steps)
		(10)	**Installation position**
x	1		standing (process connection in the media)
x	2		suspended (process connection not in the media)
		(11)	**Extra codes**
x	000		None
x	852		PA6 corrugated hose around the connection line

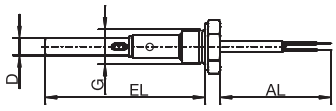

	(1)		(2)		(3)		(4)		(5)		(6)		(7)		(8)		(9)		(10)		(11)
Order code		-		-		-		-		-		-		-		-		-		/	
Order example	902880/10	-	481	-	50	-	1005	-	12	-	220	-	133	-	79	-	1000	-	1	/	000

JUMO GmbH & Co. KG
Delivery address: Mackenrodtstraße 14,
36039 Fulda, Germany
Postal address: 36035 Fulda, Germany
Phone: +49 661 6003-0
Fax: +49 661 6003-607
E-mail: mail@jumo.net
Internet: www.jumo.net

JUMO Instrument Co. Ltd.
JUMO House
Temple Bank, Riverway
Harlow - Essex CM20 2DY, UK
Phone: +44 1279 63 55 33
Fax: +44 1279 63 52 62
E-mail: sales@jumo.co.uk
Internet: www.jumo.co.uk

JUMO Process Control, Inc.
8 Technology Boulevard
Canastota, NY 13032, USA
Phone: 315-697-JUMO
1-800-554-JUMO
Fax: 315-697-5867
E-mail: info@jumo.us
Internet: www.jumo.us

JUMO CANtrans T
RTD temperature probe with CANopen output

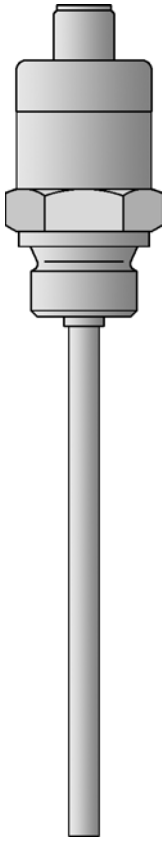

- **For temperatures from -50 to +450°C**
- **Available as single or double RTD temperature probes**
- **Vibration-proof design**
- **Limit value monitoring**
- **Configuration via standard CANopen software tools**

RTD temperature probes are preferentially used for measuring temperatures in liquids and gases. A key feature is the reliable sealing of this installation type for vacuum and overpressure. Areas of application are, amongst others, in medical technology, mechanical engineering, drive technology, utility vehicles, and railroad systems.
The measuring insert is equipped with a Pt 1000 temperature sensor per DIN EN 60 751, Class B, as a standard. The measured temperature value is digitized, linearized and provided via the serial bus protocol CANopen for further processing (CAN slave). A large number of useful additional functions are realized via the DS 404 device profile. All settings are possible via standard CANopen software tools.

Also available, a pressure transducer with CANopen output, please refer to data sheet 40.2055

Technical Data

Connection	Round plug M12x1, 5-pin per IEC 60 947-5-2
Process connection	Threaded, stainless steel 1.4571
Sheath	stainless steel 1.4571
Measuring insert	Pt 1000 temperature sensor per DIN EN 60 751, Class B, two-wire circuit
Protection class	IP67, per DIN EN 60 529, with connection plug screwed on
Response time	$t_{0,9}$ = 12 s, in water 0.2 m/s

JUMO GmbH & Co. KG
Delivery address: Mackenrodtstraße 14, 36039 Fulda, Germany
Postal address: 36035 Fulda, Germany
Phone: +49 661 6003-0
Fax: +49 661 6003-607
E-mail: mail@jumo.net
Internet: www.jumo.net

JUMO Instrument Co. Ltd.
JUMO House
Temple Bank, Riverway
Harlow - Essex CM20 2DY, UK
Phone: +44 1279 63 55 33
Fax: +44 1279 63 52 62
E-mail: sales@jumo.co.uk
Internet: www.jumo.co.uk

JUMO Process Control, Inc.
8 Technology Boulevard
Canastota, NY 13032, USA
Phone: 315-697-JUMO
1-800-554-JUMO
Fax: 315-697-5867
E-mail: info@jumo.us
Internet: www.jumo.us

CAN transducer

Protocol	CiA DS 301, V4.02, CANopen Slave
Profile	CiA DS 404, V1.2 Measuring Devices and Closed-Loop Controllers
Baud rate	20 kBaud to 1 MBaud, setting via LSS or SDO
Module ID	1 to 127, setting via LSS or SDO
PDO	0 Rx, 1 Tx
SDO	1 Rx, 1 Tx
Emergency	yes
Heart Beat	yes
LSS	yes
SYNC	yes
Operation, project planning	All parameters are accessible via the CANopen object directory (EDS) and configurable via standard CANopen software tools.
Input	
Measurement input	Pt 1000 DIN EN 60 751, Class B
Measurement range limits	-50 to +150 °C / -50 to +450 °C
Measurement rate	250 ms
Output	
Output signal	CANopen per CiA DS 404 V1.2, in °C, can be changed to °F, K Decimal place selectable 0, 1, 2
Transmission behavior	temperature linear
Electrical connection	Round plug M12x1, 5-pin per IEC 60 947-5-2
Voltage supply	
Voltage supply	DC 10 to 30 V
Current consumption	max. approx. 45 mA
Monitoring	
	Measuring circuit - Measured value underrange (freely selectable lower limit) - Measured value overrange (freely selectable upper limit) Probe short-circuit Probe break
Additional functions	
	min./max. measured value memory
	Precise adjustment
	Change-over °C, °F, K
	Decimal places selectable 0, 1, 2
Environmental influences	
Operating temperature range	-20 to +85 °C
Storage temperature range	-40 to +85 °C
Temperature influence	≤ ± 0.0025 % / K Deviation from 22 °C of the measuring range span
Accuracy	Class B per DIN EN 60 751 max. ± 0.2 % of the measuring range span
EMC	EN 61 326
Emitted interference, interference resistance	Class B, industrial standard
Mechanical shock	per DIN IEC 68-2-27 (for type 902910/10) EL 50 mm -> 50 g / 3 ms; EL 100 mm -> 30 g / 3 ms EL 200 mm -> 15 g / 3 ms
Mechanical vibrations	per DIN IEC 68-2-6 (for type 902910/10) EL 50 mm max. 10 g at 10 to 2000 Hz EL 100 mm max. 5 g at 10 to 300 Hz EL 200 mm max. 2 g at 10 to 100 Hz
Protection class	IP67, per EN 60 529, with connection plug screwed on

JUMO GmbH & Co. KG
Delivery address: Mackenrodtstraße 14, 36039 Fulda, Germany
Postal address: 36035 Fulda, Germany
Phone: +49 661 6003-0
Fax: +49 661 6003-607
E-mail: mail@jumo.net
Internet: www.jumo.net

JUMO Instrument Co. Ltd.
JUMO House
Temple Bank, Riverway
Harlow - Essex CM20 2DY, UK
Phone: +44 1279 63 55 33
Fax: +44 1279 63 52 62
E-mail: sales@jumo.co.uk
Internet: www.jumo.co.uk

JUMO Process Control, Inc.
8 Technology Boulevard
Canastota, NY 13032, USA
Phone: 315-697-JUMO
1-800-554-JUMO
Fax: 315-697-5867
E-mail: info@jumo.us
Internet: www.jumo.us

Connection diagram

Round plug M12x1
5-pin per
IEC 60 947-5-2

Connection		Connection assignment
Voltage supply DC 10 to 30V	V+	2
	V-	3
Output CANopen	Schielding	1
	CAN_H	4
	CAN_L	5

Dimensions

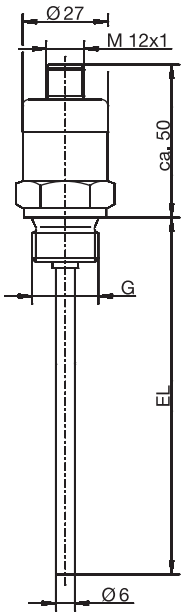

Type 902910/10

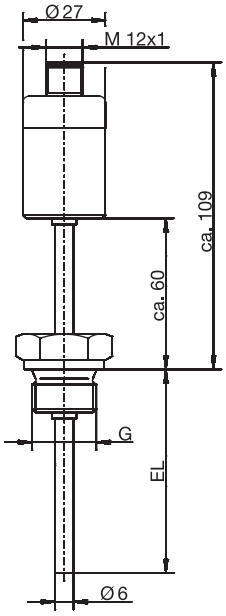

Type 902910/12

Block diagram

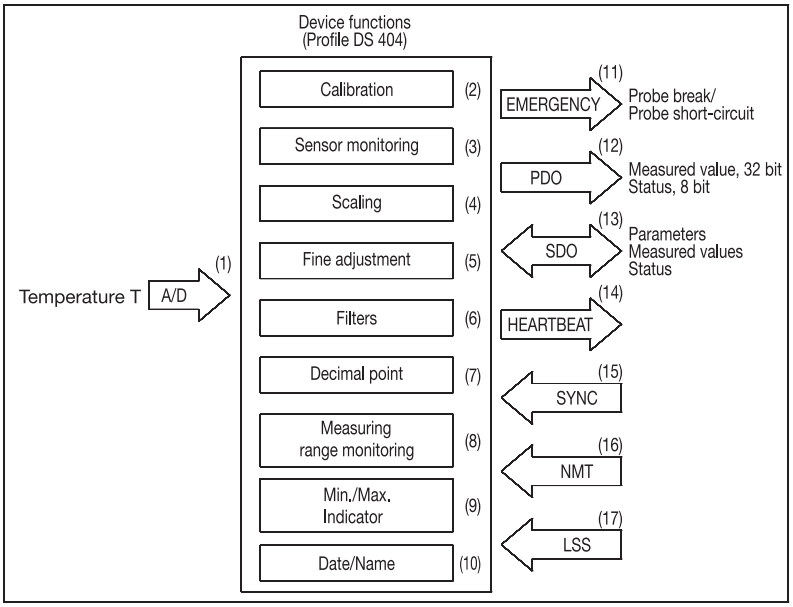

Function

(1) The measured temperature value is digitized.
(2) The temperature signal is digitally factory adjusted.
(3) The probe monitoring system permanently checks the correct function of the probe signal and initiates high-priority emergency telegrams in the event of an error.
(4) The measured temperature value can be scaled to any measuring unit (or as % of the measuring range).
(5) The precise adjustment has a freely settable characteristic curve offset.
(6) Undesirable signal fluctuations can be suppressed using the configurable filter constant.
(7) The measured value is transmitted with a freely selectable decimal place.
(8) The measuring range monitoring has freely selectable upper and lower limits. The result is transmitted as a status byte in addition to the measured value in the PDO telegram.
(9) The fly back function saves the minimum and maximum measured temperature value.
(10) Date and name of the last maintenance work can be saved.
(11) The emergency telegram is initiated in the event of a defective probe.
(12) The PDO telegram contains the 32 bit measured value and the 8 bit status. The measured value output can be controlled via various trigger conditions.
(13) SDO telegrams can be used to set parameters as well as request measured values and the status.
(14) The heartbeat signal can be used to additionally monitor the function of the transducer.
(15) The Sync command can be used to additionally control measured value transmission.
(16) The NMT telegrams serve to control the operating status of the transducer.
(17) The CAN module ID and the CAN baud rate are set optionally via LSS or SDO.

JUMO GmbH & Co. KG
Delivery address: Mackenrodtstraße 14, 36039 Fulda, Germany
Postal address: 36035 Fulda, Germany
Phone: +49 661 6003-0
Fax: +49 661 6003-607
E-mail: mail@jumo.net
Internet: www.jumo.net

JUMO Instrument Co. Ltd.
JUMO House
Temple Bank, Riverway
Harlow - Essex CM20 2DY, UK
Phone: +44 1279 63 55 33
Fax: +44 1279 63 52 62
E-mail: sales@jumo.co.uk
Internet: www.jumo.co.uk

JUMO Process Control, Inc.
8 Technology Boulevard
Canastota, NY 13032, USA
Phone: 315-697-JUMO
1-800-554-JUMO
Fax: 315-697-5867
E-mail: info@jumo.us
Internet: www.jumo.us

Order details: JUMO CANtrans T RTD temperature probe with CANopen output

(1) Basic type

902910/10 — RTD temperature probes with CANopen output

902910/12 — RTD temperature probes with CANopen output, Neck tube for higher temperatures

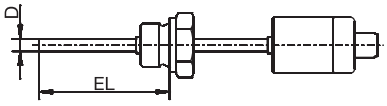

			(2) Operating temperature in °C
x		370	-50 to +150°C
	x	404	-50 to +450°C
			(3) Measuring insert
x	x	1005	1x Pt 1000
x	x	2005	2x Pt 1000
			(4) Tolerance class per DIN EN 60 751
x	x	1	Class B (standard)
x	x	2	Class A
			(5) Sheath diameter D in mm
x	x	6	Ø 6mm
			(6) Fitting length EL in mm (50 ≤ EL ≤ 500)
x	x	50	50mm
x	x	100	100mm
x	x	150	150mm
x	x	200	200mm
x	x	250	250mm
x	x	...	Please specify in plain text (50mm steps)
			(7) Process connection
x	x	102	Screw connection thread 1/4“ pipe
x	x	103	Screw connection thread 3/8“ pipe
x	x	104	Screw connection thread 1/2“ pipe
x	x	121	Screw connection M14x1.5
x	x	126	Screw connection M18x1.5
x	x	128	Screw connection M20x1.5
x	x	144	Screw connection thread 1/2“-14NPT pipe
			(8) Extra codes
x	x	000	None
x	x	100	Customer-specific factory setting
x	x	310	Sheath stepped down

	(1)		(2)		(3)		(4)		(5)		(6)		(7)		(8)	
Order code	[ ]	-	[ ]	-	[ ]	-	[ ]	-	[ ]	-	[ ]	-	[ ]	/	[ ]	, ...[1]
Order example	902910/10	-	370	-	1005	-	1	-	6	-	50	-	102	/	000	

Accessories for RTD temperature probe with CANopen output

	Sales No.:
5-pin contact box M12x1, straight, with fixed gated connection line, length 5m	90/00337625
5-pin contact box M12x1, angled, with fixed gated connection line, length 2m	90/00375164
5-pin contact box M12x1, straight, without connection line to be patched by the customer	90/00419130
5-pin contact box M12x1, angled, without connection line to be patched by the customer	90/00419133
T-shaped piece	90/00419129
Termination resistor for CANopen bus, with plug M12x1	40/00461591
Extension line, length 2m, 5-pin, with plug and socket M12x1	90/00461589
PC-CAN interface for USB interface	40/00449941
PC configuration software for CANopen	40/00449942
EDS files on disk	90/00434520
EDS files, per download (www.jumo.net, see product information)	-
Operating manual, per download (www.jumo.net, see product information)	-

[1] List extra codes in sequence, separated by commas.

JUMO GmbH & Co. KG
Delivery address: Mackenrodtstraße 14
36039 Fulda, Germany
Postal address: 36035 Fulda, Germany
Phone: +49 661 6003-0
Fax: +49 661 6003-607
Email: mail@jumo.net
Internet: www.jumo.net

JUMO Instrument Co. Ltd.
JUMO House
Temple Bank, Riverway
Harlow, Essex CM 20 2DY, UK
Phone: +44 1279 63 55 33
Fax: +44 1279 62 50 29
Email: sales@jumo.co.uk
Internet: www.jumo.co.uk

JUMO Process Control, Inc.
6733 Myers Road
East Syracuse, NY 13057, USA
Phone: +1 315 437 5866
Fax: +1 315 437 5860
Email: info.us@jumo.net
Internet: www.jumousa.com

JUMO dTRANS T1000

Temperature sensor with IO-Link

Application

- Process automation
- Machines for the food and beverage industry
- General mechanical and apparatus engineering

Brief description

The temperature sensor is used for temperature measurement and monitoring. The effect of the temperature on a resistance RTD temperature probe generates a signal, which is amplified, digitalized and processed.

The temperature sensor is equipped with an IO-Link interface as per specification 1.1. IO-Link supports bidirectional communication and is used to exchange the process data, parameters, diagnostic information and status messages. The two green LEDs are permanently lit as soon as power is supplied to the device. Once an IO-Link connection is established, the LEDs flash.

The switching behavior and the switching thresholds of the switching outputs (max. 2 pcs.; p or n switching) can be individually configured, as can many other parameters. Any IO-Link master can be used for the configuration.

The temperature sensor is thus suitable for use in plant and mechanical engineering in connections to automation systems. Many process connections are available to the user.

Type 902915

Customer benefits

- IO-Link
  - Multi-vendor point-to-point connection
  - Open standard with maximum transparency to the field level (IEC 61131-9)
  - Inexpensive, pre-fabricated connecting cable (no wiring errors)
  - Simple and uniform wiring and startup thanks to standardized interface
- Industry 4.0: pervasive communication from the control to the sensors
  - Retrieval of process data and diagnostic information
  - Dynamic parameter changes
- More safety during sensor replacement
  - Automatic parameterization possible
  - Replacement with sensors of same type, but with different properties, can be detected
- Optimization of the production process through communication down to the lowest field level
- Reduction of mounting and startup times
- Reduction of maintenance and service costs with simultaneous increase in plant availability

Special features

- Small, compact, robust
- Stainless steel, fully welded
- Various process connections
- Hygienic connections
- Simple startup
- Easy sensor replacement
- Proven accuracy
- Connection via IO-Link master
- LED status display
- Also available as a pressure sensor with IO-Link; see data sheet 402058

JUMO GmbH & Co. KG
Delivery address: Mackenrodtstraße 14
36039 Fulda, Germany
Postal address: 36035 Fulda, Germany
Phone: +49 661 6003-0
Fax: +49 661 6003-607
Email: mail@jumo.net
Internet: www.jumo.net

JUMO Instrument Co. Ltd.
JUMO House
Temple Bank, Riverway
Harlow, Essex CM 20 2DY, UK
Phone: +44 1279 63 55 33
Fax: +44 1279 62 50 29
Email: sales@jumo.co.uk
Internet: www.jumo.co.uk

JUMO Process Control, Inc.
6733 Myers Road
East Syracuse, NY 13057, USA
Phone: +1 315 437 5866
Fax: +1 315 437 5860
Email: info.us@jumo.net
Internet: www.jumousa.com

Technical data

Input

Sensor element	RTD temperature probe Pt1000
Standard	DIN EN 60751
Measuring range	902915/10: -50 to +150 °C 902915/30: -50 to +260 °C
Sensor accuracy	Class A, ±(0.15 + 0.002 × ItI) °C[a] Class AA, ±(0.10 + 0.0017 × ItI) °C[a]
Connection type	Resistance measurement 4-wire
Calibration accuracy of the electronic components	≤ ±(0.08 %)[b]
Ambient temperature influence	≤ 0.0025 %/K[b, c]
Measuring current	≤ 500 µA
Sampling rate	160 ms
Input filter	Digital filter, 2nd order; filter constant can be set
Galvanic isolation	to the protection tube; no galvanic isolation between sensor and output

[a] ItI = temperature value in °C regardless of the prefix sign.
[b] All accuracy specifications in % relative to the respective measuring range
[c] Relative to the temperature deviation at the calibration point (25 °C ±5 K)

Measuring circuit monitoring

Process data invalid	IO-Link event configurable; appears in the process value as an error value
Measuring range overflow	
Measuring range underflow	
Device hardware fault	

Output

Number	1 output in IO-Link operation (output signal according to IO-Link communication standard version 1.1; see section "Interface", page 3) 2 outputs for switch operation (SIO mode; SIO = standard IO)
Switching functions configurable	Hysteresis function or window function N/C or N/O contact Output p switching (PNP) or n switching (NPN) Switch-on/switch-off delay
Switching current	≤100 mA per output
Voltage drop at switching transistor	≤2 V
Short-circuit proof	Yes (clocked)
Reverse polarity protected	Yes
Current limiting	Yes
Hysteresis	
For hysteresis function	Configurable
For window function	Fixed setting (symmetrical; ±0.25 % of the measuring range)
Switch-on, switch-off delay	0 to 100 s

JUMO GmbH & Co. KG
Delivery address: Mackenrodtstraße 14
36039 Fulda, Germany
Postal address: 36035 Fulda, Germany
Phone: +49 661 6003-0
Fax: +49 661 6003-607
Email: mail@jumo.net
Internet: www.jumo.net

JUMO Instrument Co. Ltd.
JUMO House
Temple Bank, Riverway
Harlow, Essex CM 20 2DY, UK
Phone: +44 1279 63 55 33
Fax: +44 1279 62 50 29
Email: sales@jumo.co.uk
Internet: www.jumo.co.uk

JUMO Process Control, Inc.
6733 Myers Road
East Syracuse, NY 13057, USA
Phone: +1 315 437 5866
Fax: +1 315 437 5860
Email: info.us@jumo.net
Internet: www.jumousa.com

Response time	In water 0.4 m/s	In air 3.0 m/s
Protection tube Ø 6 mm (standard)	$t_{0.5}$ = 5 s; $t_{0.9}$ = 12 s	$t_{0.5}$ = 40 s; $t_{0.9}$ = 110 s
Protection tube Ø 6 mm (offset by Ø 3.5 mm)	$t_{0.5}$ = 2 s; $t_{0.9}$ = 5 s	$t_{0.5}$ = 25 s; $t_{0.9}$ = 85 s
Protection tube Ø 3 mm (PA 379)	$t_{0.5}$ = 1.5 s; $t_{0.9}$ = 4 s	$t_{0.5}$ = 15 s; $t_{0.9}$ = 50 s

Interface

Communication interface	IO-Link device V 1.1, downward compatible to V 1.0
Data transfer rate (baud rate)	COM 3 (230.4 kBaud)
Max. cable length	20 m, unshielded
Min. cycle time	2 ms
IO Device Description (IODD)	Depending on the ordered input range; available on the manufacturer's website www.jumo.de or at http://ioddfinder.io-link.com

Electrical data

Voltage supply	
In IO-Link operation	DC 18 to 32 V
In switch operation	DC 9.6 to 32 V
Nominal voltage	DC 24 V
Current consumption	
In idle mode	≤12 mA (at nominal voltage)
In IO-Link operation	≤20 mA (at nominal voltage)
In switch operation	≤200 mA (at nominal voltage) and with 2 switching outputs
Electrical safety	Protection rating III according to DIN EN 61140
Intended use	Temperature measurement in industrial plants

The auxiliary energy of the temperature sensor must meet SELV requirements; optionally, an energy-limited current circuit acc. to 9.3 of DIN EN 61010-1 and UL 61010-1 can be used.

Mechanical features

Materials	
Protection tube	Stainless steel 1.4404 (1.4435 for clamp acc. to DIN 32676)
Process connection	Stainless steel 1.4404 (1.4435 for clamp acc. to DIN 32676)
Housing	Stainless steel
Installation position	Any
Weight[a]	902915/10 with PA 104 and EL = 100 mm: approx. 80 g 902915/30 with PA 104 and EL = 100 mm: approx. 120 g

[a] The weight of the temperature sensor depends on the process connection (PA) and the insertion length (EL).

JUMO GmbH & Co. KG
Delivery address: Mackenrodtstraße 14
36039 Fulda, Germany
Postal address: 36035 Fulda, Germany
Phone: +49 661 6003-0
Fax: +49 661 6003-607
Email: mail@jumo.net
Internet: www.jumo.net

JUMO Instrument Co. Ltd.
JUMO House
Temple Bank, Riverway
Harlow, Essex CM 20 2DY, UK
Phone: +44 1279 63 55 33
Fax: +44 1279 62 50 29
Email: sales@jumo.co.uk
Internet: www.jumo.co.uk

JUMO Process Control, Inc.
6733 Myers Road
East Syracuse, NY 13057, USA
Phone: +1 315 437 5866
Fax: +1 315 437 5860
Email: info.us@jumo.net
Internet: www.jumousa.com

Environmental influences

Admissible temperatures	
Medium	902915/10: -50 to +150 °C
	902915/30: -50 to +260 °C
Ambient temperature[a]	-40 to +85 °C (ambient temperature range of the head)
Storage	-40 to +85 °C
Resistance to climatic conditions	
During operation	≤100 % humidity without condensation on the outer skin of the device
During storage	≤90 % relative humidity without condensation
Climate class	3K7 acc. to DIN EN 60721-3-3
Admissible mechanical load	
Vibration resistance	10 g, at 10 to 500 Hz acc. to DIN EN 60068-2-6
Shock resistance	20 g for 11 ms according to DIN EN 60068-2-27
	50 g for 1 ms according to DIN EN 60068-2-27
Process media	Liquid and gaseous media
Protection type	According to DIN EN 60529
With mating connector	IP66/IP67/IP69
Electromagnetic compatibility	According to EN 61326-2-3
Interference emission	Class B[b]
Interference immunity	Industrial requirement

[a] Basic type 902915/10: At process temperatures above 120 °C, the maximum admissible ambient temperature is 60 °C (stated at nominal voltage DC 24 V).
Basic type 902915/30: No restrictions (stated at nominal voltage DC 24 V).

[b] The product is suitable for industrial use as well as for households and small businesses.

Process connections

Process connection (PC)	000	103 to 104	379	380	550 to 554	601 to 605
Protection fitting material	1.4404					
Operating temperature in °C[a]	-50 to +260	-50 to +260	-50 to +150	-50 to +260	-50 to +260	-50 to +260
Admissible pressure in bar	-	40	16	16	According to DIN 11864[b]	According to DIN 11851[b]
Process connection (PC)	611 to 617	681 to 682	684 to 686	755 to 758	997	
Protection fitting material	1.4435[c]	1.4404				
Operating temperature in °C[a]	-50 to +260	-50 to +150	-50 to +260	-10 to +200	-50 to +150	
Admissible pressure in bar	According to DIN 32676[b]	10	10	16	10	

[a] depending on the seal used

[b] The approval pressures are designed for an operating temperature range of -10 to +140 °C given use of suitable clamps and sealing materials.

[c] According to Basler Norm II

The maximum possible process pressure depends on different influences, e.g. design type, process connection, and process temperature.

JUMO GmbH & Co. KG
Delivery address: Mackenrodtstraße 14
36039 Fulda, Germany
Postal address: 36035 Fulda, Germany
Phone: +49 661 6003-0
Fax: +49 661 6003-607
Email: mail@jumo.net
Internet: www.jumo.net

JUMO Instrument Co. Ltd.
JUMO House
Temple Bank, Riverway
Harlow, Essex CM 20 2DY, UK
Phone: +44 1279 63 55 33
Fax: +44 1279 62 50 29
Email: sales@jumo.co.uk
Internet: www.jumo.co.uk

JUMO Process Control, Inc.
6733 Myers Road
East Syracuse, NY 13057, USA
Phone: +1 315 437 5866
Fax: +1 315 437 5860
Email: info.us@jumo.net
Internet: www.jumousa.com

Dimensions

Type 902915/10 and type 902915/30 Without process connection (PA) 000	Type 902915/10 with PA 103-104 (left) Type 902915/30 with PA 103-104 (right)
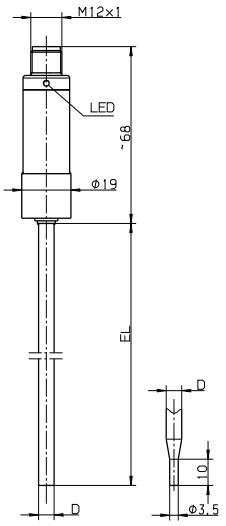	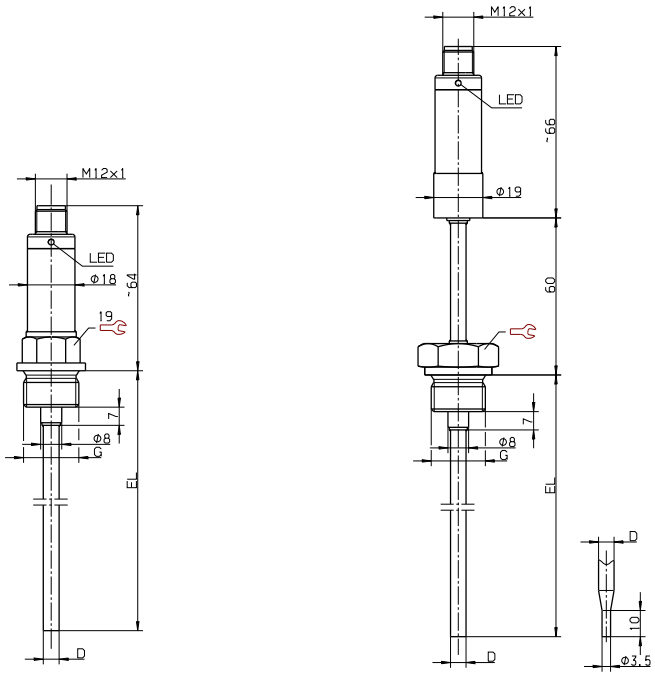

Type 902915/10 with PA 379	Type 902915/10 with PA 380 (left) Type 902915/30 with PA 380 (right)
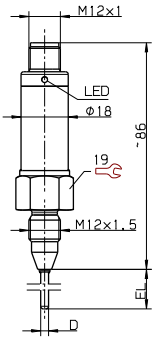	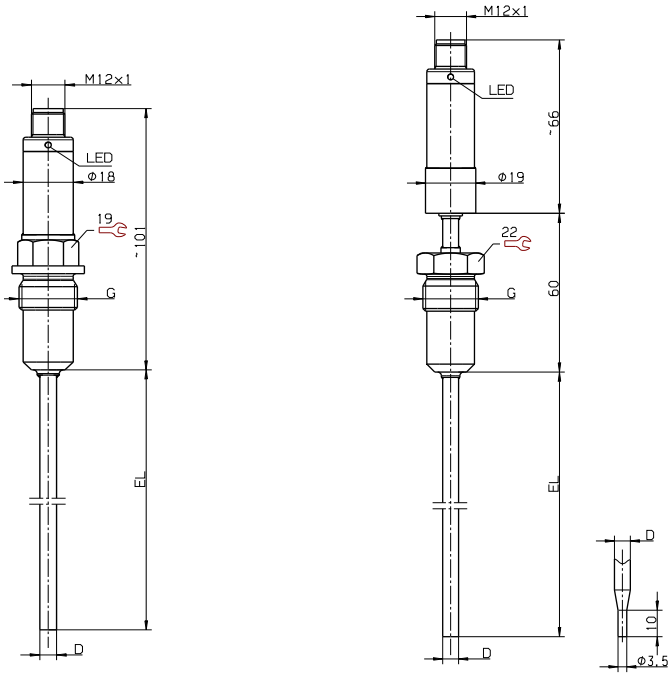

JUMO GmbH & Co. KG
Delivery address: Mackenrodtstraße 14
36039 Fulda, Germany
Postal address: 36035 Fulda, Germany
Phone: +49 661 6003-0
Fax: +49 661 6003-607
Email: mail@jumo.net
Internet: www.jumo.net

JUMO Instrument Co. Ltd.
JUMO House
Temple Bank, Riverway
Harlow, Essex CM 20 2DY, UK
Phone: +44 1279 63 55 33
Fax: +44 1279 62 50 29
Email: sales@jumo.co.uk
Internet: www.jumo.co.uk

JUMO Process Control, Inc.
6733 Myers Road
East Syracuse, NY 13057, USA
Phone: +1 315 437 5866
Fax: +1 315 437 5860
Email: info.us@jumo.net
Internet: www.jumousa.com

Type 902915/10 with PA 550-554 (left)
Type 902915/30 with PA 550-554 (right)

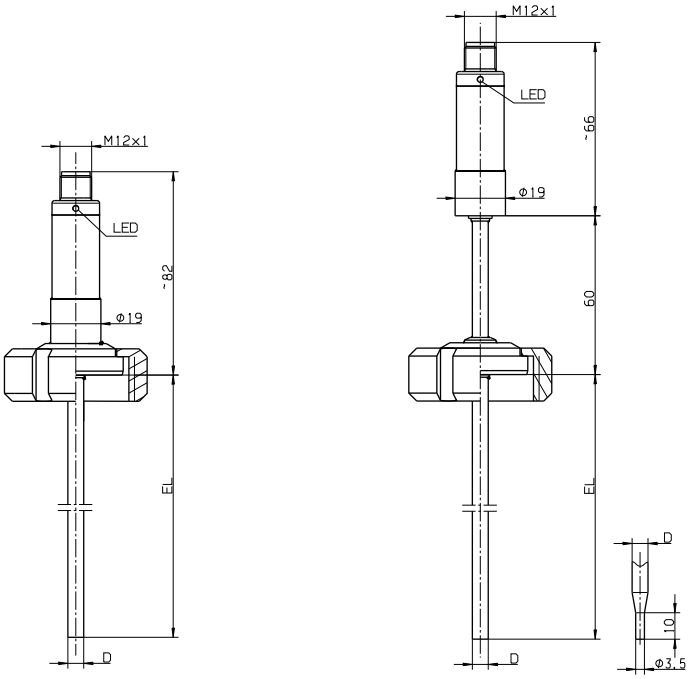

Type 902915/10 with PA 601 (left)
Type 902915/10 with PA 604-605 (center)
Type 902915/30 with PA 601-605 (right)

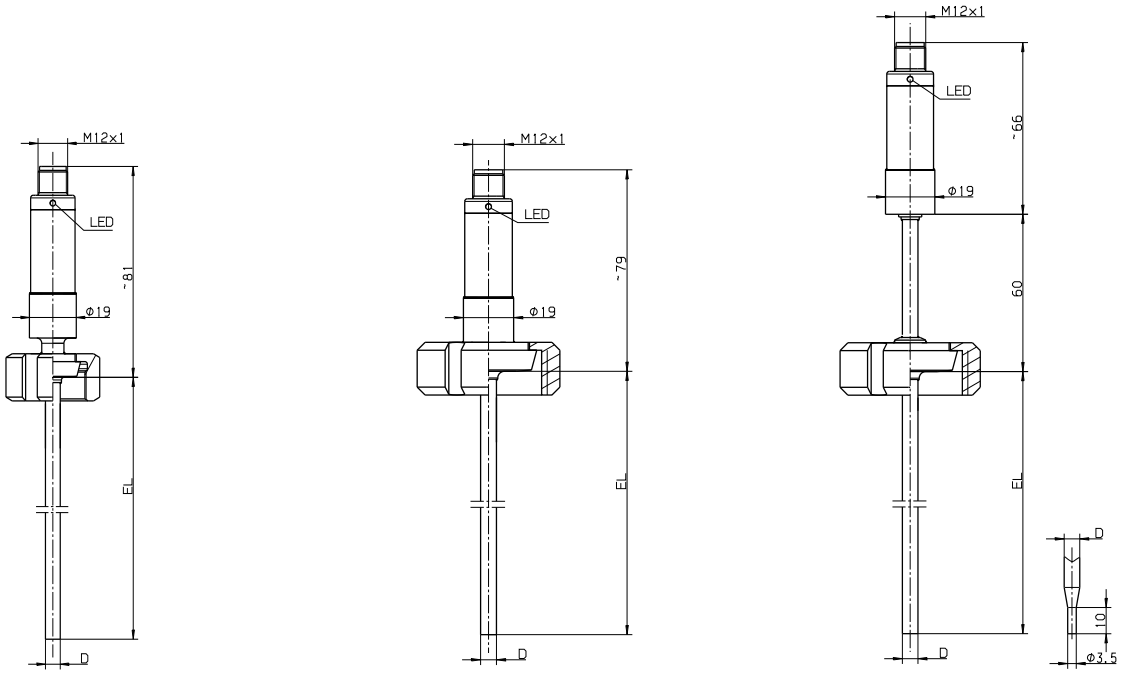

JUMO GmbH & Co. KG
Delivery address: Mackenrodtstraße 14
36039 Fulda, Germany
Postal address: 36035 Fulda, Germany
Phone: +49 661 6003-0
Fax: +49 661 6003-607
Email: mail@jumo.net
Internet: www.jumo.net

JUMO Instrument Co. Ltd.
JUMO House
Temple Bank, Riverway
Harlow, Essex CM 20 2DY, UK
Phone: +44 1279 63 55 33
Fax: +44 1279 62 50 29
Email: sales@jumo.co.uk
Internet: www.jumo.co.uk

JUMO Process Control, Inc.
6733 Myers Road
East Syracuse, NY 13057, USA
Phone: +1 315 437 5866
Fax: +1 315 437 5860
Email: info.us@jumo.net
Internet: www.jumousa.com

Type 902915/10 with PA 611-617 (left) Type 902915/30 with PA 611-617 (right)	Type 902915/10 with PA 681
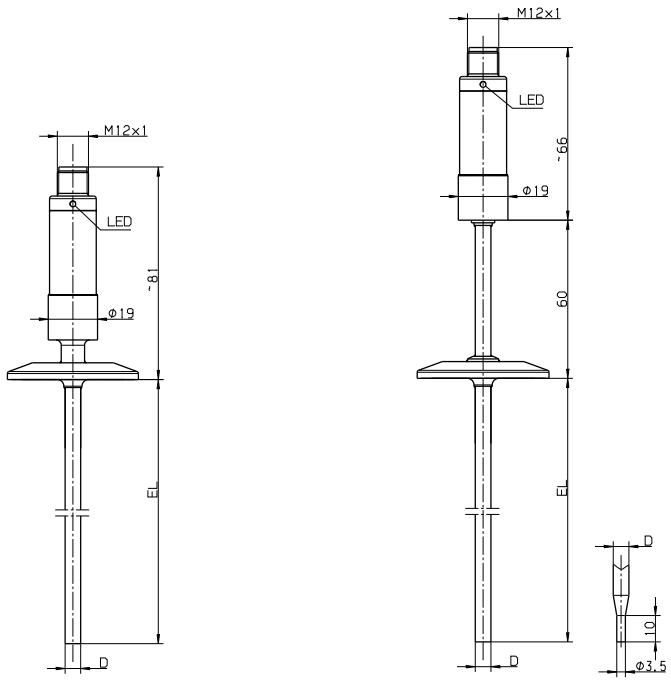	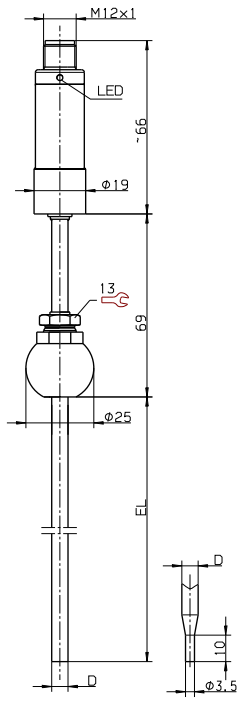

Type 902915/10 with PA 682	Type 902915/10 with PA 684-686 (left) Type 902915/30 with PA 684-686 (right)
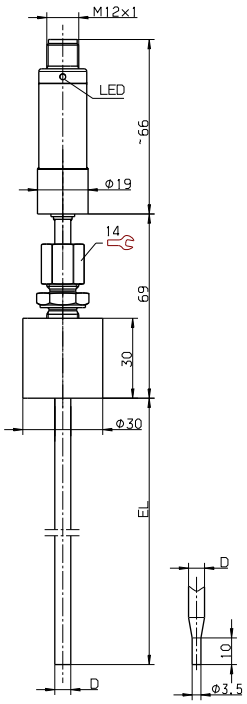	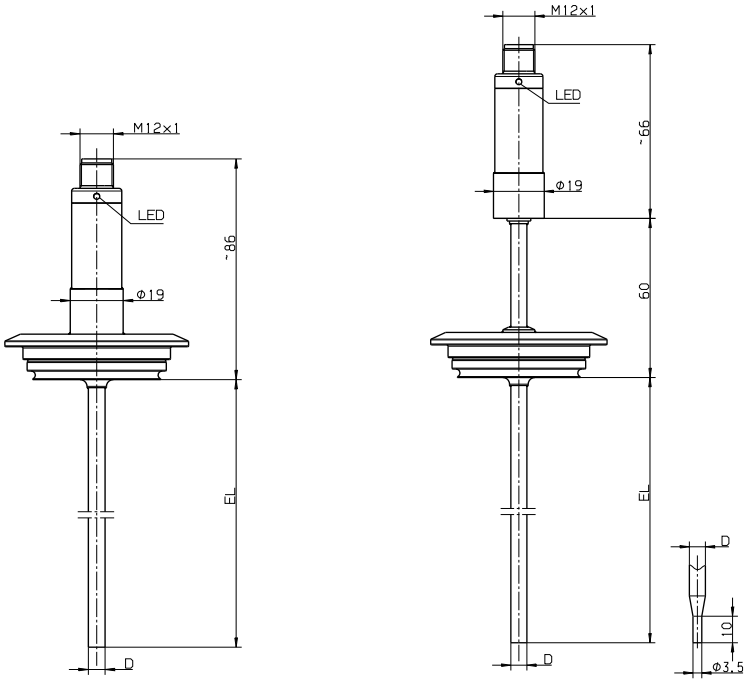

JUMO GmbH & Co. KG
Delivery address: Mackenrodtstraße 14
36039 Fulda, Germany
Postal address: 36035 Fulda, Germany
Phone: +49 661 6003-0
Fax: +49 661 6003-607
Email: mail@jumo.net
Internet: www.jumo.net

JUMO Instrument Co. Ltd.
JUMO House
Temple Bank, Riverway
Harlow, Essex CM 20 2DY, UK
Phone: +44 1279 63 55 33
Fax: +44 1279 62 50 29
Email: sales@jumo.co.uk
Internet: www.jumo.co.uk

JUMO Process Control, Inc.
6733 Myers Road
East Syracuse, NY 13057, USA
Phone: +1 315 437 5866
Fax: +1 315 437 5860
Email: info.us@jumo.net
Internet: www.jumousa.com

Type 902915/10 with PA 755-758 (left) Type 902915/30 with PA 755-758 (right)	Type 902915/30 with PA 997
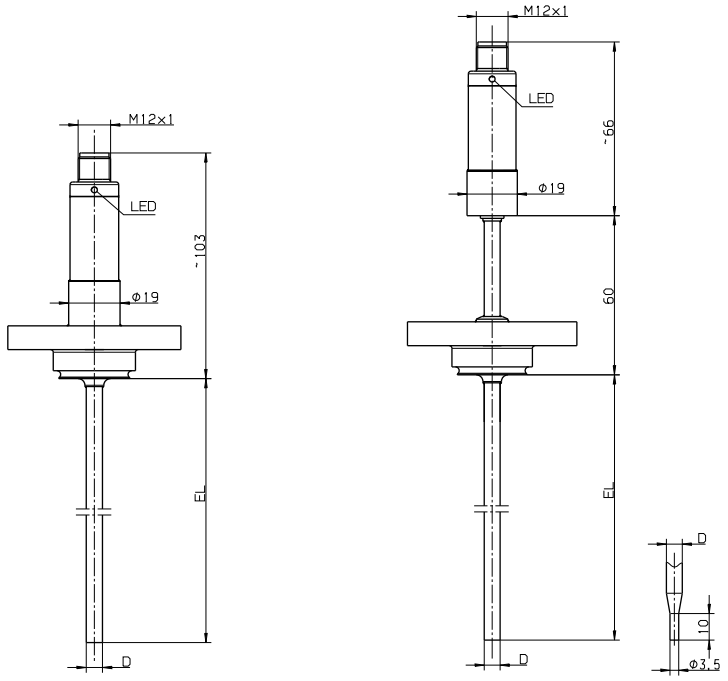	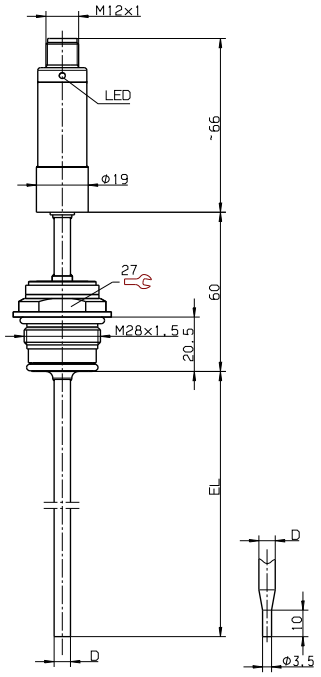

Welding sockets

The following welding sockets are available as accessories:

Welding socket G 1/2 Suitable forPA 380	Welding socket with collar M12 × 1.5 Suitable forPA 379	Welding socket M12 × 1.5 Suitable forPA 379
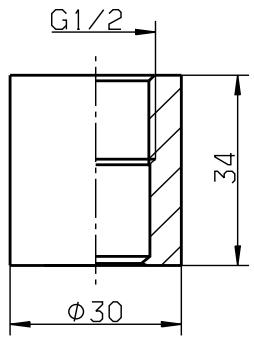	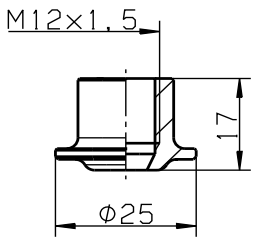	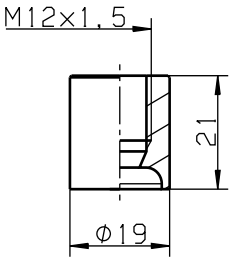

JUMO GmbH & Co. KG
Delivery address: Mackenrodtstraße 14
36039 Fulda, Germany
Postal address: 36035 Fulda, Germany
Phone: +49 661 6003-0
Fax: +49 661 6003-607
Email: mail@jumo.net
Internet: www.jumo.net

JUMO Instrument Co. Ltd.
JUMO House
Temple Bank, Riverway
Harlow, Essex CM 20 2DY, UK
Phone: +44 1279 63 55 33
Fax: +44 1279 62 50 29
Email: sales@jumo.co.uk
Internet: www.jumo.co.uk

JUMO Process Control, Inc.
6733 Myers Road
East Syracuse, NY 13057, USA
Phone: +1 315 437 5866
Fax: +1 315 437 5860
Email: info.us@jumo.net
Internet: www.jumousa.com

Connection diagram

The connection diagram in the data sheet provides preliminary information about the connection options. For the electrical connection, only use the installation instructions or the operating manual. The knowledge and the correct technical compliance with the safety information and warnings contained in these documents are mandatory for mounting, electrical connection, and startup as well as for safety during operation.

Connection	**Terminal assignment**	
	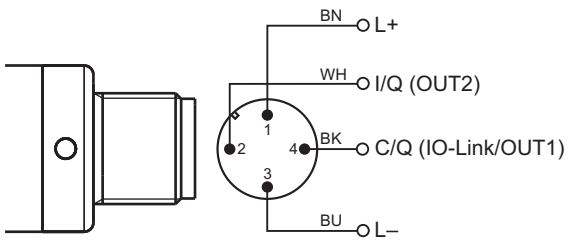	
	Round plug M12 × 1 (A-coded, non-rotating)	
Switch operation		
Voltage supply[a] DC 9.6 to 32 V	1 BN (brown)[b] 3 BU (blue)	L+ L-
Switching output 1	4 BK (black)	C/Q = OUT1
Switching output 2	2 WH (white)	I/Q = OUT2
IO-Link operation		
Voltage supply[a] DC 18 to 32 V	1 BN (brown) 3 BU (blue)	L+ L-
IO-Link	4 BK (black)	C/Q = IO-Link
Switching output 2	2 WH (white)	I/Q = OUT2
Potential equalization		
Functional bonding conductor FB[c]	⏚	

[a] The auxiliary energy of the pressure sensor must meet SELV requirements; optionally, an energy-limited current circuit according to section 9.3 of DIN EN 61010-1 and UL 61010-1 can be used.

[b] The colour coding is only valid for A-coded standard cables!

[c] The temperature sensor must be connected to the potential equalization system of the plant via the process connection.

JUMO GmbH & Co. KG
Delivery address: Mackenrodtstraße 14
36039 Fulda, Germany
Postal address: 36035 Fulda, Germany
Phone: +49 661 6003-0
Fax: +49 661 6003-607
Email: mail@jumo.net
Internet: www.jumo.net

JUMO Instrument Co. Ltd.
JUMO House
Temple Bank, Riverway
Harlow, Essex CM 20 2DY, UK
Phone: +44 1279 63 55 33
Fax: +44 1279 62 50 29
Email: sales@jumo.co.uk
Internet: www.jumo.co.uk

JUMO Process Control, Inc.
6733 Myers Road
East Syracuse, NY 13057, USA
Phone: +1 315 437 5866
Fax: +1 315 437 5860
Email: info.us@jumo.net
Internet: www.jumousa.com

Connection examples

IO-Link operation with 1 switching output	**Switch operation with 2 switching outputs**
p switching (PNP)	p switching (PNP)
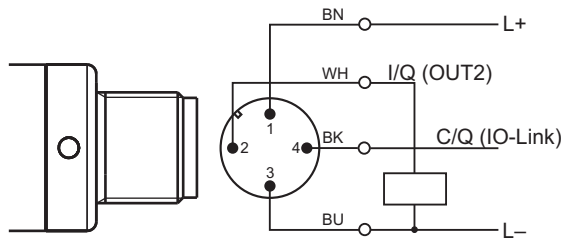	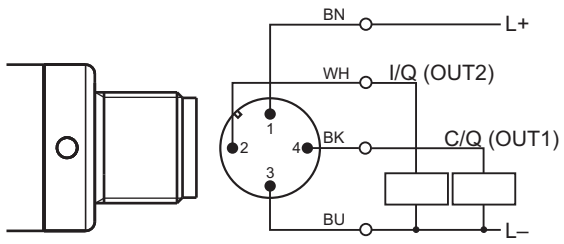
n switching (NPN)	n switching (NPN)
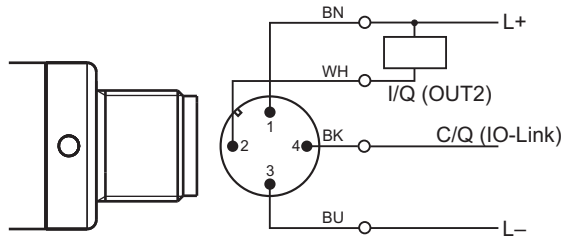	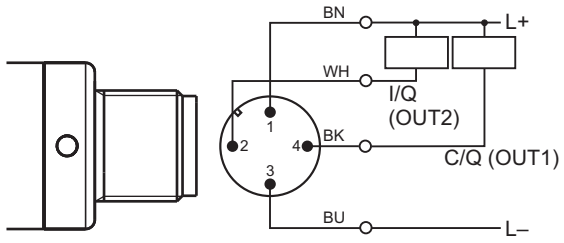

JUMO GmbH & Co. KG
Delivery address: Mackenrodtstraße 14
36039 Fulda, Germany
Postal address: 36035 Fulda, Germany
Phone: +49 661 6003-0
Fax: +49 661 6003-607
Email: mail@jumo.net
Internet: www.jumo.net

JUMO Instrument Co. Ltd.
JUMO House
Temple Bank, Riverway
Harlow, Essex CM 20 2DY, UK
Phone: +44 1279 63 55 33
Fax: +44 1279 62 50 29
Email: sales@jumo.co.uk
Internet: www.jumo.co.uk

JUMO Process Control, Inc.
6733 Myers Road
East Syracuse, NY 13057, USA
Phone: +1 315 437 5866
Fax: +1 315 437 5860
Email: info.us@jumo.net
Internet: www.jumousa.com

Order details

	(1)	**Basic type**
902915		JUMO dTRANS T1000 – Temperature sensor with IO-Link
	(2)	**Basic type extension**
10		IO-Link interface, M12 × 1 connector
30		IO-Link interface, M12 × 1 connector, high-temperature
	(3)	**Operating temperature in °C**
370		-50 to +150 °C
386		-50 to +260 °C
	(4)	**Measuring insert**
1013		1 × Pt1000 in 4-wire circuit
	(5)	**Tolerance class of RTD temperature probe according to DIN EN 60751**
2		Class A
3		Class AA
	(6)	**Protection tube diameter D in mm**
3		3 mm[a]
6		6 mm
	(7)	**Insertion length**
15		15 mm[a]
20		20 mm[a]
25		25 mm[a]
50		50 mm
100		100 mm
150		150 mm
	(8)	**Process connection (PC)**
000		None
103		Screw connection G 3/8
104		Screw connection G 1/2
379		Screw connection M12 x 1.5 with CIP-compliant conical seal
380		Screw connection G 1/2 with CIP-compliant conical seal
550		Aseptic screw connection DN 20 DIN 11864-1 Form A
551		Aseptic screw connection DN 25 DIN 11864-1 Form A
552		Aseptic screw connection DN 32 DIN 11864-1 Form A
553		Aseptic screw connection DN 40 DIN 11864-1 Form A
554		Aseptic screw connection DN 50 DIN 11864-1 Form A
601		Taper socket with union nut DN 10 DIN 11851 (dairy pipe fitting)
604		Taper socket with union nut DN 25 DIN 11851 (dairy pipe fitting)
605		Taper socket with union nut DN 32 DIN 11851 (dairy pipe fitting)
611		Clamping socket (clamp) DN 10/20 DIN 32676
613		Clamping socket (clamp) DN 25/40 DIN 32676
616		Clamping socket (clamp) DN 50 DIN 32676 (2" ISO 2852)
617		Clamping socket (clamp) 2 1/2" similar to DIN 32676
681		Ball welding socket with threaded fitting
682		Welding socket with CIP-compliant conical seal
684		VARIVENT® connection DN 15/10
685		VARIVENT® connection DN 32/25
686		VARIVENT® connection DN 50/40
755		BioControl® D25
756		BioControl® D50
757		BioControl® D65

JUMO GmbH & Co. KG
Delivery address: Mackenrodtstraße 14
36039 Fulda, Germany
Postal address: 36035 Fulda, Germany
Phone: +49 661 6003-0
Fax: +49 661 6003-607
Email: mail@jumo.net
Internet: www.jumo.net

JUMO Instrument Co. Ltd.
JUMO House
Temple Bank, Riverway
Harlow, Essex CM 20 2DY, UK
Phone: +44 1279 63 55 33
Fax: +44 1279 62 50 29
Email: sales@jumo.co.uk
Internet: www.jumo.co.uk

JUMO Process Control, Inc.
6733 Myers Road
East Syracuse, NY 13057, USA
Phone: +1 315 437 5866
Fax: +1 315 437 5860
Email: info.us@jumo.net
Internet: www.jumousa.com

758		BioControl® D80
997		JUMO PEKA hygienic process connection
	(9)	**Protection tube material**
24		Stainless steel 316L (material no. 1.4404/1.4435)
	(10)	**Extra code**
000		None
100		Customer-specific configuration (specifications in plain text)
310		Protection tube offset[b]
374		Inspection certificate 3.1 DIN EN 10204 (material)
452		Wetted, electrolytically polished parts, surface roughness Ra ≤ 0.8 mm
458		Surface roughness R_a ≤ 0.4 µm for clamping socket (clamp) (area touching medium)
774		DAkkS(DKD) calibration (standard, test points 0, 100 and 200 °C)
775		DAkkS(DKD) calibration (service, please state desired test points in plain text)
974		DAkkS(DKD) adjustment with calibration report (standard, test points 0, 100 and 200 °C)
975		DAkkS(DKD) adjustment with calibration report (service, please state desired test points in plain text)

[a] Only with screw connection M12 x 1.5 with CIP-compliant conical seal (process connection 379)
[b] Not for screw connection M12 x 1.5 with CIP-compliant conical seal (process connection 379)

	(1)		(2)		(3)		(4)		(5)		(6)		(7)		(8)		(9)		(10)
Order code		/		-		-		-		-		-		-		-		/	
Order example	902915	/	10	-	370	-	1013	-	2	-	3	-	15	-	379	-	24	/	452

Scope of delivery

Designation
1 temperature sensor in the ordered version
1 installation instructions

Stock versions

Order code	**Part no.**
902915/10-370-1013-2-6-50-104-24/000	00661665
902915/10-370-1013-2-6-100-104-24/000	00676722

Accessories

Designation	Part no.
IO-Link master upon request.	
Device data (IODD) at www.jumo.de or at http://ioddfinder.io-link.com	
Welding socket[a] G 1/2 for process connection 380	00378264
Welding socket with collar[a] M12 × 1.5 for process connection 379	00614228
Welding socket[a] M12 × 1.5 for process connection 379	00655051

[a] Welding sockets made of material 1.4404, parts touching the media electrolytically polished, surface roughness Ra ≤ 0.4 µm

JUMO GmbH & Co. KG
Delivery address: Mackenrodtstraße 14
36039 Fulda, Germany
Postal address: 36035 Fulda, Germany
Phone: +49 661 6003-0
Fax: +49 661 6003-607
Email: mail@jumo.net
Internet: www.jumo.net

JUMO Instrument Co. Ltd.
JUMO House
Temple Bank, Riverway
Harlow, Essex CM 20 2DY, UK
Phone: +44 1279 63 55 33
Fax: +44 1279 62 50 29
Email: sales@jumo.co.uk
Internet: www.jumo.co.uk

JUMO Process Control, Inc.
6733 Myers Road
East Syracuse, NY 13057, USA
Phone: +1 315 437 5866
Fax: +1 315 437 5860
Email: info.us@jumo.net
Internet: www.jumousa.com

JUMO Wtrans E01

Measuring probe for humidity, temperature, and CO_2 with wireless data transmission

- Humidity from 0 to 100 % RH (incl. -40 to +80 °C) or
  CO_2 from 0 to 2000/5000/10000 ppm or
  Temperature from -200 to +600 °C using RTD temperature probe Pt1000
- Two inputs for measured value recording
- Wall-mounted housing with backlit LCD display
- Open air range 300 m
- Wiring expenses are eliminated with modern wireless technology

Basic type 902928
with optional sensors

Brief description

The Wtrans E01 measuring probe is used in combination with a Wtrans receiver for recording measured values using digital sensors for humidity, temperature, and CO_2. The measuring probe has two inputs with plug connectors M12 × 1 to which the sensors can be connected and where the sensors are detected in any combination (plug and play).

Other measurands can be derived from the measured values determined. Up to four measured values are recorded. They are transmitted to the receiver of the Wtrans measuring system at a radio frequency of 868.4 MHz and displayed there. They are available as digital or analog output variables. The voltage is supplied externally (DC 18 to 30 V) or internally by means of four lithium batteries (size AA). The battery operating life with the recommended type of battery is one year (with default settings and one sensor).

The electronics of the measuring probe with backlit LCD display and operating keys are encased in a wall-mounted case (protection type IP65). The ambient temperature range of the measuring probe is -30 to +80 °C, but the differing ambient temperatures of the sensors and lithium batteries must also be considered. The measuring probe can be configured using the USB interface or the operating keys.

Block diagram

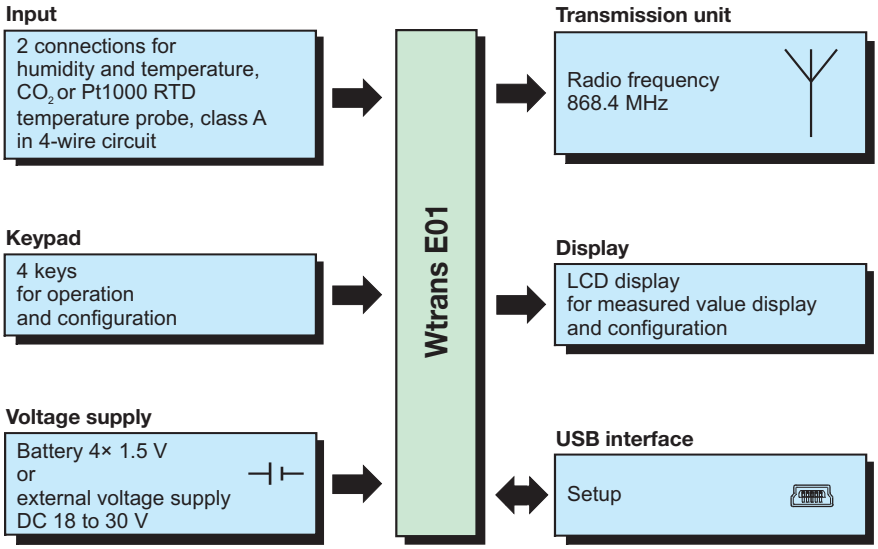

Universal Wtrans receiver

- Max. 16 receiver channels per receiver
- Little wiring work required
  due to modern wireless technology
- Radio frequency 868.4 MHz
- RS 485 interface with Modbus protocol
- 4 analog outputs
  0(4) to 20 mA or 0 to 10 V
  or
  2 analog outputs
  0(4) to 20 mA or 0 to 10 V
  and 2 relay outputs AC 230 V
- For mounting on a 35 × 7.5 mm
  DIN rail acc. to DIN EN 60715

For further information refer to data sheet 902931

JUMO GmbH & Co. KG
Delivery address: Mackenrodtstraße 14
36039 Fulda, Germany
Postal address: 36035 Fulda, Germany
Phone: +49 661 6003-0
Fax: +49 661 6003-607
Email: mail@jumo.net
Internet: www.jumo.net

JUMO Instrument Co. Ltd.
JUMO House
Temple Bank, Riverway
Harlow, Essex CM 20 2DY, UK
Phone: +44 1279 63 55 33
Fax: +44 1279 62 50 29
Email: sales@jumo.co.uk
Internet: www.jumo.co.uk

JUMO Process Control, Inc.
6733 Myers Road
East Syracuse, NY 13057, USA
Phone: +1 315 437 5866
Fax: +1 315 437 5860
Email: info.us@jumo.net
Internet: www.jumousa.com

Technical data – JUMO Wtrans E01

Sensor inputs 1 and 2

Measurand/Description	Measuring range	Measuring accuracy
Humidity and temperature	see Technical data – Sensors	No impact on sensor accuracy
CO_2	see Technical data – Sensors	No impact on sensor accuracy
RTD temperature probe Pt1000 in four-wire circuit (IEC 60751)	-200 to +600 °C	≤ ±0.2 K
Sensor current	≤ 500 µA	
Lead wire resistance	Maximum 11 ohm per wire	
Measuring interval Sensor for humidity and temperature Sensor for CO_2 RTD temperature probe Pt1000	 5 to 3600 s (per default 90 s) 30 to 3600 s (per default 1200 s) 1 to 3600 s (per default 15 s)	

Measuring circuit monitoring

Behavior upon probe break or short circuit Sensor for humidity and temperature Sensor for CO_2 RTD temperature probe Pt1000	 Is recognized as an error and indicated with an error message (Err) on the LCD display Is recognized as an error and indicated with an error message (Err) on the LCD display Is recognized as an error and indicated with an error message (Err) on the LCD display (if plug and play is deactivated, over or under range is indicated)

Output (wireless transmission)

Transmitter detection (transmitter ID)	Five-digit ID, factory set, four digits can be configured according to customer specifications
Transmission interval	1 to 3600 s All measured values are always transmitted together with a default transmission interval of 15 s.
Radio frequency	868.4 MHz (Europe)
Transmission power	< +10 dBm
Open air range	300 m
Output signal	All measured values can be selected. Other measurands can be derived from the values measured. They must be activated on the device (extra code/accessories). Up to four measured values can be displayed and sent to the receiver.
Configuration	Via operating keys or USB interface in combination with the setup program available as an accessory
Configurable parameters	Transmitter detection (max. 4-digit ID), transmission interval, measurands, offset, measuring interval, and LCD display

Display

Technology	Positive, transflective LCD display
Size (W × H)	52 × 30 mm
LCD display	Can be switched on and off
Backlight	Can be switched on and off

JUMO GmbH & Co. KG
Delivery address: Mackenrodtstraße 14
36039 Fulda, Germany
Postal address: 36035 Fulda, Germany
Phone: +49 661 6003-0
Fax: +49 661 6003-607
Email: mail@jumo.net
Internet: www.jumo.net

JUMO Instrument Co. Ltd.
JUMO House
Temple Bank, Riverway
Harlow, Essex CM 20 2DY, UK
Phone: +44 1279 63 55 33
Fax: +44 1279 62 50 29
Email: sales@jumo.co.uk
Internet: www.jumo.co.uk

JUMO Process Control, Inc.
6733 Myers Road
East Syracuse, NY 13057, USA
Phone: +1 315 437 5866
Fax: +1 315 437 5860
Email: info.us@jumo.net
Internet: www.jumousa.com

Electrical data

Voltage supply

Lithium battery	4× 1.5 V (size AA)
Operating life	One year with the default settings and one sensor connected (an additional sensor, fast measuring and transmission interval, or high or low ambient temperatures reduce the batteries' operating life).
Recommended lithium batteries	Energizer Ultimate Lithium AA-L91-FR6-1.5 V This battery is part of the initial Wtrans E01 equipment and is available as an accessory.
Recommended alkaline batteries	Duracell Ultra Power Alkaline AA-MX1500-LR6-1.5 V, not available as an accessory. The information about the operating life of the lithium batteries applies only to the batteries recommended by JUMO.
External voltage supply	DC 18 to 30 V, SELV voltage
Power consumption	2.4 VA
Peak current	250 mA
Requirement	The device must be equipped with an electrical circuit that meets the requirements of EN 61010-1 with regard to "Limited-energy circuits".
Reverse voltage protection	Yes

Environmental influences

Ambient temperature range	With external voltage supply: -30 to +80 °C With batteries: Energizer Ultimate Lithium -20 to +60 °C Duracell Ultra Power Alkaline 0 to 50 °C
Storage temperature range	With external voltage supply: -40 to +85 °C With batteries: Energizer Ultimate Lithium -40 to +60 °C Duracell Ultra Power Alkaline -20 to +35 °C
Temperature influence with the RTD temperature probe Pt1000	≤ ±0.005 % per K deviation from the reference temperature 22 °C (% in relation to the measuring span of -200 to +600 °C)
Resistance to climatic conditions	DIN EN 60721-3-3 Standard climate 3K8H (-30 to +70 °C, 100 % RH) Dripping water 3Z7
Vibration resistance	DIN EN 60068-2-6 Table C.2 (general industrial use) Frequency range: 10 to 55 Hz Amplitude: 0.15 mm Cycles per axis: 10
Electromagnetic compatibility (EMC)	DIN EN 61326-1
Interference emission	Class B - household and small businesses -
Interference immunity	Industrial requirements
Radio frequency spectrum	ETSI EN 300 220-1 and ETSI EN 300 220-2

JUMO GmbH & Co. KG
Delivery address: Mackenrodtstraße 14
36039 Fulda, Germany
Postal address: 36035 Fulda, Germany
Phone: +49 661 6003-0
Fax: +49 661 6003-607
Email: mail@jumo.net
Internet: www.jumo.net

JUMO Instrument Co. Ltd.
JUMO House
Temple Bank, Riverway
Harlow, Essex CM 20 2DY, UK
Phone: +44 1279 63 55 33
Fax: +44 1279 62 50 29
Email: sales@jumo.co.uk
Internet: www.jumo.co.uk

JUMO Process Control, Inc.
6733 Myers Road
East Syracuse, NY 13057, USA
Phone: +1 315 437 5866
Fax: +1 315 437 5860
Email: info.us@jumo.net
Internet: www.jumousa.com

Case

Material	PC-ABS (polycarbonate acrylonitrile butadiene styrene), RAL 9003 signal white
Flammability class	UL94 V-0
Dimensions with lambda/4 antenna, connection for sensor and RTD temperature probe Pt1000 (W × H × D)	133.6 × 210.0 × 60.5 mm
Mounting	Wall mounting using DIN rail piece
Connections for sensors and RTD temperature probe Pt1000	2× plug connector M12 × 1 with internal thread and union nut
Protection type	IP65
Installation position	Vertical ⊥
Weight	Approx. 550 g (incl. 4 batteries)

Technical data – Sensors

Sensors

These sensors are available as accessories. They can be connected directly to the measuring probe. Antenna and extension cables enable indirect mounting.

Sensor for humidity and temperature

Measurand	Measuring range	Measuring accuracy
Relative humidity	0 to 100 % RH (RH = relative humidity)	± 2 % RH (0 to 90 % RH) ± 3 % RH (90 to 100 % RH)
Temperature	-40 to +80 °C	± 0.2 K at 20 °C

More technical data for the sensor for humidity and temperature can be downloaded from the Internet.

Sensor for CO_2

Measurand	Measuring range	Measuring accuracy
CO_2 concentration	0 to 2000 ppm	≤ ± (50 ppm + 2 % of the measuring range)
CO_2 concentration	0 to 5000 ppm	≤ ± (50 ppm + 3 % of the measuring range)
CO_2 concentration	0 to 10000 ppm	≤ ± (100 ppm + 5 % of the measuring range)

More technical data for the sensor for CO_2 can be downloaded from the Internet.

RTD temperature probe Pt1000

Description	Measuring range	Measuring accuracy
RTD temperature probe Pt1000, class A acc. to DIN EN 60751	-50 to +150 °C	±(0.15 K + 0.002 × ltl) ltl = measured temperature in °C without prefix
Connection type	Four-wire circuit	
Response times Protection tube diameter 4.0 mm	Water 0.4 m/s, air 3.0 m/s Water $t_{0.5}$ approx. 3 s, $t_{0.9}$ approx. 7 s, air $t_{0.5}$ approx. 25 s, $t_{0.9}$ approx. 80 s	
Ambient temperature range	-50 to +150 °C	
Storage temperature range	-50 to +150 °C	
Case material	Stainless steel	
Connection	Plug connector M12 × 1 with external thread	
Protection type	IP65 with connected mating connector	
Installation position	Any	
Weight	Approx. 10 g	

Other connectable RTD temperature probes Pt1000 can be found in the Accessories section and the data sheets 902150 and 902815.

JUMO GmbH & Co. KG
Delivery address: Mackenrodtstraße 14
36039 Fulda, Germany
Postal address: 36035 Fulda, Germany
Phone: +49 661 6003-0
Fax: +49 661 6003-607
Email: mail@jumo.net
Internet: www.jumo.net

JUMO Instrument Co. Ltd.
JUMO House
Temple Bank, Riverway
Harlow, Essex CM 20 2DY, UK
Phone: +44 1279 63 55 33
Fax: +44 1279 62 50 29
Email: sales@jumo.co.uk
Internet: www.jumo.co.uk

JUMO Process Control, Inc.
6733 Myers Road
East Syracuse, NY 13057, USA
Phone: +1 315 437 5866
Fax: +1 315 437 5860
Email: info.us@jumo.net
Internet: www.jumousa.com

Dimensions

Measuring probe

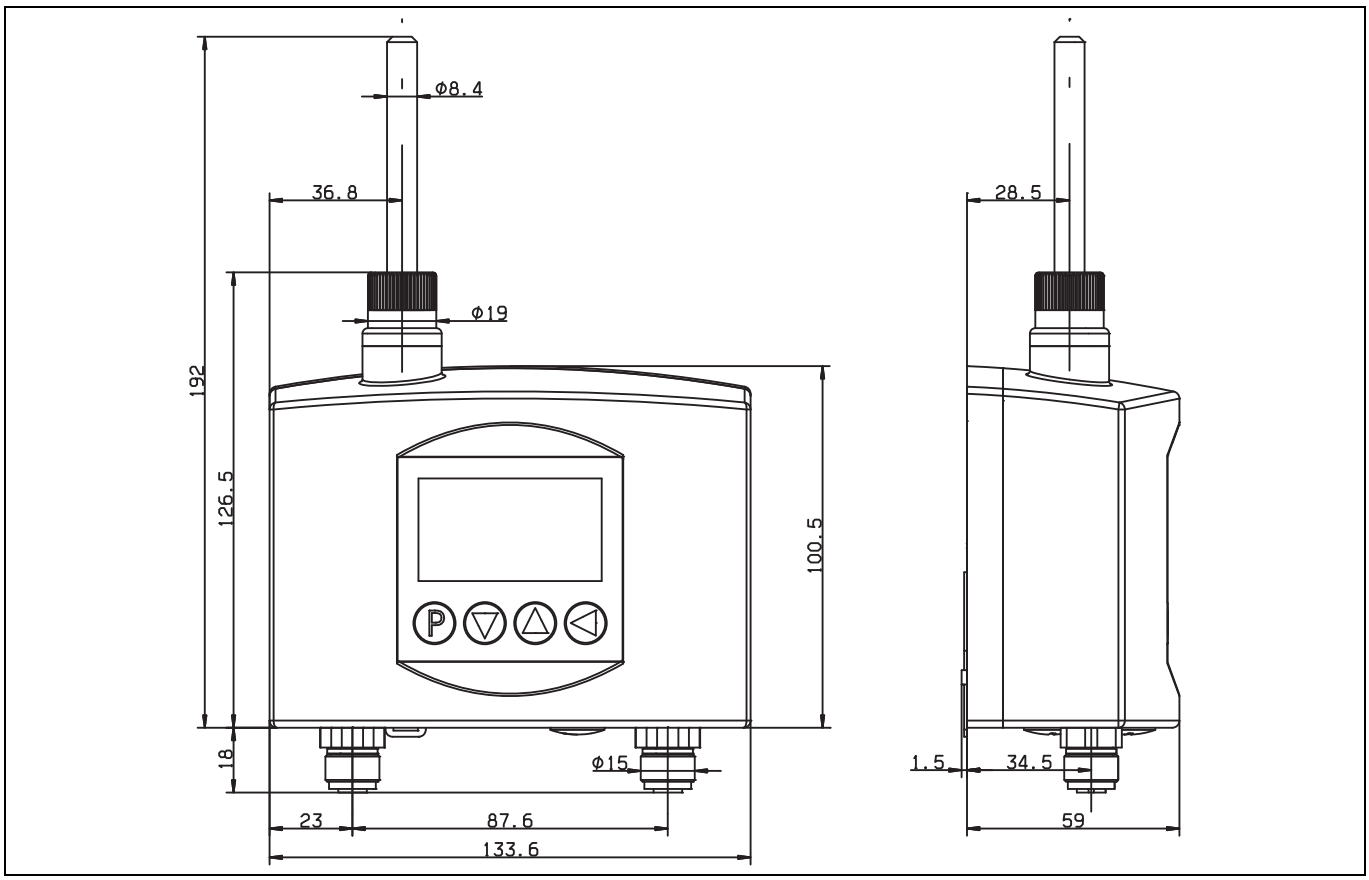

Sensors and lambda/4 antenna

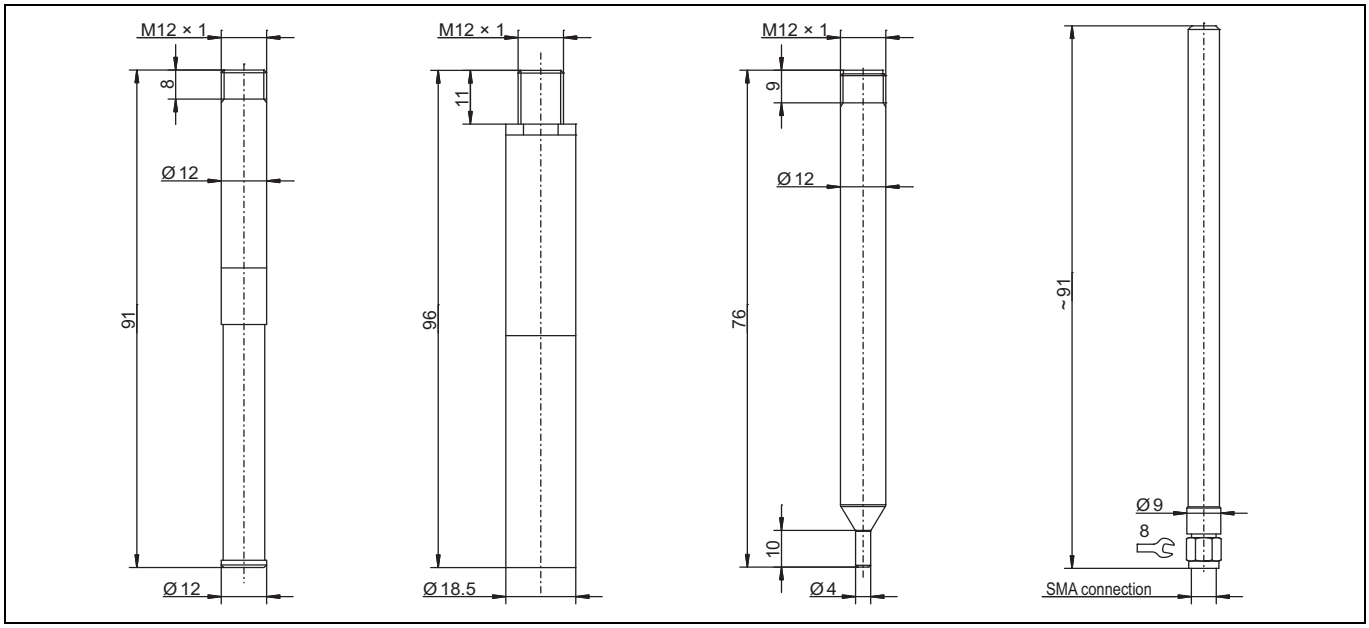

Sensor for humidity and temperature, and CO_2, RTD temperature probe Pt1000, and lambda/4 antenna (from left to right)

JUMO GmbH & Co. KG
Delivery address: Mackenrodtstraße 14
36039 Fulda, Germany
Postal address: 36035 Fulda, Germany
Phone: +49 661 6003-0
Fax: +49 661 6003-607
Email: mail@jumo.net
Internet: www.jumo.net

JUMO Instrument Co. Ltd.
JUMO House
Temple Bank, Riverway
Harlow, Essex CM 20 2DY, UK
Phone: +44 1279 63 55 33
Fax: +44 1279 62 50 29
Email: sales@jumo.co.uk
Internet: www.jumo.co.uk

JUMO Process Control, Inc.
6733 Myers Road
East Syracuse, NY 13057, USA
Phone: +1 315 437 5866
Fax: +1 315 437 5860
Email: info.us@jumo.net
Internet: www.jumousa.com

Display and control elements

Operation and configuration of the measuring probe require four operating keys located at the front. These have various functions depending on the menu. The dialog is supported by an LCD display. The operation and configuration of the parameters are organized into three different levels:

- Normal display (display of measured value, measured value no., and measurand)
- Parameter level (editing of configuration parameters)
- Startup level (display of measured value, measured value no., and measurand)

The startup level differs from the normal display in that it uses a temporary fast measuring and transmission interval.

A code can be used to protect the parameter level from unauthorized access.

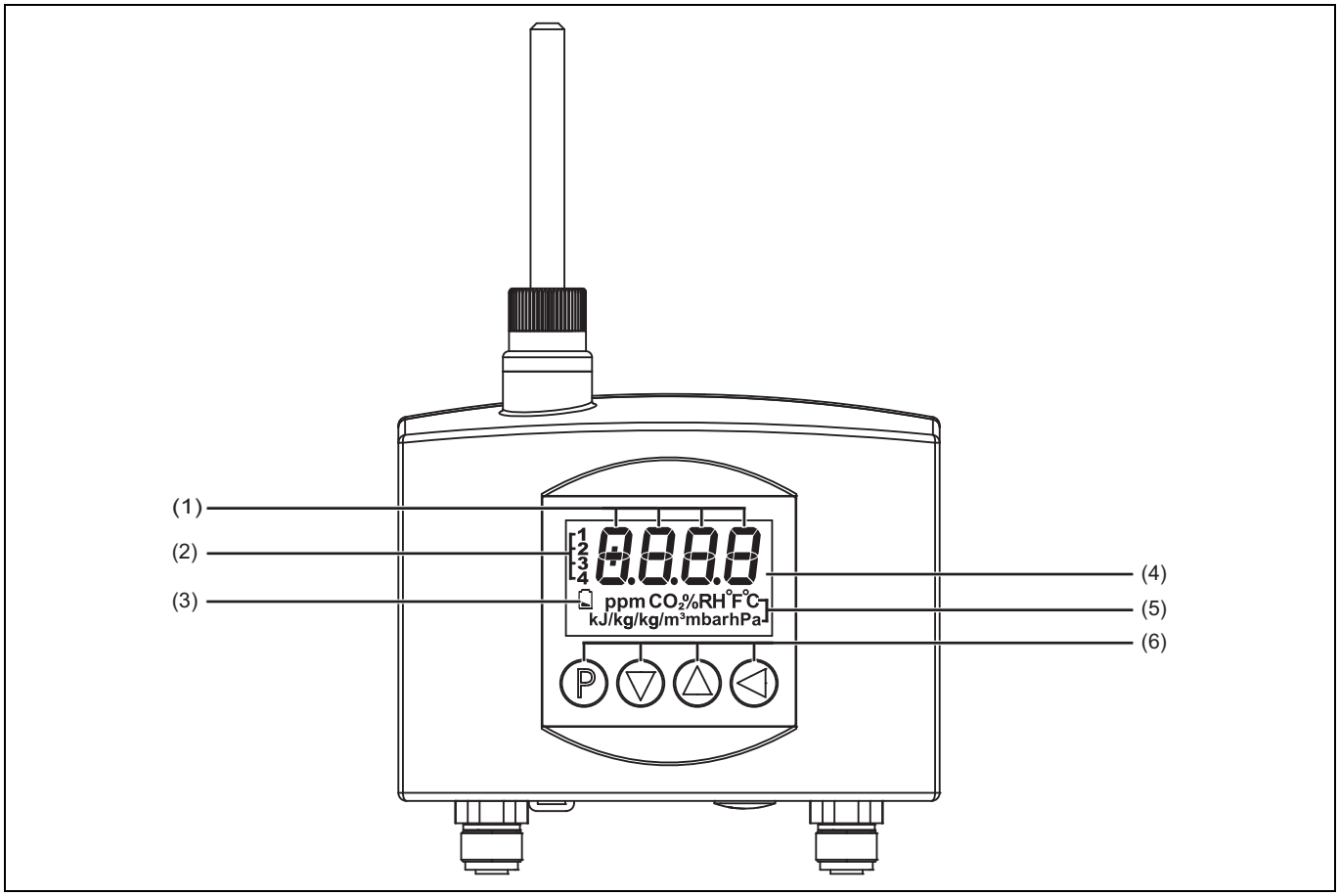

(1) Measured value

(2) Measured value no. (1, 2, 3, and 4)

(3) Battery symbol (battery low/battery empty)

(4) LCD display,
15 mm-high 4-digit segment display and 4 mm-high symbols for measurands with white backlight

(5) Measurands (ppm CO_2, %RH, °F, °C, kJ/kg, g/kg, g/m^3, mbar, and hPa)

(6) Operating keys (P key, down key, up key, and left key)

JUMO GmbH & Co. KG
Delivery address: Mackenrodtstraße 14
36039 Fulda, Germany
Postal address: 36035 Fulda, Germany
Phone: +49 661 6003-0
Fax: +49 661 6003-607
Email: mail@jumo.net
Internet: www.jumo.net

JUMO Instrument Co. Ltd.
JUMO House
Temple Bank, Riverway
Harlow, Essex CM 20 2DY, UK
Phone: +44 1279 63 55 33
Fax: +44 1279 62 50 29
Email: sales@jumo.co.uk
Internet: www.jumo.co.uk

JUMO Process Control, Inc.
6733 Myers Road
East Syracuse, NY 13057, USA
Phone: +1 315 437 5866
Fax: +1 315 437 5860
Email: info.us@jumo.net
Internet: www.jumousa.com

Connection elements

View from below

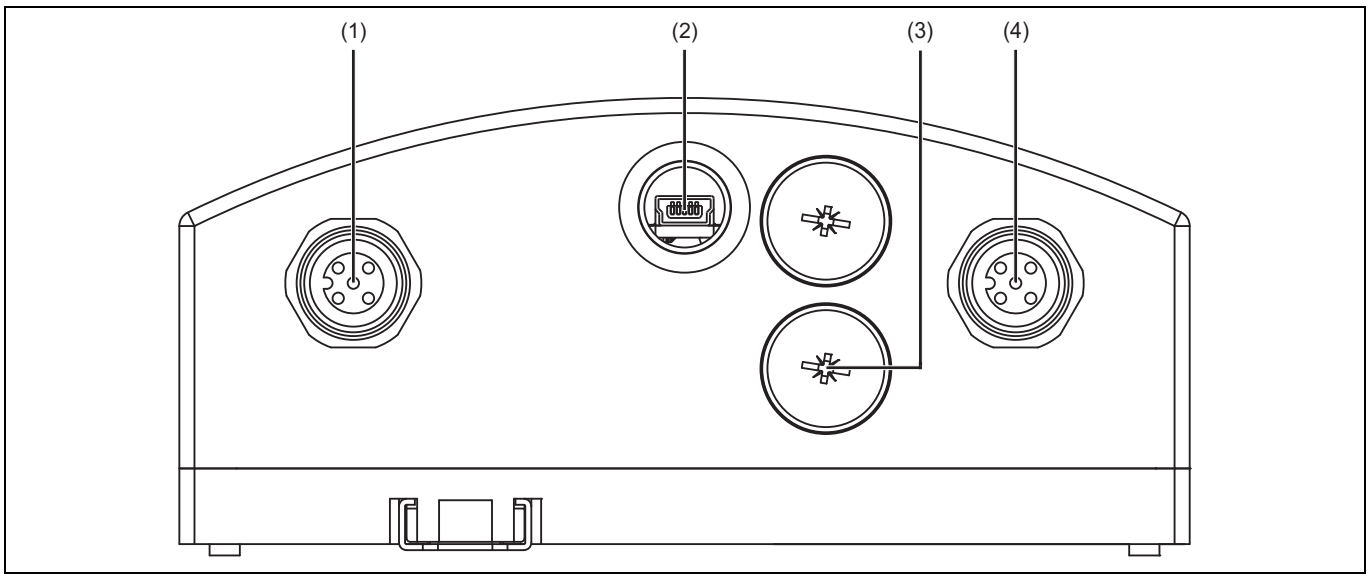

(1) Connection for sensor 1: sensor for humidity and temperature, sensor for CO_2, or RTD temperature probe Pt1000

(2) Connection for USB connector (Mini-B): if the interface is not needed or after a configuration, the opening on the device must be sealed using the sealing screw M12 × 1.5 supplied (accessories set) with the help of the mounting key (accessories set).

(3) Connection for external voltage supply: if the voltage is supplied externally, the cable fitting supplied (accessories set) must be used instead of the M12 x 1.5 sealing screw. Install the cable fitting instead of the sealing screw labeled with (3).

(4) Connection for sensor 2: sensor for humidity and temperature, sensor for CO_2, or RTD temperature probe Pt1000

View from above

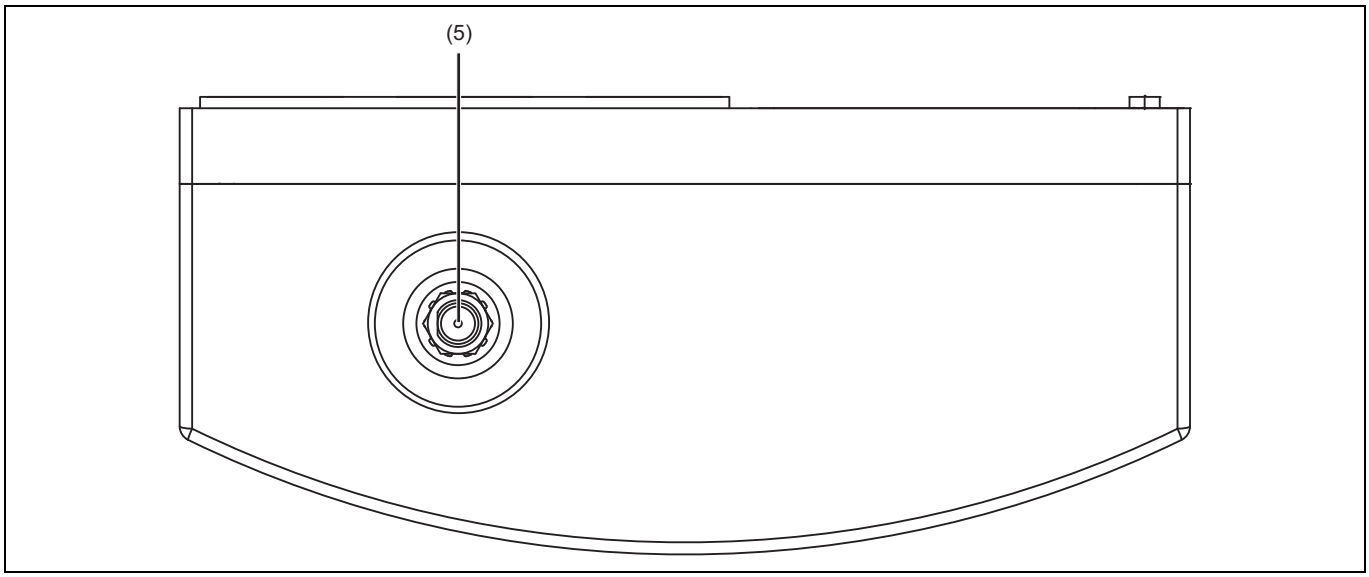

(5) Connection for lambda/4 antenna, or optionally lambda/4 antenna with antenna cable and antenna holder for wall mounting

JUMO GmbH & Co. KG
Delivery address: Mackenrodtstraße 14
36039 Fulda, Germany
Postal address: 36035 Fulda, Germany
Phone: +49 661 6003-0
Fax: +49 661 6003-607
Email: mail@jumo.net
Internet: www.jumo.net

JUMO Instrument Co. Ltd.
JUMO House
Temple Bank, Riverway
Harlow, Essex CM 20 2DY, UK
Phone: +44 1279 63 55 33
Fax: +44 1279 62 50 29
Email: sales@jumo.co.uk
Internet: www.jumo.co.uk

JUMO Process Control, Inc.
6733 Myers Road
East Syracuse, NY 13057, USA
Phone: +1 315 437 5866
Fax: +1 315 437 5860
Email: info.us@jumo.net
Internet: www.jumousa.com

Rear view

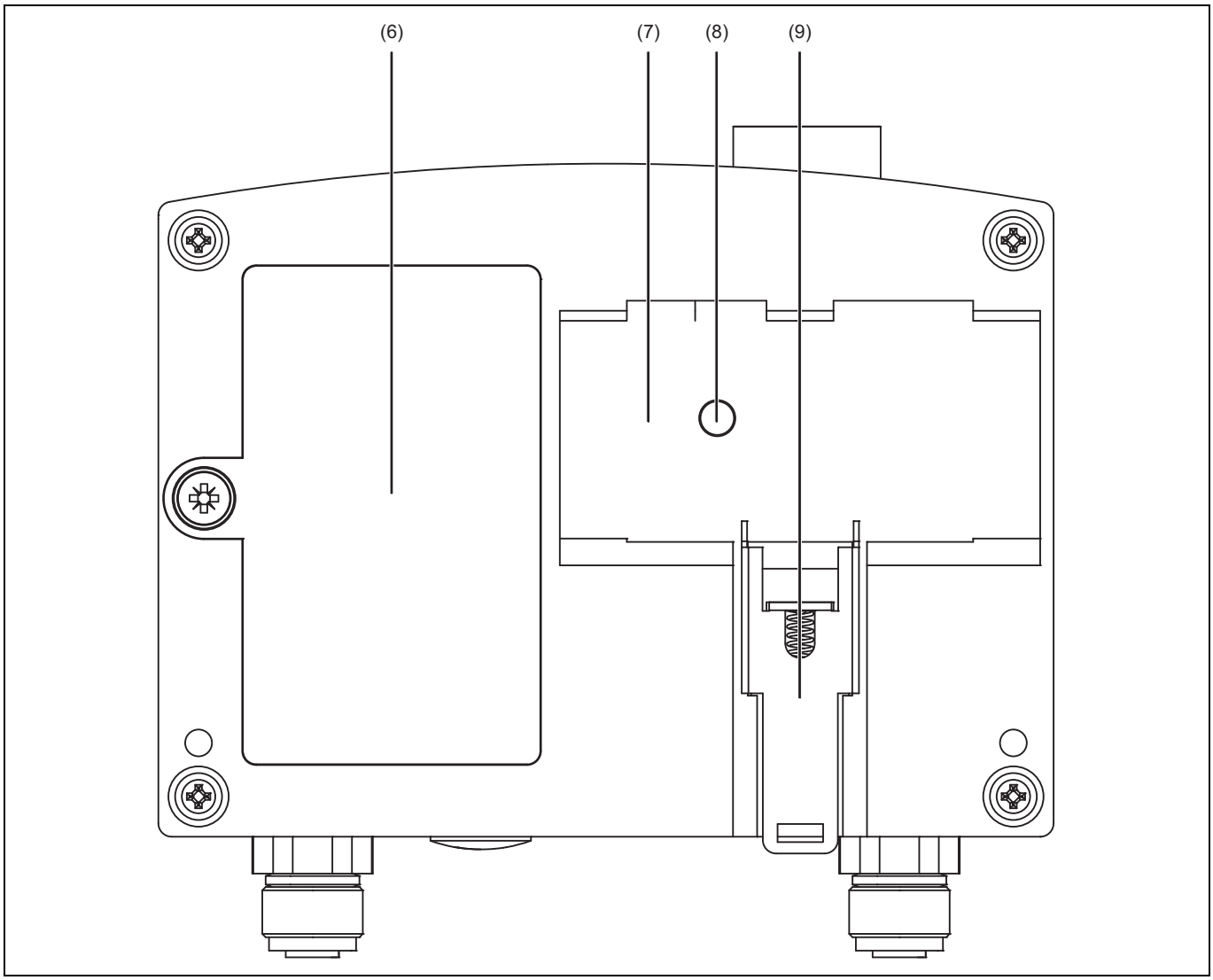

(6) Battery compartment for inserting batteries and connecting to external voltage supply

(7) Recess for DIN rail for mounting the case

(8) Pressure compensation element (do not tape)

(9) Unlocking to release the device from the DIN rail

JUMO GmbH & Co. KG
Delivery address: Mackenrodtstraße 14
36039 Fulda, Germany
Postal address: 36035 Fulda, Germany
Phone: +49 661 6003-0
Fax: +49 661 6003-607
Email: mail@jumo.net
Internet: www.jumo.net

JUMO Instrument Co. Ltd.
JUMO House
Temple Bank, Riverway
Harlow, Essex CM 20 2DY, UK
Phone: +44 1279 63 55 33
Fax: +44 1279 62 50 29
Email: sales@jumo.co.uk
Internet: www.jumo.co.uk

JUMO Process Control, Inc.
6733 Myers Road
East Syracuse, NY 13057, USA
Phone: +1 315 437 5866
Fax: +1 315 437 5860
Email: info.us@jumo.net
Internet: www.jumousa.com

Connection diagram

The connection diagram in the data sheet provides preliminary information about the connection options. For the electrical connection only use the installation instructions or the operating manual. The knowledge and the correct technical execution of the safety information/instructions contained in these documents are mandatory for installation, electrical connection, startup, and for safety during operation.

Voltage supply

Connection	Connection element	Comment
4× 1.5 V lithium or alkaline batteries (size AA)	6	Connection in the battery compartment by inserting batteries

or

Connection	Connection element	Comment
DC 18 to 30 V, SELV voltage	3 and 6	Connection in the battery compartment using spring-cage terminal (Drawing out of the connecting cable via the cable gland on the underside of the case)

Input

Connection	Connection element	Symbol
Sensor for humidity and temperature	1 or 4	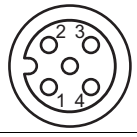
Sensor for CO_2	1 or 4	
RTD temperature probe Pt1000 in four-wire circuit	1 or 4	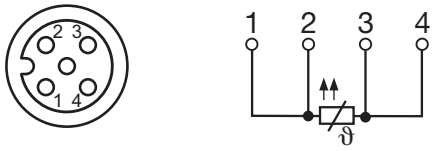

Output

Connection	Connection element	Symbol
Lambda/4 antenna	5	

Interface

Connection	Connection element	Symbol
USB interface (Mini-B)	2	

JUMO GmbH & Co. KG
Delivery address: Mackenrodtstraße 14
36039 Fulda, Germany
Postal address: 36035 Fulda, Germany
Phone: +49 661 6003-0
Fax: +49 661 6003-607
Email: mail@jumo.net
Internet: www.jumo.net

JUMO Instrument Co. Ltd.
JUMO House
Temple Bank, Riverway
Harlow, Essex CM 20 2DY, UK
Phone: +44 1279 63 55 33
Fax: +44 1279 62 50 29
Email: sales@jumo.co.uk
Internet: www.jumo.co.uk

JUMO Process Control, Inc.
6733 Myers Road
East Syracuse, NY 13057, USA
Phone: +1 315 437 5866
Fax: +1 315 437 5860
Email: info.us@jumo.net
Internet: www.jumousa.com

Setup program

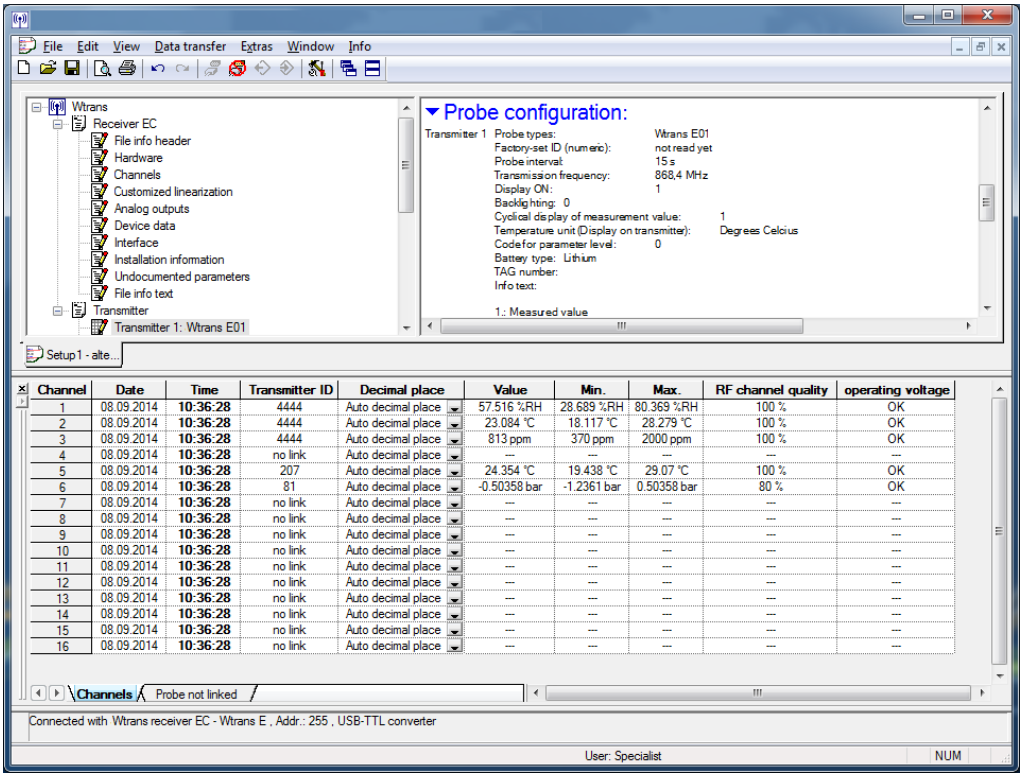

The setup program enables the measuring probe to be configured using a laptop/PC. The configuration data can be archived and printed.

Configurable parameters	Default settings
Transmitter detection (transmitter ID)	Transmitter detection (transmitter ID), consecutive
Transmission interval	All measured values are always transmitted together with a default transmission interval of 15 s. Each sensor type has its own measuring interval. • Sensor for humidity and temperature: 5 to 3600 s (per default 90 s) • Sensor for CO_2: 30 to 3600 s (per default 1200 s) • RTD temperature probe Pt1000: 1 to 3600 s (per default 15 s)
1st and 2nd measured value	Automatic sensor detection
3rd and 4th measured value	Without measured value

The setup program can be used to overwrite changed parameters with the default settings at any time. The connection between measuring probe and laptop/PC is established via a USB interface (Mini-B).

The setup program also enables other parameters to be configured, such as LCD display (switch-off, automatic measured value forwarding, back-light permanently on). Each of the four measured values can be configured (sensor selection, measurand selection, offset, measuring interval, measured value permanently on, etc.)

Interface

Connection for	Type	Terminal assignment	
USB connection to laptop/PC	USB interface (Mini-B)	Standard (5-pin)	

The USB interface is designed only to configure the measuring probe. Continuous operation is not admissible.

JUMO GmbH & Co. KG
Delivery address: Mackenrodtstraße 14
36039 Fulda, Germany
Postal address: 36035 Fulda, Germany
Phone: +49 661 6003-0
Fax: +49 661 6003-607
Email: mail@jumo.net
Internet: www.jumo.net

JUMO Instrument Co. Ltd.
JUMO House
Temple Bank, Riverway
Harlow, Essex CM 20 2DY, UK
Phone: +44 1279 63 55 33
Fax: +44 1279 62 50 29
Email: sales@jumo.co.uk
Internet: www.jumo.co.uk

JUMO Process Control, Inc.
6733 Myers Road
East Syracuse, NY 13057, USA
Phone: +1 315 437 5866
Fax: +1 315 437 5860
Email: info.us@jumo.net
Internet: www.jumousa.com

Order details

	(1)	**Basic type**
902928/10		Wtrans E01 Measuring probe for humidity, temperature, and CO_2 with wireless data transmission
	(2)	**Version**
8		Standard with default settings
9		Customer-specific configuration (specification in plain text)[a]
	(3)	**Parameters**
10		Humidity, temperature, and CO_2 (standard)
20		Activation of other parameters (absolute humidity (a), enthalphy (h), wet-bulb temperature (Tw), mixing ratio (x), dew point temperature (Td), and steam pressure (pw))
	(4)	**Extra code**
000		Without

[a] The customer-specific configuration only applies to the transmission interval (depends on the sensor connected and RTD temperature probe Pt1000) and offset. Sensor for humidity and temperature (5 to 3600 s, per default 90 s), sensor for CO_2 (30 to 3600 s, per default 1200 s), RTD temperature probe Pt1000 (1 to 3600 s, per default 15 s), offset (-99.9 to +99.9, per default 0). Transmission interval and offset can also be set using the setup program (see accessories).

	(1)		(2)		(3)		(4)
Order code		-		-		/	
Order example	902928/10	-	8	-	10	/	000

Scope of delivery

1 device in the ordered version (sensors for humidity, temperature and CO_2 must be ordered separately, see accessories)
1 lambda/4 antenna, impedance 50 ohm, 868.4 MHz, $T_{max.}$ 125 °C
4× 1.5 V lithium batteries (size AA) in blister packaging
1 battery case for 4× 1.5 V batteries (size AA)
1 spring-cage terminal for DC 18 to 30 V external voltage supply, SELV voltage
2 accessories sets
1 operating manual

Accessories

Description	**Part no.**
Setup program on CD-ROM, multilingual[a]	00488887
Setup program incl. OnlineChart on CD-ROM, multilingual[a]	00549067
OnlineChart activation	00549188
USB cable, type A USB connector on Mini-B USB connector, length 3 m[a]	00506252
Lambda/4 antenna, impedance 50 ohm, 868.4 MHz, $T_{max.}$ 125 °C	00503151
Antenna holder for wall mounting with antipole for lambda/4 antenna	00482648
Antenna cable with preconfigured screw-type connection, length 3 m, $T_{max.}$ 85 °C	00601189
Antenna cable with preconfigured screw-type connection, length 5 m, $T_{max.}$ 85 °C	00601190
Antenna cable with preconfigured screw-type connection, length 10 m, $T_{max.}$ 125 °C	00669026
4× 1.5 V lithium batteries (size AA) in blister packaging	00617446
1 battery case for 4× 1.5 V batteries (battery size AA)	00606043
Spring-cage terminal for DC 18 to 30 V external voltage supply, SELV voltage	00598340
Plug-in power supply unit Voltage supply: AC 100 to 240 V, 50 to 60 Hz Output: DC 24 V, 0.5 A Ambient temperature range: -20 to +50 °C	00619184

JUMO GmbH & Co. KG
Delivery address: Mackenrodtstraße 14
36039 Fulda, Germany
Postal address: 36035 Fulda, Germany
Phone: +49 661 6003-0
Fax: +49 661 6003-607
Email: mail@jumo.net
Internet: www.jumo.net

JUMO Instrument Co. Ltd.
JUMO House
Temple Bank, Riverway
Harlow, Essex CM 20 2DY, UK
Phone: +44 1279 63 55 33
Fax: +44 1279 62 50 29
Email: sales@jumo.co.uk
Internet: www.jumo.co.uk

JUMO Process Control, Inc.
6733 Myers Road
East Syracuse, NY 13057, USA
Phone: +1 315 437 5866
Fax: +1 315 437 5860
Email: info.us@jumo.net
Internet: www.jumousa.com

Description	Part no.
Sensor for humidity and temperature, measuring range 0 to 100 % RH and -40 to +80 °C For connecting directly Protection tube diameter 12 mm, length 91 mm	00614528
Sensor for CO_2, measuring range 0 to 2000 ppm For connecting directly Protection tube diameter 18.5 mm, length 96 mm	00614530
Sensor for CO_2, measuring range 0 to 5000 ppm For connecting directly Protection tube diameter 18.5 mm, length 96 mm	00614531
Sensor for CO_2, measuring range 0 to 10,000 ppm For connecting directly Protection tube diameter 18.5 mm, length 96 mm	00614532
RTD temperature probe with Pt1000 temperature sensor and machine connector M12 × 1 For connecting directly Protection tube diameter 12 mm, reduced to 4 mm, length 76 mm	00606033
Push-in RTD temperature probe with Pt1000 temperature sensor and machine connector M12 × 1 902150/99-386-1013-2-6-100-56-2500/315 Protection tube diameter 6 mm, insertion length 100 mm, connecting cable length 2500 mm	00551310
Push-in RTD temperature probe with Pt1000 temperature sensor and machine connector M12 × 1 902150/99-386-1013-2-6-200-56-2500/315 Protection tube diameter 6 mm, insertion length 200 mm, connecting cable length 2500 mm	00551311
Screw-in RTD temperature probe without transmitter with Pt1000 temperature sensor and machine connector M12 × 1 902815/10-380-1013-2-6-100-000-24/000 Protection tube diameter 6 mm, insertion length 100 mm	00511233
Compression fitting G 1/2 (stainless steel) for protection tube diameter 6 mm	00305445
Compression fitting G 1/2 (stainless steel) for protection tube diameter 12 mm	00312448
Compression fitting M20 × 1.5 (stainless steel) for protection tube diameter 12 mm	00558447
Cable fitting M20 × 1.5 (nickel-plated brass)	00575665
Holder for wall mounting for RTD temperature probe Pt1000 with plug connection M12 × 1	00503329
Holder for wall mounting for RTD temperature probe Pt1000 with protection tube diameter 6 mm	00503328
PUR [b]extension cable (shielded) with machine connector M12 × 1, length 2000 mm	00503577
PUR[b] extension cable (shielded) with M12 × 1 machine connector, length 5000 mm	00503578
PUR[b] extension cable (shielded) with M12 × 1 machine connector, length 10,000 mm	00503579
Note: for compression fittings and flanges refer to data sheet 909750	

[a] Configuration using a laptop/PC is only possible with the USB cable and one of the two setup programs.

[b] Polyurethane

JUMO GmbH & Co. KG
Delivery address: Mackenrodtstraße 14
36039 Fulda, Germany
Postal address: 36035 Fulda, Germany
Phone: +49 661 6003-0
Fax: +49 661 6003-607
Email: mail@jumo.net
Internet: www.jumo.net

JUMO Instrument Co. Ltd.
JUMO House
Temple Bank, Riverway
Harlow, Essex CM 20 2DY, UK
Phone: +44 1279 63 55 33
Fax: +44 1279 62 50 29
Email: sales@jumo.co.uk
Internet: www.jumo.co.uk

JUMO Process Control, Inc.
6733 Myers Road
East Syracuse, NY 13057, USA
Phone: +1 315 437 5866
Fax: +1 315 437 5860
Email: info.us@jumo.net
Internet: www.jumousa.com

JUMO Wtrans series

Type	Description	Data sheet
JUMO Wtrans receiver	Universal receiver for JUMO wireless measuring probes (Voltage supply AC 110 to 240 V or AC/DC 20 to 30 V)	902931
JUMO Wtrans T	Transmitter RTD temperature probe with wireless data transmission (for universal receivers as of software version 01.01) • as insertion or mineral-insulated RTD temperature probe • for various ambient and operating temperatures • with fixed and flexible protection tubes • with plug connector M12 × 1 for RTD temperature probes • with plug connector M12 × 1 for RTD temperature probes with connecting cable • with ATEX approval	902930
JUMO Wtrans E01	Transmitter Measuring probe for humidity, temperature, and CO_2 with wireless data transmission (for universal receivers as of software version 05.01)	902928
JUMO Wtrans B	Transmitter Programmable head transmitter with wireless data transmission (for universal receivers as of software version 03.01)	707060
JUMO Wtrans p	Transmitter Pressure transmitter with wireless data transmission (for universal receivers as of software version 04.01)	402060

Stock version

Order code	Part no.
902928/10-8-10/000	00618852

JUMO GmbH & Co. KG
Delivery address: Mackenrodtstraße 14
36039 Fulda, Germany
Postal address: 36035 Fulda, Germany
Phone: +49 661 6003-0
Fax: +49 661 6003-607
Email: mail@jumo.net
Internet: www.jumo.net

JUMO Instrument Co. Ltd.
JUMO House
Temple Bank, Riverway
Harlow, Essex CM 20 2DY, UK
Phone: +44 1279 63 55 33
Fax: +44 1279 62 50 29
Email: sales@jumo.co.uk
Internet: www.jumo.co.uk

JUMO Process Control, Inc.
6733 Myers Road
East Syracuse, NY 13057, USA
Phone: +1 315 437 5866
Fax: +1 315 437 5860
Email: info.us@jumo.net
Internet: www.jumousa.com

JUMO Wtrans T
RTD Temperature Probe with Wireless Data Transmission

Basic type 902930/10

- **For operating temperatures from -30 to +260 °C or -200 to +600 °C**
- **For mobile or stationary temperature measurement**
- **Open air range 300 m with interference-resistant transmission**
- **Wiring work is eliminated with modern wireless technology**
- **Approval according to ATEX directive 2014/34/EU**

The Wtrans T is used in connection with a Wtrans receiver for stationary or mobile recording of temperatures within the operating range of -30 to +260 °C or -200 to +600 °C. This measured temperature value is transmitted wirelessly to the receiver of the Wtrans measuring system; here it is displayed and available digitally at the RS485 interface as well as an analog output. One receiver variant can signal various alarms at two relay outputs.
The transmission electronics of the RTD temperature probe are placed in the housing so that they are vibration-resistant; the housing is oil-resistant and acid-proof. The ambient temperature of the housing may either be from -30 to +85 °C or -25 to +125 °C. The protection type is IP67. A durable lithium battery with 3.6 V is used for voltage supply.
The radio frequencies of the Wtrans measuring system (868.4 MHz or 915 MHz) are largely impervious to external interferences and allow transmission even in a rough industrial environment. When using the antenna holder for wall mounting with the 3 m antenna cable for the receiver, the open air range is 300 m.
The stainless steel protection tube with the Pt1000 temperature sensor according to DIN EN 60751, class A in a 3-wire circuit is available with a flat, oblique, or centered probe tip. The insertion length is from 30 to 10000 mm. Variants with an extension tube or an M12 × 1 plug connection to connect Pt1000 RTD temperature probes are also available.
The Wtrans T is also available as a version with ATEX approval (basic types 902930/15, .../17, .../55). These devices can be installed directly in potentially explosive areas up to zone 0. The receiver is installed outside the Ex zone. The radio data transmission from the Ex-area avoids costly installations with cables and protection barriers or supply isolators.
The design type of the JUMO RTD temperature probes must be agreed when placing the order. The Ex variant with M12 connector is always delivered with an approved JUMO RTD temperature probe with PTFE connecting cable. Devices with process connections can be ordered in versions with Ex zone separation.
A setup program is available as an accessory for easy configuration and parameterization of the Wtrans measuring system on the PC. The OnlineChart function can be used optionally to record the measured values on the PC.

Block diagram

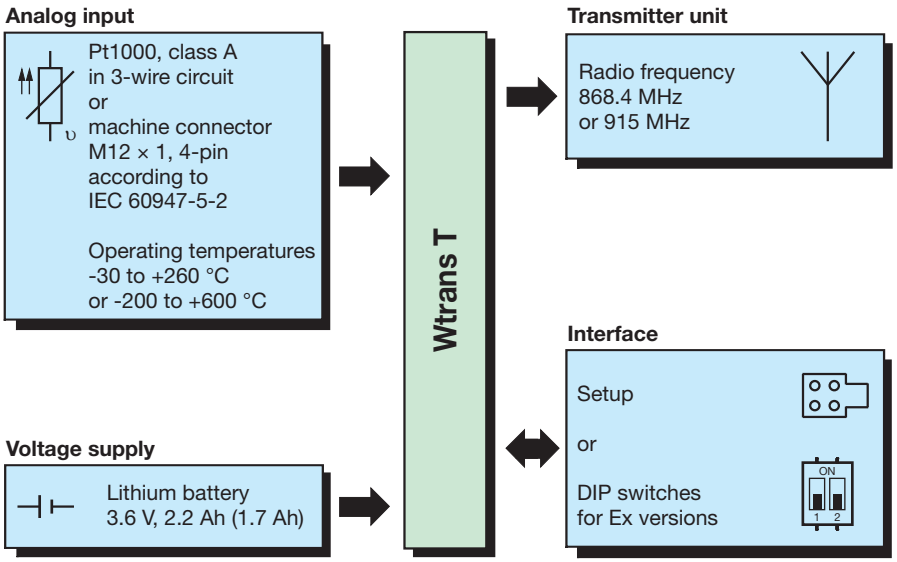

Suitable Wtrans receivers

- Max. 16 Wtrans transmitters per Wtrans receiver
- Little wiring work required due to modern wireless technology
- Radio frequency 868.4 MHz or 915 MHz; in the 915 MHz frequency band, ten frequencies can be configured
- RS485 interface with Modbus protocol
- Four analog outputs
  0(4) to 20 mA / 0 to 10 V
  or
  Two analog outputs
  (0)4 to 20 mA / 0 to 10 V
  and two relay outputs AC 230 V
- For fitting on a DIN-rail
  35 × 7.5 mm
  according to DIN EN 60715

For further information refer to data sheet 902931

Approvals / approval marks (see "Technical data")

JUMO GmbH & Co. KG
Delivery address: Mackenrodtstraße 14
36039 Fulda, Germany
Postal address: 36035 Fulda, Germany
Phone: +49 661 6003-0
Fax: +49 661 6003-607
Email: mail@jumo.net
Internet: www.jumo.net

JUMO Instrument Co. Ltd.
JUMO House
Temple Bank, Riverway
Harlow, Essex CM 20 2DY, UK
Phone: +44 1279 63 55 33
Fax: +44 1279 62 50 29
Email: sales@jumo.co.uk
Internet: www.jumo.co.uk

JUMO Process Control, Inc.
6733 Myers Road
East Syracuse, NY 13057, USA
Phone: +1 315 437 5866
Fax: +1 315 437 5860
Email: info.us@jumo.net
Internet: www.jumousa.com

Technical data

Basic type 902930/10, 902930/12, 902930/20, 902930/22, 902930/50, and 902930/60

Analog input

Measurement input	Pt1000 according to DIN EN 60751, in three-wire circuit
Operating temperature range	-30 to +260 °C in basic type 902930/10 and 902930/20; -50 to +600 °C in basic type 902930/12 and 902930/22; -200 to +600 °C in basic type 902930/50 and 902930/60; Always observe the admissible ambient temperature range for the housing.
Accuracy of the temperature sensor	Class A ±(0.15 K + 0.002 × ltl) ltl = measured temperature in °C without prefix sign
Sensor line resistance	≤ 11 ohm per lead with 3-wire circuit
Sensor current	≤ 500 µA
Measuring circuit monitoring	Detection of probe break and probe short circuit

Output (wireless transmission)

Transmitter detection (transmitter ID)	Max. 5-digit ID, default setting, customer-specific configuration possible
Transmission interval	Adjustable from 1 to 3600 s: In basic type 902930/10, 902930/12, and 902930/50 (default setting = 10 s); Adjustable from 5 to 3600 s: In basic type 902930/20, 902930/22, and 902930/60 (default setting = 15 s)
Radio frequency	868.4 MHz (Europe); 915 MHz (America, Australia, Canada, and New Zealand); 10 frequencies can be configured in the 915 MHz frequency band
Transmission power	< + 10 dBm
Open air range	300 m for 868.4 MHz, 100 m for 915 MHz and when using the antenna holder for wall mounting for the receiver and the 3 m antenna cable. When mounting the antenna directly to the receiver, a reduction in the range of approx. 40 % must be taken into account.
Output signal	882.2 to 1977.1 ohm = -30 to +260 °C; 185.2 to 3137.1 ohm = -200 to +600 °C;
Response time of the complete probe	In water 0.4 m/s / in air 3.0 m/s Ø 4.0 mm: water $t_{0.5}$ approx. 3 s, $t_{0.9}$ approx. 7 s / air $t_{0.5}$ approx. 25 s, $t_{0.9}$ approx. 80 s Ø 6.0 mm: water $t_{0.5}$ approx. 4 s, $t_{0.9}$ approx. 10 s / air $t_{0.5}$ approx. 32 s, $t_{0.9}$ approx. 98 s
Calibration accuracy of the electronic components	≤ ±0.05 %[1]
Configuration	With setup program
Configurable parameters	Transmitter detection (max. 5-digit ID), transmission interval, radio frequency (only at 915 MHz)

Voltage supply

Lithium battery	Voltage: 3.6 V, rated capacity: 2.2 Ah for basic type 902930/10, 902930/12, and 902930/50; Voltage: 3.6 V, rated capacity: 1.7 Ah for basic type 902930/20, 902930/22, and 902930/60
Operating life	Approx. 1 year with the default values and at room temperature (a fast transmission interval and a high or low ambient temperature will reduce the operating life of the lithium battery)
Battery change	Only use the preconfigured lithium battery that is available in the accessories

Environmental influences

Ambient temperature range of the housing	-30 to +85 °C (housing including electronic components) For basic type 902930/10, 902930/12, and 902930/50; -25 to +125 °C (housing including electronic components) For basic type 902930/20, 902930/22, and 902930/60
Storage temperature range	-40 to +85 °C (housing including electronic components) For basic type 902930/10, 902930/12, and 902930/50; -40 to +125 °C (housing including electronic components) For basic type 902930/20, 902930/22, and 902930/60
Temperature influence	≤ ±0.0025 %[1]/K; per K deviation from the reference temperature 22 °C (±3 K) (housing)
Resistance to climatic conditions	Rel. humidity ≤ 95 % w/o condensation according to IEC 68-2-30
Vibration resistance	Max. 2 g at 10 to 2000 Hz (relating to the housing including electronic components) according to DIN IEC 60068-2-6
Admissible mechanical shock resistance	25 g/6 ms (relating to the housing including electronic components) according to DIN IEC 68-2.29 per 1000 cycles

[1] All accuracy specifications in % relating to the measuring range of 290 K or 800 K.

JUMO GmbH & Co. KG
Delivery address: Mackenrodtstraße 14
36039 Fulda, Germany
Postal address: 36035 Fulda, Germany
Phone: +49 661 6003-0
Fax: +49 661 6003-607
Email: mail@jumo.net
Internet: www.jumo.net

JUMO Instrument Co. Ltd.
JUMO House
Temple Bank, Riverway
Harlow, Essex CM 20 2DY, UK
Phone: +44 1279 63 55 33
Fax: +44 1279 62 50 29
Email: sales@jumo.co.uk
Internet: www.jumo.co.uk

JUMO Process Control, Inc.
6733 Myers Road
East Syracuse, NY 13057, USA
Phone: +1 315 437 5866
Fax: +1 315 437 5860
Email: info.us@jumo.net
Internet: www.jumousa.com

Electromagnetic compatibility (EMC) - Interference emission - Interference immunity - Radio frequency spectrum	DIN EN 61326-1 Class B - household and small businesses - Industrial requirements ETSI EN 300 220-1 and ETSI EN 300 220-2

Housing

Material	PEI (polyetherimide), color: black or gray
Flammability class	UL 94 HB
Dimensions	Diameter approx. 32 mm, length approx. 126 mm; for insertion lengths refer to order details
Protection type	IP67 according to DIN EN 60529 for basic type 902930/10, 902930/12, 902930/20, and 902930/22; for basic type 902930/50 and 902930/60 only with the screwed on machine connector M12 × 1
Installation position	Any
Weight	Approx. 120 g (without protection fitting)

Approvals / approval marks

Approval mark	Test facility	Certificates / certification numbers	Inspection basis	Valid for
c UL us	Underwriters Laboratories	E201387	UL 61010-1 CAN/CSA-C22.2 No. 61010-1	3.6 V, Basic type 902930/10 Basic type 902930/12 Basic type 902930/20 Basic type 902930/22 Basic type 902930/50 Basic type 902930/60
IC	Industry Canada	7472A-WTRANST01 7472A-WTRANST0102	RSS-210 Issue 7 RSS-210 Issue 8 RSS-GEN Issue 3 RSS-102 Issue 4	915 MHz, Basic type 902930/10 915 MHz, Basic type 902930/10 Basic type 902930/12 Basic type 902930/20 Basic type 902930/22 Basic type 902930/50 Basic type 902930/60
FCC	Federal Communications Commission	VT4-WTRANST01 VT4-WTRANST01-02	FCC Rule Part 15C FCC Rule Part 15C	915 MHz, Basic type 902930/10 915 MHz, Basic type 902930/10 Basic type 902930/12 Basic type 902930/20 Basic type 902930/22 Basic type 902930/50 Basic type 902930/60

JUMO GmbH & Co. KG
Delivery address: Mackenrodtstraße 14
36039 Fulda, Germany
Postal address: 36035 Fulda, Germany
Phone: +49 661 6003-0
Fax: +49 661 6003-607
Email: mail@jumo.net
Internet: www.jumo.net

JUMO Instrument Co. Ltd.
JUMO House
Temple Bank, Riverway
Harlow, Essex CM 20 2DY, UK
Phone: +44 1279 63 55 33
Fax: +44 1279 62 50 29
Email: sales@jumo.co.uk
Internet: www.jumo.co.uk

JUMO Process Control, Inc.
6733 Myers Road
East Syracuse, NY 13057, USA
Phone: +1 315 437 5866
Fax: +1 315 437 5860
Email: info.us@jumo.net
Internet: www.jumousa.com

Technical data

Basic type 902930/15, 902930/17, and 902930/55

Analog input

Measurement input	Pt1000 according to DIN EN 60751, in three-wire circuit
Operating temperature range	-30 to +260 °C
Accuracy of the temperature sensor	Class A ±(0.15 K + 0.002 × ltl) ltl = measured temperature in °C without prefix sign
Sensor line resistance	≤ 11 ohm per lead with 3-wire circuit
Sensor current	≤ 500 µA
Measuring circuit monitoring	Detection of probe break and probe short circuit

Output (wireless transmission)

Transmitter detection (transmitter ID)	Max. 5-digit ID, default setting, not configurable
Transmission interval	Adjustable via DIP switch to 5 s, 10 s, 20 s, or 45 s (default setting = 20 s)
Radio frequency	868.4 MHz (Europe)
Transmission power	< + 10 dBm
Open air range	300 m when using the antenna holder for wall mounting for the receiver and the 3 m antenna cable. When mounting the antenna directly to the receiver, a reduction in the range of approx. 40 % must be taken into account.
Output signal	882.2 to 1977.1 ohm = -30 to +260 °C
Response time of the complete probe	In water 0.4 m/s / in air 3.0 m/s Ø 4.0 mm: water $t_{0.5}$ approx. 3 s, $t_{0.9}$ approx. 7 s / air $t_{0.5}$ approx. 25 s, $t_{0.9}$ approx. 80 s Ø 6.0 mm: water $t_{0.5}$ approx. 4 s, $t_{0.9}$ approx. 10 s / air $t_{0.5}$ approx. 32 s, $t_{0.9}$ approx. 98 s
Calibration accuracy of the electronic components	≤ ±0.05 %[1]

Voltage supply

Lithium battery	Voltage: 3.6 V, rated capacity: 2.2 Ah
Operating life	Approx. 1 year with the default values and at room temperature (a fast transmission interval and a high or low ambient temperature will reduce the operating life of the lithium battery)
Battery change	Only use the preconfigured lithium battery that is available as an accessory (part no. 00525539)

Environmental influences

Ambient temperature range of the housing	-30 to +85 °C (housing including electronics components) If the operating temperature exceeds the max. ambient temperature, take into account the heat input of the protection fitting into the case. For detailed information, please refer to operating manual Wtrans T03 Ex in the chapter "Heat input by protection tube/protection fitting".
Storage temperature range	-40 to +85 °C (housing including electronic components)
Temperature influence	≤ ±0.0025 %[1]/K; per K deviation from the reference temperature 22 °C (±3 K) (housing)
Resistance to climatic conditions	Rel. humidity ≤ 95 % w/o condensation according to IEC 68-2-30
Vibration resistance	Max. 2 g at 10 to 2000 Hz (relating to the housing including electronic components) according to DIN IEC 60068-2-6
Admissible mechanical shock resistance	25 g/6 ms (relating to the housing including electronic components) according to DIN IEC 68-2.29 per 1000 cycles
Electromagnetic compatibility (EMC) - Interference emission - Interference immunity - Radio frequency spectrum	DIN EN 61326-1 Class B - household and small businesses - Industrial requirements ETSI EN 300 220-1 and ETSI EN 300 220-2

Housing

Material	Basic housing: PA 6, blue Housing cover: PA 6.6 ESD, black
Flammability class	UL 94 HB
Dimensions	Diameter approx. 32 mm, length approx. 126 mm; For insertion lengths refer to order details
Protection type	IP67 according to DIN EN 60529 for basic type 902930/15 and 902930/17; for basic type 902930/55 only with the screwed on M12 × 1 machine connector
Installation position	Any
Weight	Approx. 120 g (without protection fitting)

[1] All accuracy specifications in % relating to the measuring range of 290 K.

JUMO GmbH & Co. KG
Delivery address: Mackenrodtstraße 14
36039 Fulda, Germany
Postal address: 36035 Fulda, Germany
Phone: +49 661 6003-0
Fax: +49 661 6003-607
Email: mail@jumo.net
Internet: www.jumo.net

JUMO Instrument Co. Ltd.
JUMO House
Temple Bank, Riverway
Harlow, Essex CM 20 2DY, UK
Phone: +44 1279 63 55 33
Fax: +44 1279 62 50 29
Email: sales@jumo.co.uk
Internet: www.jumo.co.uk

JUMO Process Control, Inc.
6733 Myers Road
East Syracuse, NY 13057, USA
Phone: +1 315 437 5866
Fax: +1 315 437 5860
Email: info.us@jumo.net
Internet: www.jumousa.com

Ex identification marking

Zone	Identification marking
Use in zone 0 (20)	TÜV 16 ATEX 177609 X II 1 G Ex ia IIB T4 Ga II 1 D Ex ia IIIB T130 °C Da -30 °C ≤ Ta ≤ +85 °C
Use in zone 0 (20) / zone 1 (21) with zone separation by protection fitting	TÜV 16 ATEX 177609 X II 1/2 G Ex ia IIB T4 Ga/Gb II 1/2 D Ex ia IIIB T130 °C Da/Db -30 °C ≤ Ta ≤ +85 °C

Special conditions of use "X"

Take the capacities in the following table into account if the metallic protection tubes for the JUMO Wtrans T03 are not grounded.

Protection tube length	Protection tube diameter			
	2 mm	**> 2 to 4 mm**	**> 4 to 6 mm**	**> 6 to 9 mm**
0 to 100 mm	18.9 pF	25.5 pF	30.4 pF	36.3 pF
> 100 to 170 mm	32.1 pF	43.3 pF	51.6 pF	61.6 pF
> 170 to 270 mm	51.0 pF	68.8 pF	82.0 pF	97.9 pF
> 270 to 370 mm	69.9 pF	94.3 pF	112.4 pF	134.2 pF
> 370 to 570 mm	107.6 pF	145.3 pF	173.1 pF	206.7 pF
> 570 to 820 mm	154.8 pF	209.0 pF	249.0 pF	297.3 pF
> 820 to 1070 mm	202.0 pF	272.7 pF	324.9 pF	388.0 pF
> 1070 to 1570 mm	296.4 pF	400.2 pF	476.8 pF	569.3 pF
> 1570 to 2070 mm	390.8 pF	527.7 pF	628.6 pF	750.6 pF
> 2070 to 2570 mm	485.2 pF	655.1 pF	780.4 pF	931.9 pF

Protection tube length = insertion length (EL) + extension tube length (70 mm as standard); differing extension tube lengths must be taken into account

Only the preconfigured 3.6 V, 2.2 Ah lithium batteries available from the manufacturer as an accessory (part no. 00525539) may be used as replacement batteries.

Approvals / approval marks

Approval mark	Test facility	Certificates / certification numbers	Inspection basis	Valid for
Ex	TÜV NORD CERT GmbH	TÜV 16 ATEX 177609 X	EN 60079-0:2012 + A11:2013 EN 60079-11:2012 EN 60079-26:2015	868.4 MHz, Basic type 902930/15 Basic type 902930/17 Basic type 902930/55

JUMO GmbH & Co. KG
Delivery address: Mackenrodtstraße 14
36039 Fulda, Germany
Postal address: 36035 Fulda, Germany
Phone: +49 661 6003-0
Fax: +49 661 6003-607
Email: mail@jumo.net
Internet: www.jumo.net

JUMO Instrument Co. Ltd.
JUMO House
Temple Bank, Riverway
Harlow, Essex CM 20 2DY, UK
Phone: +44 1279 63 55 33
Fax: +44 1279 62 50 29
Email: sales@jumo.co.uk
Internet: www.jumo.co.uk

JUMO Process Control, Inc.
6733 Myers Road
East Syracuse, NY 13057, USA
Phone: +1 315 437 5866
Fax: +1 315 437 5860
Email: info.us@jumo.net
Internet: www.jumousa.com

Dimensions

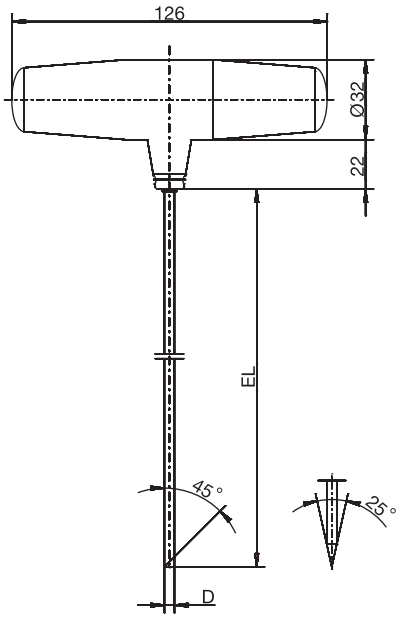

Basic type 902930/10
Basic type 902930/12
Basic type 902930/20
Basic type 902930/22

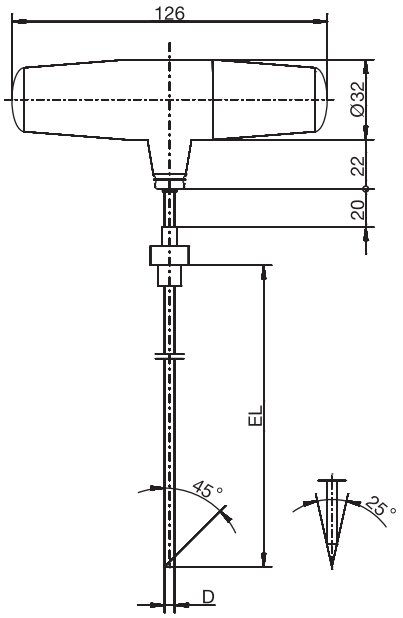

Basic type 902930/10
with process connection
Basic type 902930/12
with process connection
Basic type 902930/20
with process connection
Basic type 902930/22
with process connection

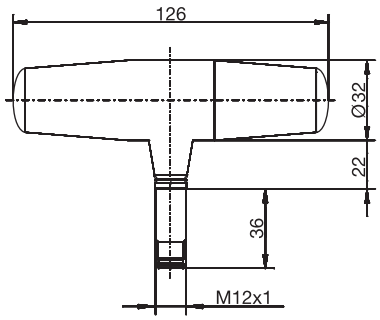

Basic type 902930/50
with M12 x 1 plug connection
Basic type 902930/60
with M12 x 1 plug connection

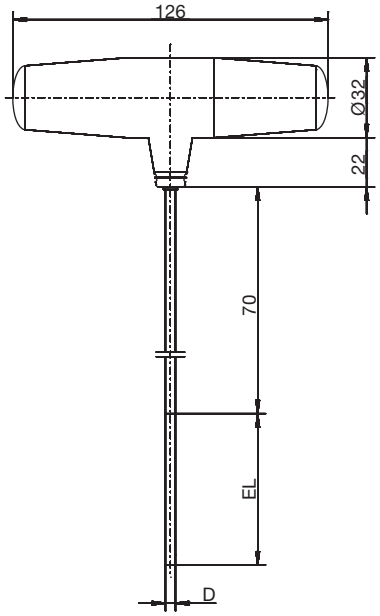

Basic type 902930/15
Basic type 902930/17

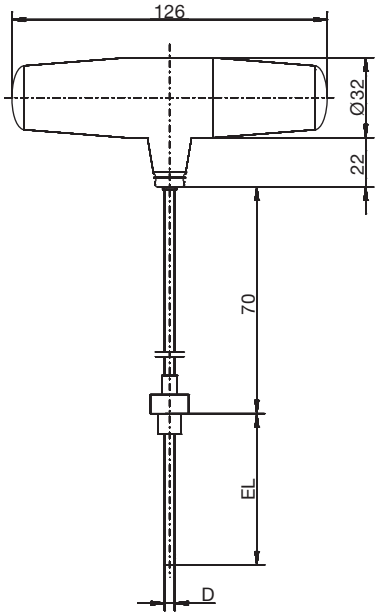

Basic type 902930/15
with process connection
Basic type 902930/17
with process connection

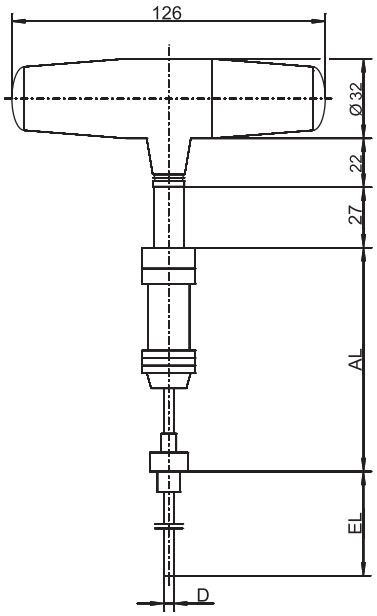

Basic type 902930/55
with M12 × 1 plug connection,
PTFE connecting cable
and process connection

JUMO GmbH & Co. KG
Delivery address: Mackenrodtstraße 14
36039 Fulda, Germany
Postal address: 36035 Fulda, Germany
Phone: +49 661 6003-0
Fax: +49 661 6003-607
Email: mail@jumo.net
Internet: www.jumo.net

JUMO Instrument Co. Ltd.
JUMO House
Temple Bank, Riverway
Harlow, Essex CM 20 2DY, UK
Phone: +44 1279 63 55 33
Fax: +44 1279 62 50 29
Email: sales@jumo.co.uk
Internet: www.jumo.co.uk

JUMO Process Control, Inc.
6733 Myers Road
East Syracuse, NY 13057, USA
Phone: +1 315 437 5866
Fax: +1 315 437 5860
Email: info.us@jumo.net
Internet: www.jumousa.com

Connection diagram

Machine connector M12 x 1, 4-pin according to IEC 60947-5-2

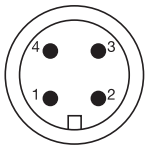

Electrical connection	Terminal assignment
Basic type 902930/50 and 902930/60	
RTD temperature probe in 3-wire circuit (input)	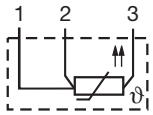

For a safe, interference-free device operation only connect shielded measuring inserts with shielded cables and connected shielding on both sides (shielding connected to protection tube and to M12 x 1 machine connector).

Setup program

The setup program allows transmitters without ATEX approval and receivers to be configured through a PC. The configuration data can be archived on data carriers and printed.
Configurable parameters include:
- Transmitter detection (transmitter ID)
- Transmission interval
- Radio frequency (for 915 MHz only)

The default settings are:
- Transmitter detection (transmitter ID), consecutive
- Transmission interval
- Radio frequency (868.4 MHz or 915.4 MHz)

The setup program can be used to overwrite changed parameters with the factory settings at any time.
The connection between transmitter and PC is established via a PC interface (USB/TTL converter).

For transmitters with ATEX approval, the user can only set the transmission interval via the DIP switch. All other parameters are default settings and cannot be adjusted.

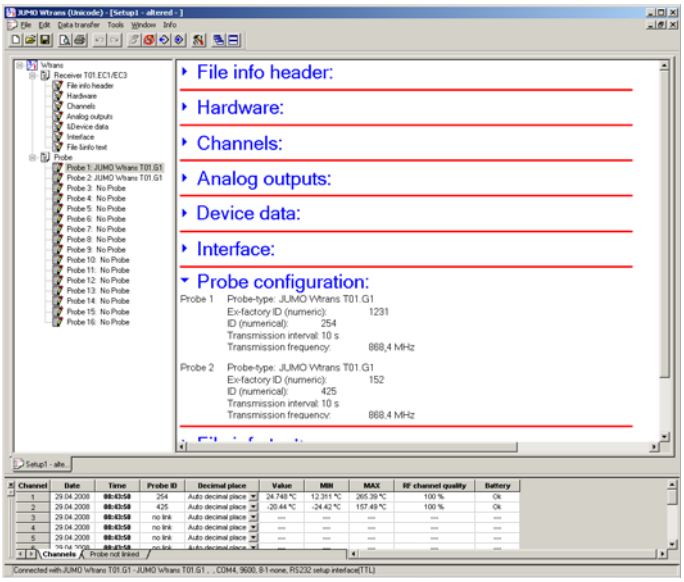

JUMO GmbH & Co. KG
Delivery address: Mackenrodtstraße 14
36039 Fulda, Germany
Postal address: 36035 Fulda, Germany
Phone: +49 661 6003-0
Fax: +49 661 6003-607
Email: mail@jumo.net
Internet: www.jumo.net

JUMO Instrument Co. Ltd.
JUMO House
Temple Bank, Riverway
Harlow, Essex CM 20 2DY, UK
Phone: +44 1279 63 55 33
Fax: +44 1279 62 50 29
Email: sales@jumo.co.uk
Internet: www.jumo.co.uk

JUMO Process Control, Inc.
6733 Myers Road
East Syracuse, NY 13057, USA
Phone: +1 315 437 5866
Fax: +1 315 437 5860
Email: info.us@jumo.net
Internet: www.jumousa.com

Order details: Wtrans T01.G1 insertion RTD temperature probe

		(1)	**Basic type**
	902930/10		Wtrans T01.G1 Insertion RTD temperature probe (Ambient temperature, housing: -30 to +85 °C)
		(2)	**Operating temperature in °C**
x	596		-30 to +260 °C
		(3)	**Measuring insert**
x	1006		1× Pt1000 in 3-wire circuit
		(4)	**Tolerance class according to DIN EN 60751**
x	2		Class A
		(5)	**Protection tube diameter D in mm**
x	2.5		Ø 4 mm stepped down to Ø 2.5 mm (particularly quick responding), available with flat and centered probe tip
x	4		Ø 4 mm
x	4.5		Ø 4.5 mm
x	6		Ø 6 mm
		(6)	**Insertion length EL in mm (EL 50 to 1000 mm)**
x	100		100 mm
x	150		150 mm
x	200		200 mm
x	. . .		For orders, specify in plain text (50 mm increments)
		(7)	**Insertion tip**
x	1		Flat
x	2		Concentric
x	3		Oblique
		(8)	**Radio frequency**
x	10		868.4 MHz (Europe)
x	20		915 MHz (America, Australia, Canada, and New Zealand)
		(9)	**Process connection**
x	000		Without
x	103		Screw connection G 3/8
x	104		Screw connection G 1/2
x	. . .		Other process connections upon request
		(10)	**Extra code**
x	000		Without
x	778		Customer-specific transmission interval, 1 to 3600 s; when ordering, specify in plain text (default setting 10 s)

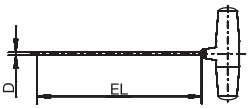

	(1)		(2)		(3)		(4)		(5)		(6)		(7)		(8)		(9)		(10)
Order code		-		-		-		-		-		-		-		-		/	
Order example	902930/10	-	596	-	1006	-	2	-	4	-	100	-	2	-	10	-	000	/	000

JUMO GmbH & Co. KG
Delivery address: Mackenrodtstraße 14
36039 Fulda, Germany
Postal address: 36035 Fulda, Germany
Phone: +49 661 6003-0
Fax: +49 661 6003-607
Email: mail@jumo.net
Internet: www.jumo.net

JUMO Instrument Co. Ltd.
JUMO House
Temple Bank, Riverway
Harlow, Essex CM 20 2DY, UK
Phone: +44 1279 63 55 33
Fax: +44 1279 62 50 29
Email: sales@jumo.co.uk
Internet: www.jumo.co.uk

JUMO Process Control, Inc.
6733 Myers Road
East Syracuse, NY 13057, USA
Phone: +1 315 437 5866
Fax: +1 315 437 5860
Email: info.us@jumo.net
Internet: www.jumousa.com

Scope of delivery

1 device in the ordered version
1 preconfigured lithium battery 3.6 V, 2.2 Ah (ambient temperature, housing: -30 to +85 °C)
4 color rings made of silicone (white, green, red, blue) for visual probe identification
1 operating manual

Accessories

	Part no.
Setup program on CD-ROM, multilingual	00488887
Setup program including OnlineChart on CD-ROM, multilingual	00549067
OnlineChart activation	00549188
Preconfigured lithium battery 3.6 V, 2.2 Ah (ambient temperature, housing: -30 to +85 °C)	00525539
Housing sealing set with axial gaskets made of EPDM (ethylene propylene diene rubber) (content: 3 pieces, white) and radial O-ring seals made of FPM (fluororubber) (content: 3 pieces, black)	00532794
Color rings made of silicone (white, green, red, blue) for visual transmitter identification	00489047
Color cap set made of PEI (polyetherimide) (content 10 pieces, gray) for visual transmitter identification	00525950
Color cap set made of PEI (polyetherimide) (content 10 pieces, brown) for visual transmitter identification	00525951
Color cap set made of PEI (polyetherimide) (content 10 pieces, green) for visual transmitter identification	00525952
Color cap set made of PEI (polyetherimide) (content 10 pieces, blue) for visual transmitter identification	00525953
PC interface with USB/TTL converter, adapter (socket), and adapter (pins)	00456352
Holder for wall mounting for Wtrans T with protection tube diameter 4 mm	00503317
Holder for wall mounting for Wtrans T with protection tube diameter 4.5 mm	00503326
Holder for wall mounting for Wtrans T with protection tube diameter 6 mm	00503328

Stock version

(1)		(2)		(3)		(4)		(5)		(6)		(7)		(8)		(9)		(10)	Part no.
902930/10	-	596	-	1006	-	2	-	4	-	100	-	2	-	10	-	000	/	000	00493668

JUMO GmbH & Co. KG
Delivery address: Mackenrodtstraße 14
36039 Fulda, Germany
Postal address: 36035 Fulda, Germany
Phone: +49 661 6003-0
Fax: +49 661 6003-607
Email: mail@jumo.net
Internet: www.jumo.net

JUMO Instrument Co. Ltd.
JUMO House
Temple Bank, Riverway
Harlow, Essex CM 20 2DY, UK
Phone: +44 1279 63 55 33
Fax: +44 1279 62 50 29
Email: sales@jumo.co.uk
Internet: www.jumo.co.uk

JUMO Process Control, Inc.
6733 Myers Road
East Syracuse, NY 13057, USA
Phone: +1 315 437 5866
Fax: +1 315 437 5860
Email: info.us@jumo.net
Internet: www.jumousa.com

Order details: Wtrans T01.G1 mineral-insulated RTD temperature probe

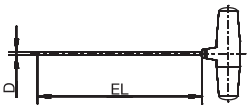

		(1)	**Basic type**
	902930/12		Wtrans T01.G1 Mineral-insulated RTD temperature probe with flexible protection tube (Ambient temperature, housing: -30 to +85 °C)
		(2)	**Operating temperature in °C**
x	415		-50 to +600 °C
		(3)	**Measuring insert**
x	1006		1× Pt1000 in 3-wire circuit
		(4)	**Tolerance class according to DIN EN 60751**
x	2		Class A
		(5)	**Protection tube diameter D in mm**
x	1.9		Ø 1.9 mm
x	3		Ø 3 mm
x	6		Ø 6 mm
		(6)	**Insertion length EL in mm (EL 100 to 10000 mm)**
x	100		100 mm
x	150		150 mm
x	. . .		For orders, specify in plain text (50 mm increments)
		(7)	**Insertion tip**
x	1		Flat
		(8)	**Radio frequency**
x	10		868.4 MHz (Europe)
x	20		915 MHz (America, Australia, Canada, and New Zealand)
		(9)	**Process connection**
x	000		Without
x	. . .		Other process connections upon request
		(10)	**Extra code**
x	000		Without
x	778		Customer-specific transmission interval, 1 to 3600 s; when ordering, specify in plain text (default setting 10 s)

	(1)		(2)		(3)		(4)		(5)		(6)		(7)		(8)		(9)		(10)
Order code		-		-		-		-		-		-		-		-		/	
Order example	902930/12	-	415	-	1006	-	2	-	3	-	100	-	1	-	10	-	000	/	000

JUMO GmbH & Co. KG
Delivery address: Mackenrodtstraße 14
36039 Fulda, Germany
Postal address: 36035 Fulda, Germany
Phone: +49 661 6003-0
Fax: +49 661 6003-607
Email: mail@jumo.net
Internet: www.jumo.net

JUMO Instrument Co. Ltd.
JUMO House
Temple Bank, Riverway
Harlow, Essex CM 20 2DY, UK
Phone: +44 1279 63 55 33
Fax: +44 1279 62 50 29
Email: sales@jumo.co.uk
Internet: www.jumo.co.uk

JUMO Process Control, Inc.
6733 Myers Road
East Syracuse, NY 13057, USA
Phone: +1 315 437 5866
Fax: +1 315 437 5860
Email: info.us@jumo.net
Internet: www.jumousa.com

Scope of delivery

1 device in the ordered version
1 preconfigured lithium battery 3.6 V, 2.2 Ah (ambient temperature, housing: -30 to +85 °C)
4 color rings made of silicone (white, green, red, blue) for visual probe identification
1 operating manual

Accessories

	Part no.
Setup program on CD-ROM, multilingual	00488887
Setup program including OnlineChart on CD-ROM, multilingual	00549067
OnlineChart activation	00549188
Preconfigured lithium battery 3.6 V, 2.2 Ah (ambient temperature, housing: -30 to +85 °C)	00525539
Housing sealing set with axial gaskets made of EPDM (ethylene propylene diene rubber) (content: 3 pieces, white) and radial O-ring seals made of FPM (fluororubber) (content: 3 pieces, black)	00532794
Color rings made of silicone (white, green, red, blue) for visual transmitter identification	00489047
Color cap set made of PEI (polyetherimide) (content 10 pieces, gray) for visual transmitter identification	00525950
Color cap set made of PEI (polyetherimide) (content 10 pieces, brown) for visual transmitter identification	00525951
Color cap set made of PEI (polyetherimide) (content 10 pieces, green) for visual transmitter identification	00525952
Color cap set made of PEI (polyetherimide) (content 10 pieces, blue) for visual transmitter identification	00525953
PC interface with USB/TTL converter, adapter (socket), and adapter (pins)	00456352
Holder for wall mounting for Wtrans T with protection tube diameter 6 mm	00503328

JUMO GmbH & Co. KG
Delivery address: Mackenrodtstraße 14
36039 Fulda, Germany
Postal address: 36035 Fulda, Germany
Phone: +49 661 6003-0
Fax: +49 661 6003-607
Email: mail@jumo.net
Internet: www.jumo.net

JUMO Instrument Co. Ltd.
JUMO House
Temple Bank, Riverway
Harlow, Essex CM 20 2DY, UK
Phone: +44 1279 63 55 33
Fax: +44 1279 62 50 29
Email: sales@jumo.co.uk
Internet: www.jumo.co.uk

JUMO Process Control, Inc.
6733 Myers Road
East Syracuse, NY 13057, USA
Phone: +1 315 437 5866
Fax: +1 315 437 5860
Email: info.us@jumo.net
Internet: www.jumousa.com

Order details: Wtrans T03.G1 Ex insertion RTD temperature probe

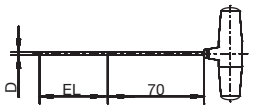

		(1)	**Basic type**
	902930/15		Wtrans T03.G1 Ex Insertion RTD temperature probe with ATEX approval Intrinsically safe device according to ATEX directive (Ambient temperature, housing: -30 to +85 °C) Please specify the requirement for zone separation in plain text!
		(2)	**Operating temperature in °C (protection fitting)**
x	596		-30 to +260 °C
		(3)	**Measuring insert**
x	1006		1× Pt1000 in 3-wire circuit
		(4)	**Tolerance class according to DIN EN 60751**
x	2		Class A
		(5)	**Protection tube diameter D in mm**
x	4		Ø 4 mm
x	6		Ø 6 mm (zone separation possible)
x	9		Ø 9 mm (zone separation possible)
	. . .		Other protection tube diameters upon request
		(6)	**Insertion length EL in mm (EL 30 to 1000 mm)**
x	30		30 mm (take account of 70 mm extension tube length)
x	80		80 mm (take account of 70 mm extension tube length)
x	130		130 mm (take account of 70 mm extension tube length)
x	. . .		For orders, specify in plain text (50 mm increments)
		(7)	**Insertion tip**
x	1		Flat
		(8)	**Radio frequency**
x	10		868.4 MHz (Europe)
		(9)	**Process connection**
x	000		Without
x	103		Screw connection G 3/8 (zone separation possible)
x	104		Screw connection G 1/2 (zone separation possible)
x	. . .		Other process connections upon request
		(10)	**Extra code**
x	**362**		**Ex-protection Ex i according to ATEX directive 2014/34/EU**
x	778		Customer-specific transmission interval 5 s, 10 s, or 45 s; when ordering, please specify in plain text (default setting 20 s)

	(1)		(2)		(3)		(4)		(5)		(6)		(7)		(8)		(9)		(10)	
Order code		-		-		-		-		-		-		-		-		/	**362**	, ...[1]
Order example	902930/15	-	596	-	1006	-	2	-	6	-	80	-	1	-	10	-	000	/	362	

Important information:
The standard extension tube length (position 6) is 70 mm. Upon request, 120 mm can be ordered (when ordering specify in plain text).

The extension tube length is added to the selected insertion length. For the calculation of the heat input a temperature-dependent calculation basis is available for 70 mm and 120 mm extension tube lengths (see operating manual). There are restrictions on the design type of portable Wtrans T03 units due to the special conditions of use "X", which can be found in the operating manual.

[1] List extra codes in sequence, separated by commas.

JUMO GmbH & Co. KG
Delivery address: Mackenrodtstraße 14
36039 Fulda, Germany
Postal address: 36035 Fulda, Germany
Phone: +49 661 6003-0
Fax: +49 661 6003-607
Email: mail@jumo.net
Internet: www.jumo.net

JUMO Instrument Co. Ltd.
JUMO House
Temple Bank, Riverway
Harlow, Essex CM 20 2DY, UK
Phone: +44 1279 63 55 33
Fax: +44 1279 62 50 29
Email: sales@jumo.co.uk
Internet: www.jumo.co.uk

JUMO Process Control, Inc.
6733 Myers Road
East Syracuse, NY 13057, USA
Phone: +1 315 437 5866
Fax: +1 315 437 5860
Email: info.us@jumo.net
Internet: www.jumousa.com

Scope of delivery

1 device in the ordered version
1 preconfigured lithium battery 3.6 V, 2.2 Ah (ambient temperature, housing: -30 to +85 °C)
4 color rings made of silicone (white, green, red, blue) for visual probe identification
1 operating manual

Accessories

	Part no.
Preconfigured lithium battery 3.6 V, 2.2 Ah (ambient temperature, housing: -30 to +85 °C)	00525539
Housing sealing set with axial gaskets made of EPDM (ethylene propylene diene rubber) (content: 3 pieces, white) and radial O-ring seals made of FPM (fluororubber) (content: 3 pieces, black)	00532794
Color rings made of silicone (white, green, red, blue) for visual transmitter identification	00489047

JUMO GmbH & Co. KG
Delivery address: Mackenrodtstraße 14
36039 Fulda, Germany
Postal address: 36035 Fulda, Germany
Phone: +49 661 6003-0
Fax: +49 661 6003-607
Email: mail@jumo.net
Internet: www.jumo.net

JUMO Instrument Co. Ltd.
JUMO House
Temple Bank, Riverway
Harlow, Essex CM 20 2DY, UK
Phone: +44 1279 63 55 33
Fax: +44 1279 62 50 29
Email: sales@jumo.co.uk
Internet: www.jumo.co.uk

JUMO Process Control, Inc.
6733 Myers Road
East Syracuse, NY 13057, USA
Phone: +1 315 437 5866
Fax: +1 315 437 5860
Email: info.us@jumo.net
Internet: www.jumousa.com

Order details: Wtrans T03.G1 Ex mineral-insulated RTD temperature probe

		(1)	**Basic type**
	902930/17		Wtrans T03.G1 Ex Mineral-insulated RTD temperature probe with flexible protection tube and ATEX approval Intrinsically safe device according to ATEX directive (Ambient temperature, housing: -30 to +85 °C) For this basic type, no zone separation is possible!
		(2)	**Operating temperature in °C (protection fitting)**
x	596		-30 to +260 °C
		(3)	**Measuring insert**
x	1006		1× Pt1000 in 3-wire circuit
		(4)	**Tolerance class according to DIN EN 60751**
x	2		Class A
		(5)	**Protection tube diameter D in mm**
x	2		Ø 2 mm
x	3		Ø 3 mm
x	6		Ø 6 mm
		(6)	**Insertion length EL in mm (EL 30 to 10000 mm)**
x	30		30 mm (take account of 70 mm extension tube length)
x	80		80 mm (take account of 70 mm extension tube length)
x	130		130 mm (take account of 70 mm extension tube length)
x	. . .		For orders, specify in plain text (50 mm increments)
		(7)	**Insertion tip**
x	1		Flat
		(8)	**Radio frequency**
x	10		868.4 MHz (Europe)
		(9)	**Process connection**
x	000		Without
x	. . .		Other process connections upon request
		(10)	**Extra code**
x	**362**		**Ex-protection Ex i according to ATEX directive 2014/34/EU**
x	778		Customer-specific transmission interval 5 s, 10 s, or 45 s; when ordering, please specify in plain text (default setting 20 s)

	(1)		(2)		(3)		(4)		(5)		(6)		(7)		(8)		(9)		(10)	
Order code		-		-		-		-		-		-		-		-		/	**362**	, ...[1]
Order example	902930/17	-	596	-	1006	-	2	-	6	-	80	-	1	-	10	-	000	/	362	

Important information:
The standard extension tube length (position 6) is 70 mm. Upon request, 120 mm can be ordered (when ordering specify in plain text).

The extension tube length is added to the selected insertion length. For the calculation of the heat input a temperature-dependent calculation basis is available for 70 mm and 120 mm extension tube lengths (see operating manual).

[1] List extra codes in sequence, separated by commas.

JUMO GmbH & Co. KG
Delivery address: Mackenrodtstraße 14
36039 Fulda, Germany
Postal address: 36035 Fulda, Germany
Phone: +49 661 6003-0
Fax: +49 661 6003-607
Email: mail@jumo.net
Internet: www.jumo.net

JUMO Instrument Co. Ltd.
JUMO House
Temple Bank, Riverway
Harlow, Essex CM 20 2DY, UK
Phone: +44 1279 63 55 33
Fax: +44 1279 62 50 29
Email: sales@jumo.co.uk
Internet: www.jumo.co.uk

JUMO Process Control, Inc.
6733 Myers Road
East Syracuse, NY 13057, USA
Phone: +1 315 437 5866
Fax: +1 315 437 5860
Email: info.us@jumo.net
Internet: www.jumousa.com

Scope of delivery

1 device in the ordered version
1 preconfigured lithium battery 3.6 V, 2.2 Ah (ambient temperature, housing: -30 to +85 °C)
4 color rings made of silicone (white, green, red, blue) for visual probe identification
1 operating manual

Accessories

	Part no.
Preconfigured lithium battery 3.6 V, 2.2 Ah (ambient temperature, housing: -30 to +85 °C)	00525539
Housing sealing set with axial gaskets made of EPDM (ethylene propylene diene rubber) (content: 3 pieces, white) and radial O-ring seals made of FPM (fluororubber) (content: 3 pieces, black)	00532794
Color rings made of silicone (white, green, red, blue) for visual transmitter identification	00489047

JUMO GmbH & Co. KG
Delivery address: Mackenrodtstraße 14
36039 Fulda, Germany
Postal address: 36035 Fulda, Germany
Phone: +49 661 6003-0
Fax: +49 661 6003-607
Email: mail@jumo.net
Internet: www.jumo.net

JUMO Instrument Co. Ltd.
JUMO House
Temple Bank, Riverway
Harlow, Essex CM 20 2DY, UK
Phone: +44 1279 63 55 33
Fax: +44 1279 62 50 29
Email: sales@jumo.co.uk
Internet: www.jumo.co.uk

JUMO Process Control, Inc.
6733 Myers Road
East Syracuse, NY 13057, USA
Phone: +1 315 437 5866
Fax: +1 315 437 5860
Email: info.us@jumo.net
Internet: www.jumousa.com

Order details: Wtrans T02.G1 insertion RTD temperature probe

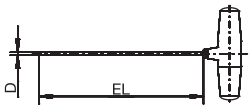

		(1)	**Basic type**
	902930/20		Wtrans T02.G1 Insertion RTD temperature probe (Ambient temperature, housing: -25 to +125 °C)
		(2)	**Operating temperature in °C**
x	596		-30 to +260 °C
		(3)	**Measuring insert**
x	1006		1× Pt1000 in 3-wire circuit
		(4)	**Tolerance class according to DIN EN 60751**
x	2		Class A
		(5)	**Protection tube diameter D in mm**
x	2.5		Ø 4 mm stepped down to Ø 2.5 mm (particularly quick responding), available with flat and centered probe tip
x	4		Ø 4 mm
x	4.5		Ø 4.5 mm
x	6		Ø 6 mm
		(6)	**Insertion length EL in mm (EL 50 to 1000 mm)**
x	100		100 mm
x	150		150 mm
x	200		200 mm
x	. . .		For orders, specify in plain text (50 mm increments)
		(7)	**Insertion tip**
x	1		Flat
x	2		Concentric
x	3		Oblique
		(8)	**Radio frequency**
x	10		868.4 MHz (Europe)
x	20		915 MHz (America, Australia, Canada, and New Zealand)
		(9)	**Process connection**
x	000		Without
x	103		Screw connection G 3/8
x	104		Screw connection G 1/2
x	. . .		Other process connections upon request
		(10)	**Extra code**
x	000		Without
x	778		Customer-specific transmission interval, 5 to 3600 s; when ordering, please specify in plain text (default setting 15 s)

	(1)		(2)		(3)		(4)		(5)		(6)		(7)		(8)		(9)		(10)
Order code		-		-		-		-		-		-		-		-		/	
Order example	902930/20	-	596	-	1006	-	2	-	4	-	100	-	2	-	10	-	000	/	000

JUMO GmbH & Co. KG
Delivery address: Mackenrodtstraße 14
36039 Fulda, Germany
Postal address: 36035 Fulda, Germany
Phone: +49 661 6003-0
Fax: +49 661 6003-607
Email: mail@jumo.net
Internet: www.jumo.net

JUMO Instrument Co. Ltd.
JUMO House
Temple Bank, Riverway
Harlow, Essex CM 20 2DY, UK
Phone: +44 1279 63 55 33
Fax: +44 1279 62 50 29
Email: sales@jumo.co.uk
Internet: www.jumo.co.uk

JUMO Process Control, Inc.
6733 Myers Road
East Syracuse, NY 13057, USA
Phone: +1 315 437 5866
Fax: +1 315 437 5860
Email: info.us@jumo.net
Internet: www.jumousa.com

Scope of delivery

1 device in the ordered version
1 preconfigured lithium battery 3.6 V, 1.7 Ah (ambient temperature, housing: -25 to +125 °C)
4 color rings made of silicone (white, green, red, blue) for visual probe identification
1 operating manual

Accessories

	Part no.
Setup program on CD-ROM, multilingual	00488887
Setup program including OnlineChart on CD-ROM, multilingual	00549067
OnlineChart activation	00549188
Preconfigured lithium battery 3.6 V, 1.7 Ah (ambient temperature, housing: -25 to +125 °C)	00534690
Housing sealing set with axial gaskets made of EPDM (ethylene propylene diene rubber) (content: 3 pieces, white) and radial O-ring seals made of FPM (fluororubber) (content: 3 pieces, black)	00532794
Color rings made of silicone (white, green, red, blue) for visual transmitter identification	00489047
Color cap set made of PEI (polyetherimide) (content 10 pieces, gray) for visual transmitter identification	00525950
Color cap set made of PEI (polyetherimide) (content 10 pieces, brown) for visual transmitter identification	00525951
Color cap set made of PEI (polyetherimide) (content 10 pieces, green) for visual transmitter identification	00525952
Color cap set made of PEI (polyetherimide) (content 10 pieces, blue) for visual transmitter identification	00525953
PC interface with USB/TTL converter, adapter (socket), and adapter (pins)	00456352
Holder for wall mounting for Wtrans T with protection tube diameter 4 mm	00503317
Holder for wall mounting for Wtrans T with protection tube diameter 4.5 mm	00503326
Holder for wall mounting for Wtrans T with protection tube diameter 6 mm	00503328

Stock version

(1)		(2)		(3)		(4)		(5)		(6)		(7)		(8)		(9)		(10)	Part no.
902930/20	-	596	-	1006	-	2	-	4	-	100	-	2	-	10	-	000	/	000	00537803

JUMO GmbH & Co. KG
Delivery address: Mackenrodtstraße 14
36039 Fulda, Germany
Postal address: 36035 Fulda, Germany
Phone: +49 661 6003-0
Fax: +49 661 6003-607
Email: mail@jumo.net
Internet: www.jumo.net

JUMO Instrument Co. Ltd.
JUMO House
Temple Bank, Riverway
Harlow, Essex CM 20 2DY, UK
Phone: +44 1279 63 55 33
Fax: +44 1279 62 50 29
Email: sales@jumo.co.uk
Internet: www.jumo.co.uk

JUMO Process Control, Inc.
6733 Myers Road
East Syracuse, NY 13057, USA
Phone: +1 315 437 5866
Fax: +1 315 437 5860
Email: info.us@jumo.net
Internet: www.jumousa.com

Order details: Wtrans T02.G1 mineral-insulated RTD temperature probe

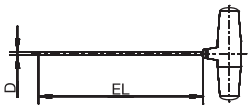

	902930/22	(1)	**Basic type** Wtrans T02.G1 Mineral-insulated RTD temperature probe with flexible protection tube (Ambient temperature, housing: -25 to +125 °C)
		(2)	**Operating temperature in °C**
x	415		-50 to +600 °C
		(3)	**Measuring insert**
x	1006		1× Pt1000 in 3-wire circuit
		(4)	**Tolerance class according to DIN EN 60751**
x	2		Class A
		(5)	**Protection tube diameter D in mm**
x	1.9		Ø 1.9 mm
x	3		Ø 3 mm
x	6		Ø 6 mm
		(6)	**Insertion length EL in mm (EL 100 to 10000 mm)**
x	100		100 mm
x	150		150 mm
x	. . .		For orders, specify in plain text (50 mm increments)
		(7)	**Insertion tip**
x	1		Flat
		(8)	**Radio frequency**
x	10		868.4 MHz (Europe)
x	20		915 MHz (America, Australia, Canada, and New Zealand)
		(9)	**Process connection**
x	000		Without
x	. . .		Other process connections upon request
		(10)	**Extra code**
x	000		Without
x	778		Customer-specific transmission interval, 5 to 3600 s; when ordering, please specify in plain text (default setting 15 s)

	(1)		(2)		(3)		(4)		(5)		(6)		(7)		(8)		(9)		(10)
Order code		-		-		-		-		-		-		-		-		/	
Order example	902930/22	-	415	-	1006	-	2	-	3	-	100	-	1	-	10	-	000	/	000

JUMO GmbH & Co. KG
Delivery address: Mackenrodtstraße 14
36039 Fulda, Germany
Postal address: 36035 Fulda, Germany
Phone: +49 661 6003-0
Fax: +49 661 6003-607
Email: mail@jumo.net
Internet: www.jumo.net

JUMO Instrument Co. Ltd.
JUMO House
Temple Bank, Riverway
Harlow, Essex CM 20 2DY, UK
Phone: +44 1279 63 55 33
Fax: +44 1279 62 50 29
Email: sales@jumo.co.uk
Internet: www.jumo.co.uk

JUMO Process Control, Inc.
6733 Myers Road
East Syracuse, NY 13057, USA
Phone: +1 315 437 5866
Fax: +1 315 437 5860
Email: info.us@jumo.net
Internet: www.jumousa.com

Scope of delivery

1 device in the ordered version
1 preconfigured lithium battery 3.6 V, 1.7 Ah (ambient temperature, housing: -25 to +125 °C)
4 color rings made of silicone (white, green, red, blue) for visual probe identification
1 operating manual

Accessories

	Part no.
Setup program on CD-ROM, multilingual	00488887
Setup program including OnlineChart on CD-ROM, multilingual	00549067
OnlineChart activation	00549188
Preconfigured lithium battery 3.6 V, 1.7 Ah (ambient temperature, housing: -25 to +125 °C)	00534690
Housing sealing set with axial gaskets made of EPDM (ethylene propylene diene rubber) (content: 3 pieces, white) and radial O-ring seals made of FPM (fluororubber) (content: 3 pieces, black)	00532794
Color rings made of silicone (white, green, red, blue) for visual transmitter identification	00489047
Color cap set made of PEI (polyetherimide) (content 10 pieces, gray) for visual transmitter identification	00525950
Color cap set made of PEI (polyetherimide) (content 10 pieces, brown) for visual transmitter identification	00525951
Color cap set made of PEI (polyetherimide) (content 10 pieces, green) for visual transmitter identification	00525952
Color cap set made of PEI (polyetherimide) (content 10 pieces, blue) for visual transmitter identification	00525953
PC interface with USB/TTL converter, adapter (socket), and adapter (pins)	00456352
Holder for wall mounting for Wtrans T with protection tube diameter 6 mm	00503328

JUMO GmbH & Co. KG
Delivery address: Mackenrodtstraße 14
36039 Fulda, Germany
Postal address: 36035 Fulda, Germany
Phone: +49 661 6003-0
Fax: +49 661 6003-607
Email: mail@jumo.net
Internet: www.jumo.net

JUMO Instrument Co. Ltd.
JUMO House
Temple Bank, Riverway
Harlow, Essex CM 20 2DY, UK
Phone: +44 1279 63 55 33
Fax: +44 1279 62 50 29
Email: sales@jumo.co.uk
Internet: www.jumo.co.uk

JUMO Process Control, Inc.
6733 Myers Road
East Syracuse, NY 13057, USA
Phone: +1 315 437 5866
Fax: +1 315 437 5860
Email: info.us@jumo.net
Internet: www.jumousa.com

Order details: Wtrans T01.G2 with M12 × 1 plug connection

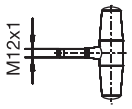

		(1)	**Basic type**
	902930/50		Wtrans T01.G2 with M12 × 1 plug connection For RTD temperature probes (Ambient temperature, housing: -30 to +85 °C)
		(2)	**Operating temperature in °C**
x	150		-200 to +600 °C
		(3)	**Measurement input**
x	1006		1× Pt1000 in 3-wire circuit
		(4)	**Tolerance class according to DIN EN 60751**
x	0		Without (not relevant)
		(5)	**Protection tube diameter D in mm**
x	0		Without (not relevant)
		(6)	**Insertion length EL in mm**
x	000		Without (not relevant)
		(7)	**Insertion tip**
x	0		Without (not relevant)
		(8)	**Radio frequency**
x	10		868.4 MHz (Europe)
x	20		915 MHz (America, Australia, Canada, and New Zealand)
		(9)	**Process connection**
x	000		Without (not relevant)
		(10)	**Extra code**
x	000		Without
x	778		Customer-specific transmission interval, 1 to 3600 s; when ordering, specify in plain text (default setting 10 s)

	(1)		(2)		(3)		(4)		(5)		(6)		(7)		(8)		(9)		(10)
Order code		-		-		-		-		-		-		-		-		/	
Order example	902930/50	-	150	-	1006	-	0	-	0	-	000	-	0	-	10	-	000	/	000

JUMO GmbH & Co. KG
Delivery address: Mackenrodtstraße 14
36039 Fulda, Germany
Postal address: 36035 Fulda, Germany
Phone: +49 661 6003-0
Fax: +49 661 6003-607
Email: mail@jumo.net
Internet: www.jumo.net

JUMO Instrument Co. Ltd.
JUMO House
Temple Bank, Riverway
Harlow, Essex CM 20 2DY, UK
Phone: +44 1279 63 55 33
Fax: +44 1279 62 50 29
Email: sales@jumo.co.uk
Internet: www.jumo.co.uk

JUMO Process Control, Inc.
6733 Myers Road
East Syracuse, NY 13057, USA
Phone: +1 315 437 5866
Fax: +1 315 437 5860
Email: info.us@jumo.net
Internet: www.jumousa.com

Scope of delivery

1 device in the ordered version
1 preconfigured lithium battery 3.6 V, 2.2 Ah (ambient temperature, housing: -30 to +85 °C)
4 color rings made of silicone (white, green, red, blue) for visual probe identification
1 operating manual

Accessories

	Part no.
Setup program on CD-ROM, multilingual	00488887
Setup program including OnlineChart on CD-ROM, multilingual	00549067
OnlineChart activation	00549188
Preconfigured lithium battery 3.6 V, 2.2 Ah (ambient temperature, housing: -30 to +85 °C)	00525539
Housing sealing set with axial gaskets made of EPDM (ethylene propylene diene rubber) (content: 3 pieces, white) and radial O-ring seals made of FPM (fluororubber) (content: 3 pieces, black)	00532794
Color rings made of silicone (white, green, red, blue) for visual transmitter identification	00489047
Color cap set made of PEI (polyetherimide) (content 10 pieces, gray) for visual transmitter identification	00525950
Color cap set made of PEI (polyetherimide) (content 10 pieces, brown) for visual transmitter identification	00525951
Color cap set made of PEI (polyetherimide) (content 10 pieces, green) for visual transmitter identification	00525952
Color cap set made of PEI (polyetherimide) (content 10 pieces, blue) for visual transmitter identification	00525953
PC interface with USB/TTL converter, adapter (socket), and adapter (pins)	00456352
Holder for wall mounting for Wtrans T with M12 × 1 plug connection	00503329
Machine connector M12 × 1, 4-pin according to IEC 60947-5-2	00506319
Push-in RTD temperature probe with Pt1000 temperature sensor and machine connector M12 × 1	
902150/30-386-1006-2-6-100-56-2500/315, 317 Protection tube diameter 6 mm, insertion length 100 mm, connecting cable length 2500 mm	00514417
902150/30-386-1006-2-6-200-56-2500/315, 317 Protection tube diameter 6 mm, insertion length 200 mm, connecting cable length 2500 mm	00514440

Note: for compression fittings and flanges refer to data sheet 909750

Stock version

(1)		(2)		(3)		(4)		(5)		(6)		(7)		(8)		(9)		(10)	Part no.
902930/50	-	150	-	1006	-	0	-	0	-	000	-	0	-	10	-	000	/	000	00506791

JUMO GmbH & Co. KG
Delivery address: Mackenrodtstraße 14
36039 Fulda, Germany
Postal address: 36035 Fulda, Germany
Phone: +49 661 6003-0
Fax: +49 661 6003-607
Email: mail@jumo.net
Internet: www.jumo.net

JUMO Instrument Co. Ltd.
JUMO House
Temple Bank, Riverway
Harlow, Essex CM 20 2DY, UK
Phone: +44 1279 63 55 33
Fax: +44 1279 62 50 29
Email: sales@jumo.co.uk
Internet: www.jumo.co.uk

JUMO Process Control, Inc.
6733 Myers Road
East Syracuse, NY 13057, USA
Phone: +1 315 437 5866
Fax: +1 315 437 5860
Email: info.us@jumo.net
Internet: www.jumousa.com

Order details: Wtrans T03.G2 Ex with M12 × 1 plug connection

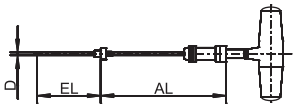

		(1)	**Basic type**
	902930/55		Wtrans T03.G2 Ex with M12 × 1 plug connection and RTD temperature probe with PTFE connecting cable and ATEX approval Intrinsically safe device according to ATEX directive (Ambient temperature, housing: -30 to +85 °C) Please specify the requirement for zone separation in plain text!
		(2)	**Operating temperature in °C (protection fitting)**
x	596		-30 to +260 °C
		(3)	**Measurement input**
x	1006		1× Pt1000 in 3-wire circuit
		(4)	**Tolerance class according to DIN EN 60751**
x	2		Class A
		(5)	**Protection tube diameter D in mm**
x	4		Ø 4 mm
x	6		Ø 6 mm (zone separation possible)
x	9		Ø 9 mm (zone separation possible)
		(6)	**Insertion length EL in mm (EL 100 to 1000 mm)**
x	100		100 mm
x	150		150 mm
x	200		200 mm
x	. . .		For orders, specify in plain text (50 mm increments)
		(7)	**Insertion tip**
x	1		Flat
		(8)	**Radio frequency**
x	10		868.4 MHz (Europe)
		(9)	**Process connection**
x	000		Without
x	103		Screw connection G 3/8 (zone separation possible)
x	104		Screw connection G 1/2 (zone separation possible)
		(10)	**Extra code**
x	**362**		**Ex-protection Ex i according to ATEX directive 2014/34/EU**
x	778		Customer-specific transmission interval 5 s, 10 s, or 45 s; when ordering, please specify in plain text (default setting 20 s)

	(1)		(2)		(3)		(4)		(5)		(6)		(7)		(8)		(9)		(10)	
Order code		-		-		-		-		-		-		-		-		/	**362**	, ...[1]
Order example	902930/55	-	596	-	1006	-	2	-	6	-	150	-	1	-	10	-	000	/	362	

Important information:
When ordering, specify the PTFE connecting cable length (AL) in plain text!
Only use basic type 902930/55 with the corresponding JUMO RTD temperature probes with PTFE connecting cable.
The design type of the JUMO RTD temperature probes is to be discussed when ordering.

[1] List extra codes in sequence, separated by commas.

JUMO GmbH & Co. KG
Delivery address: Mackenrodtstraße 14
36039 Fulda, Germany
Postal address: 36035 Fulda, Germany
Phone: +49 661 6003-0
Fax: +49 661 6003-607
Email: mail@jumo.net
Internet: www.jumo.net

JUMO Instrument Co. Ltd.
JUMO House
Temple Bank, Riverway
Harlow, Essex CM 20 2DY, UK
Phone: +44 1279 63 55 33
Fax: +44 1279 62 50 29
Email: sales@jumo.co.uk
Internet: www.jumo.co.uk

JUMO Process Control, Inc.
6733 Myers Road
East Syracuse, NY 13057, USA
Phone: +1 315 437 5866
Fax: +1 315 437 5860
Email: info.us@jumo.net
Internet: www.jumousa.com

Scope of delivery

1 device in the ordered version
1 preconfigured lithium battery 3.6 V, 2.2 Ah (ambient temperature, housing: -30 to +85 °C)
4 color rings made of silicone (white, green, red, blue) for visual probe identification
1 operating manual

Accessories

	Part no.
Preconfigured lithium battery 3.6 V, 2.2 Ah (ambient temperature, housing: -30 to +85 °C)	00525539
Housing sealing set with axial gaskets made of EPDM (ethylene propylene diene rubber) (content: 3 pieces, white) and radial O-ring seals made of FPM (fluororubber) (content: 3 pieces, black)	00532794
Color rings made of silicone (white, green, red, blue) for visual transmitter identification	00489047

JUMO GmbH & Co. KG
Delivery address: Mackenrodtstraße 14
36039 Fulda, Germany
Postal address: 36035 Fulda, Germany
Phone: +49 661 6003-0
Fax: +49 661 6003-607
Email: mail@jumo.net
Internet: www.jumo.net

JUMO Instrument Co. Ltd.
JUMO House
Temple Bank, Riverway
Harlow, Essex CM 20 2DY, UK
Phone: +44 1279 63 55 33
Fax: +44 1279 62 50 29
Email: sales@jumo.co.uk
Internet: www.jumo.co.uk

JUMO Process Control, Inc.
6733 Myers Road
East Syracuse, NY 13057, USA
Phone: +1 315 437 5866
Fax: +1 315 437 5860
Email: info.us@jumo.net
Internet: www.jumousa.com

Order details: Wtrans T02.G2 with M12 × 1 plug connection

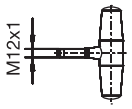

		(1)	**Basic type**
	902930/60		Wtrans T02.G2 with M12 × 1 plug connection for RTD temperature probes (Ambient temperature, housing: -25 to +125 °C)
		(2)	**Operating temperature in °C**
x	150		-200 to +600 °C
		(3)	**Measurement input**
x	1006		1× Pt1000 in 3-wire circuit
		(4)	**Tolerance class according to DIN EN 60751**
x	0		Without (not relevant)
		(5)	**Protection tube diameter D in mm**
x	0		Without (not relevant)
		(6)	**Insertion length EL in mm**
x	000		Without (not relevant)
		(7)	**Insertion tip**
x	0		Without (not relevant)
		(8)	**Radio frequency**
x	10		868.4 MHz (Europe)
x	20		915 MHz (America, Australia, Canada, and New Zealand)
		(9)	**Process connection**
x	000		Without (not relevant)
		(10)	**Extra code**
x	000		Without
x	778		Customer-specific transmission interval, 5 to 3600 s; when ordering, please specify in plain text (default setting 15 s)

	(1)		(2)		(3)		(4)		(5)		(6)		(7)		(8)		(9)		(10)
Order code		-		-		-		-		-		-		-		-		/	
Order example	902930/60	-	150	-	1006	-	0	-	0	-	000	-	0	-	10	-	000	/	000

JUMO GmbH & Co. KG
Delivery address: Mackenrodtstraße 14
36039 Fulda, Germany
Postal address: 36035 Fulda, Germany
Phone: +49 661 6003-0
Fax: +49 661 6003-607
Email: mail@jumo.net
Internet: www.jumo.net

JUMO Instrument Co. Ltd.
JUMO House
Temple Bank, Riverway
Harlow, Essex CM 20 2DY, UK
Phone: +44 1279 63 55 33
Fax: +44 1279 62 50 29
Email: sales@jumo.co.uk
Internet: www.jumo.co.uk

JUMO Process Control, Inc.
6733 Myers Road
East Syracuse, NY 13057, USA
Phone: +1 315 437 5866
Fax: +1 315 437 5860
Email: info.us@jumo.net
Internet: www.jumousa.com

Scope of delivery

1 device in the ordered version
1 preconfigured lithium battery 3.6 V, 1.7 Ah (ambient temperature, housing: -25 to +125 °C)
4 color rings made of silicone (white, green, red, blue) for visual probe identification
1 operating manual

Accessories

	Part no.
Setup program on CD-ROM, multilingual	00488887
Setup program including OnlineChart on CD-ROM, multilingual	00549067
OnlineChart activation	00549188
Preconfigured lithium battery 3.6 V, 1.7 Ah (ambient temperature, housing: -25 to +125 °C)	00534690
Housing sealing set with axial gaskets made of EPDM (ethylene propylene diene rubber) (content: 3 pieces, white) and radial O-ring seals made of FPM (fluororubber) (content: 3 pieces, black)	00532794
Color rings made of silicone (white, green, red, blue) for visual transmitter identification	00489047
Color cap set made of PEI (polyetherimide) (content 10 pieces, gray) for visual transmitter identification	00525950
Color cap set made of PEI (polyetherimide) (content 10 pieces, brown) for visual transmitter identification	00525951
Color cap set made of PEI (polyetherimide) (content 10 pieces, green) for visual transmitter identification	00525952
Color cap set made of PEI (polyetherimide) (content 10 pieces, blue) for visual transmitter identification	00525953
PC interface with USB/TTL converter, adapter (socket), and adapter (pins)	00456352
Holder for wall mounting for Wtrans T with M12 × 1 plug connection	00503329
Machine connector M12 × 1, 4-pin according to IEC 60947-5-2	00506319
Push-in RTD temperature probe with Pt1000 temperature sensor and machine connector M12 × 1	
902150/30-386-1006-2-6-100-56-2500/315, 317 Protection tube diameter 6 mm, insertion length 100 mm, connecting cable length 2500 mm	00514417
902150/30-386-1006-2-6-200-56-2500/315, 317 Protection tube diameter 6 mm, insertion length 200 mm, connecting cable length 2500 mm	00514440

Note: for compression fittings and flanges refer to data sheet 909750

Stock version

(1)		(2)		(3)		(4)		(5)		(6)		(7)		(8)		(9)		(10)	Part no.
902930/60	-	150	-	1006	-	0	-	0	-	000	-	0	-	10	-	000	/	000	00537805

JUMO GmbH & Co. KG
Delivery address: Mackenrodtstraße 14
36039 Fulda, Germany
Postal address: 36035 Fulda, Germany
Phone: +49 661 6003-0
Fax: +49 661 6003-607
E-mail: mail@jumo.net
Internet: www.jumo.net

JUMO Instrument Co. Ltd.
JUMO House
Temple Bank, Riverway
Harlow, Essex CM20 2DY, UK
Phone: +44 1279 635533
Fax: +44 1279 635262
E-mail: sales@jumo.co.uk
Internet: www.jumo.co.uk

JUMO Process Control, Inc.
6733 Myers Road
East Syracuse, NY 13057, USA
Phone: 315-437-5866
1-800-554-5866
Fax: 315-437-5860
E-mail: info.us@jumo.net
Internet: www.jumousa.com

JUMO Wtrans Receiver
Universal Receiver
for JUMO Wireless Measuring Probes

- **For processing physical measurands of the JUMO Wtrans series**
- **RS485 interface with Modbus protocol**
- **Wireless measured value reception**
- **No wiring work required due to modern wireless technology**
- **For max. 16 measured values per receiver**

Basic type 902931/10

The Wtrans receiver T01 in combination with suitable Wtrans transmitters is used for mobile or stationary measurements of physical measurands. A significant reduction of the installation work is achieved due to the use of trendsetting wireless technology found in the industrial radio frequency 868.4 MHz or 915 MHz. Cable connections are not required, the radio-based sensor technology also functions in a rough industrial environment. The supplied lambda/4 antenna with an impedance of 50 ohm can be directly screwed on or mounted externally. If the antenna holder for wall mounting with a 3 m antenna cable is used, then the open air range is 300 m. In the receiver the received measured values are converted, displayed, and are available as linear current or voltage signals [0(4) to 20 mA, 0 to 10 V] and via the digital interface RS485. All receiver outputs are galvanically isolated. A connection to higher-ranking systems (such as the plant visualization software JUMO SVS3000 or the Modbus master-compatible JUMO LOGOSCREEN nt paperless recorder) is possible via the digital interface with Modbus protocol.
Operation and configuration can be performed via the keypad in conjunction with a 2-line LCD display, or with a setup program for greater convenience. This way, parameters such as filter constants, offset, alarms, and drag indicators (minimum and maximum value memory) can be set separately for each channel. For this purpose, a connector is provided on the front for a PC interface with USB/TTL converter for connecting the receiver and the PC. The receiver in the mounting rail case is intended for mounting on a DIN-rail 35 mm × 7.5 mm according to DIN EN 60715. The screw terminals for the electrical connection are located at different levels. The conductor cross section should not be bigger than 2.5 mm^2.

Block diagram

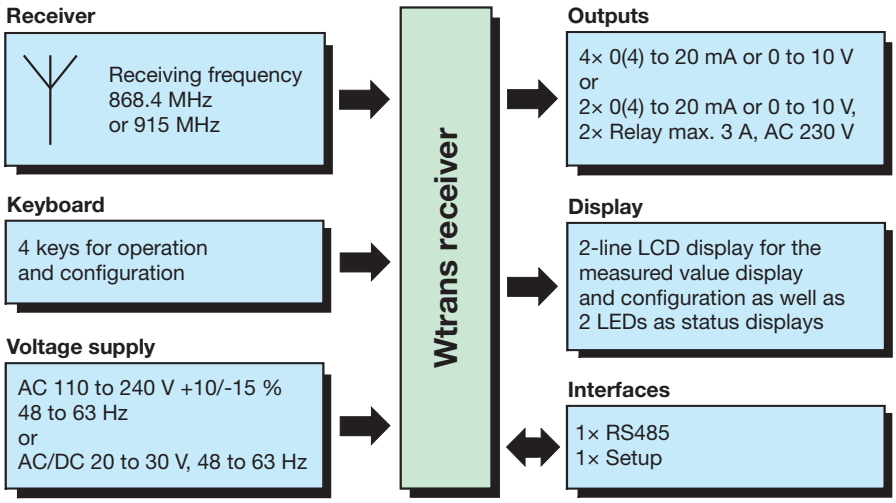

Suitable Wtrans transmitters:

- Wtrans T,
  data sheet 902930
- Wtrans B,
  data sheet 707060
- Wtrans p,
  data sheet 402060
- Wtrans E01,
  data sheet 902928

For further information see page 10/10

Approvals/approval marks (see "Technical data")

2014-10-21/00473257

JUMO GmbH & Co. KG
Delivery address: Mackenrodtstraße 14
36039 Fulda, Germany
Postal address: 36035 Fulda, Germany
Phone: +49 661 6003-0
Fax: +49 661 6003-607
E-mail: mail@jumo.net
Internet: www.jumo.net

JUMO Instrument Co. Ltd.
JUMO House
Temple Bank, Riverway
Harlow, Essex CM20 2DY, UK
Phone: +44 1279 635533
Fax: +44 1279 635262
E-mail: sales@jumo.co.uk
Internet: www.jumo.co.uk

JUMO Process Control, Inc.
6733 Myers Road
East Syracuse, NY 13057, USA
Phone: 315-437-5866
1-800-554-5866
Fax: 315-437-5860
E-mail: info.us@jumo.net
Internet: www.jumousa.com

Technical data

Input

Number of transmitters	Up to 16 measured values can be received per receiver.
Radio frequency	868.4 MHz (Europa), 915 MHz (America, Australia, Canada, and New Zealand); Ten frequencies are configurable in the 915 MHz frequency band
Open air range	Up to 300 m when using the antenna holder for wall mounting with a 3 m antenna cable. When mounting the antenna directly to the receiver, a reduction in the range of approx. 40 % must be taken into account.
Measuring range limits	Dependent on the set sensor
Configuration	Using the keys on the device or with the setup program
Unit	The units for temperature, pressure, potentiometer, and voltage are configurable on the device or with the setup program.

Analog outputs

Number	4 analog outputs for basic type 902931/10, 2 analog outputs for basic type 902931/30
Output signal Current Voltage	Configurable with the keys on the device or with the setup program Load-independent direct current 0 to 20 mA or 4 to 20 mA Direct voltage 0 to 10 V
Transmission behavior	Linear, freely scalable
Burden (at current output)	≤ 500 ohm
Load (at voltage output)	≥ 10 k ohm
Setting time for temperature changes	The setting time depends on the transmission interval that is set in the transmitter.
Setting time after switch-on or reset	≤ 5 s
Calibration conditions	AC 230 V/22 °C (±3 K) or DC 24 V/22 °C (±3 K)
Accuracy	≤ ±0.1 %[a] (accuracy includes calibration, linearization, burden influence, load influence, and voltage supply influence)
Residual ripple	≤ ±0.2 %[a]
Galvanic isolation	The analog outputs are galvanically isolated from each other and the interfaces.
Isolation voltage	50 V

[a] All accuracy specifications in % from the measuring range end value of 20 mA or 10 V.

Measuring circuit monitoring of the analog outputs

Underrange Current output 4 to 20 mA Current output 0 to 20 mA Voltage output 0 to 10 V	 Dropping to 3.8 mA, then jump to the configured signaling Dropping to -0.1 mA, then jump to the configured signaling Dropping to -0.1 V, then jump to the configured signaling
Overrange Current output 4 to 20 mA Current output 0 to 20 mA Voltage output 0 to 10 V	 Increasing to 20.5 mA, then jump to the configured signaling Increasing to 20.5 mA, then jump to the configured signaling Increasing to 10.25 V, then jump to the configured signaling
Probe short circuit or probe/cable break and alarms Current output 4 to 20 mA Current output 0 to 20 mA Voltage output 0 to 10 V	 Positive signaling: > 21 mA Negative signaling: < 3.6 mA Positive signaling: > 21 mA Negative signaling: < -0.1 mA Positive signaling: > 10.5 V Negative signaling: < -0.1 V
Output behavior	The output behavior (positive or negative signaling) is configurable.

JUMO GmbH & Co. KG
Delivery address: Mackenrodtstraße 14
36039 Fulda, Germany
Postal address: 36035 Fulda, Germany
Phone: +49 661 6003-0
Fax: +49 661 6003-607
E-mail: mail@jumo.net
Internet: www.jumo.net

JUMO Instrument Co. Ltd.
JUMO House
Temple Bank, Riverway
Harlow, Essex CM20 2DY, UK
Phone: +44 1279 635533
Fax: +44 1279 635262
E-mail: sales@jumo.co.uk
Internet: www.jumo.co.uk

JUMO Process Control, Inc.
6733 Myers Road
East Syracuse, NY 13057, USA
Phone: 315-437-5866
1-800-554-5866
Fax: 315-437-5860
E-mail: info.us@jumo.net
Internet: www.jumousa.com

Relay outputs

Number	2 relay outputs for basic type 902931/30
Relay	N/O contact configurable as N/C contact
Switching capacity	Up to 3 A at AC 230 V resistive load
Contact life	150,000 operations at 3 A / AC 230 V resistive load 350,000 operations at 1 A / AC 230 V resistive load 310,000 operations at 1 A / AC 230 V and cos phi > 0.7
Galvanic isolation	Relay to analog outputs and interface; test voltage AC 3700 V (reinforced insulation) Relay to relay; test voltage AC 2300 V (basic insulation) Combined operation of mains voltage AC 230 V and SELV or PELV voltage is not admissible due to the basic insulation between the relays.

Electrical data

Voltage supply	AC 110 to 240 V +10/-15 %, 48 to 63 Hz or AC/DC 20 to 30 V, 48 to 63 Hz
Power consumption	12 VA
Electrical connection	Screw terminals up to 2.5 mm^2
Electrical safety	According to DIN EN 61010, part 1 overvoltage category III, pollution degree 2, for installation into a control cabinet according to DIN EN 50178
Galvanic isolation	The voltage supply is galvanically isolated from the analog outputs, relays, and interfaces.
Test voltage	AC 3700 V

Environmental influences

Ambient temperature range	-20 to +50 °C without condensation (even with close mounting)
Storage temperature range	-30 to +70 °C
Temperature influence	≤ ±0.005 %[a]/K; per K deviation from the reference temperature 22 °C (±3 K)
Resistance to climatic conditions	Rel. humidity ≤ 85 % without condensation according to DIN EN 60721-3-3 3K3
Vibration resistance	Max. 1 g at 10 to 55 Hz according to DIN IEC 60068-2-6
Electromagnetic compatibility (EMC)	DIN EN 61326-1
Interference emission	Class A - only for industrial use
Interference immunity	Industrial requirements
Radio frequency spectrum	ETSI EN 300 220-1 and ETSI EN 300 220-2

[a] All accuracy specifications in % from the measuring range end value of 20 mA or 10 V.

Case

Material	Polyamide
Flammability class	UL 94 V-2
Dimensions with antenna screw connection (W × H × D)	22.5 mm × 115.0 mm × 117.8 mm
Mounting	DIN-rail 35 mm × 7.5 mm according to EN 60715
Protection type	IP20 according to DIN EN 60529
Installation position	Vertical ⊥
Weight	Approx. 200 g

JUMO GmbH & Co. KG
Delivery address: Mackenrodtstraße 14
36039 Fulda, Germany
Postal address: 36035 Fulda, Germany
Phone: +49 661 6003-0
Fax: +49 661 6003-607
E-mail: mail@jumo.net
Internet: www.jumo.net

JUMO Instrument Co. Ltd.
JUMO House
Temple Bank, Riverway
Harlow, Essex CM20 2DY, UK
Phone: +44 1279 635533
Fax: +44 1279 635262
E-mail: sales@jumo.co.uk
Internet: www.jumo.co.uk

JUMO Process Control, Inc.
6733 Myers Road
East Syracuse, NY 13057, USA
Phone: 315-437-5866
1-800-554-5866
Fax: 315-437-5860
E-mail: info.us@jumo.net
Internet: www.jumousa.com

Interfaces

Setup interface	
Baud rate	9600
PC interface	With TTL/RS232 or with USB/TTL converter
RS485 interface	
Protocol	Modbus
Baud rate	9600, 19200, 38400
Device address	1 to 254
Minimum response time	0 to 500 ms

LCD display

Top line	4-digit, 7-segment display, 4.5 mm high
Bottom line	5-digit, 16-segment display, 4.0 mm high

Approvals/approval marks

Approval mark	Testing agency	Certificates/certification numbers	Inspection basis	Valid for
c UL us	Underwriters Laboratories	E201387	UL 61010-1 CAN/CSA-C22.2 No. 61010-1	915 MHz, 230 V, Basic type 902931/10
IC	Industry Canada	7472A-WTRANST01 7472A-WTRANST0102	RSS-210 Issue 7 RSS-210 Issue 8 RSS-GEN Issue 3 RSS-102 Issue 4	915 MHz, 230 V, Basic type 902931/10
FCC	Federal Communications Commission	VT4-WTRANST01 VT4-WTRANST01-02	FCC Rule Part 15C FCC Rule Part 15C	915 MHz, 230 V, Basic type 902931/10

JUMO GmbH & Co. KG
Delivery address: Mackenrodtstraße 14
36039 Fulda, Germany
Postal address: 36035 Fulda, Germany
Phone: +49 661 6003-0
Fax: +49 661 6003-607
E-mail: mail@jumo.net
Internet: www.jumo.net

JUMO Instrument Co. Ltd.
JUMO House
Temple Bank, Riverway
Harlow, Essex CM20 2DY, UK
Phone: +44 1279 635533
Fax: +44 1279 635262
E-mail: sales@jumo.co.uk
Internet: www.jumo.co.uk

JUMO Process Control, Inc.
6733 Myers Road
East Syracuse, NY 13057, USA
Phone: 315-437-5866
1-800-554-5866
Fax: 315-437-5860
E-mail: info.us@jumo.net
Internet: www.jumousa.com

Operation and configuration

At the receiver

Operation and configuration of the receiver require four keys located at the front. These have various functions depending on the menu. The dialog is supported by a 2-line LCD display. Two LEDs signal various operating statuses. The operation and configuration of the parameters are organized into three different levels:

- Normal display (display of values and signal quality)
- Start-up level (channel linking to transmitter ID)
- Parameter level (editing of configuration parameters)

Each of the two levels can be protected against unauthorized access by a code.

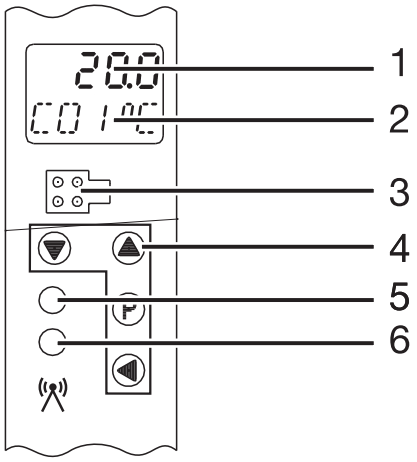

1 7-segment LCD display, 4.5 mm, 4-digit

2 16-segment LCD display, 4.0 mm, 5-digit

3 Setup interface

4 Function keys

5 Bicolor LED
- Green = malfunction-free operation
- Flashing red = collective alarm (the collective alarm covers the wireless timeout of transmitters 1 to 16, the limit value monitoring min./max. of channels C01 to C16, memory errors detected at power on, and the low battery signal of transmitters 1 to 16)

6 Yellow short flashing LED
- Receipt control for each data packet from the transmitter

Setup program

Configuration via the setup program is more convenient than using the receiver keypad. The configuration data can be archived on data storage devices and printed.
All configurable parameters are described in the operating manual.
The setup program can be used to overwrite changed parameters with the default settings at any time.
The connection between the receiver and PC is established via a PC interface (USB/TTL convertor).

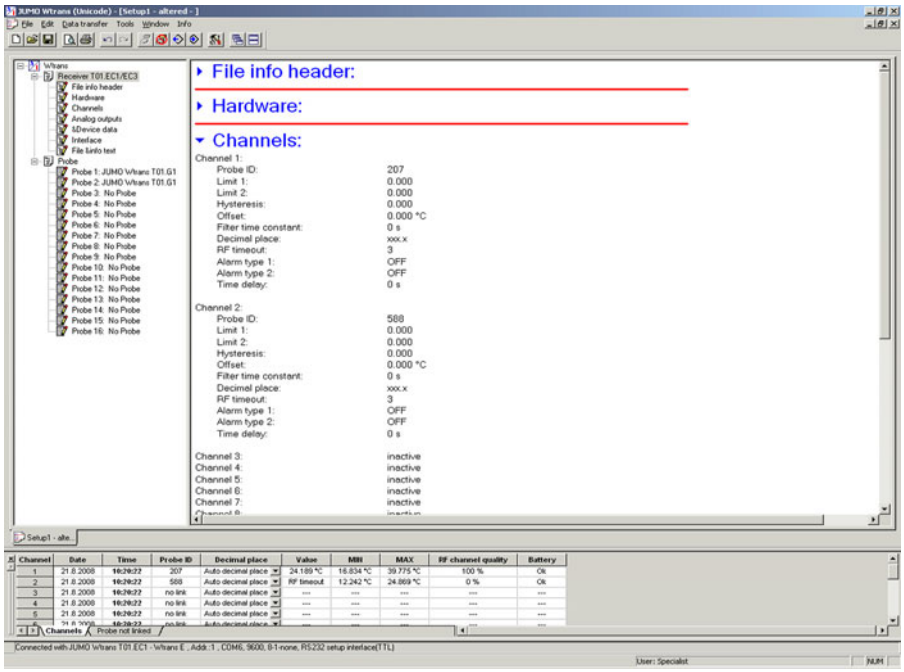

OnlineChart (optional)
The OnlineChart extension can graphically display and save the measured values of eight analog and four binary channels.

Customer-specific linearization
For transmitters with potentiometer or voltage input, the user can define up to four customer-specific linearizations (value pairs or polynomial formula).

JUMO GmbH & Co. KG
Delivery address: Mackenrodtstraße 14
36039 Fulda, Germany
Postal address: 36035 Fulda, Germany
Phone: +49 661 6003-0
Fax: +49 661 6003-607
E-mail: mail@jumo.net
Internet: www.jumo.net

JUMO Instrument Co. Ltd.
JUMO House
Temple Bank, Riverway
Harlow, Essex CM20 2DY, UK
Phone: +44 1279 635533
Fax: +44 1279 635262
E-mail: sales@jumo.co.uk
Internet: www.jumo.co.uk

JUMO Process Control, Inc.
6733 Myers Road
East Syracuse, NY 13057, USA
Phone: 315-437-5866
1-800-554-5866
Fax: 315-437-5860
E-mail: info.us@jumo.net
Internet: www.jumousa.com

Assignment of transmitters to the receiver (linking)

A receiver can display and process data from up to 16 transmitters. Each transmitter must be linked with the receiver. Three linking methods are available:

- On the device via a list of received, non-linked transmitter IDs or by directly entering the transmitter ID
- Using the setup program, and
- Via the RS485 interface by Modbus commands

The list of received, non-linked transmitter IDs is automatically maintained by the receiver. The transmitter IDs are automatically detected in this list (max. 25 entries); then they are entered and deleted. The transmitter ID can be directly entered at the device or with the setup program. The transmitter IDs can also be set from a Modbus master (such as a PLC) via the RS485 interface at any time.

Open air range

The open air range is 300 m. To achieve this receiving quality and to achieve an optimum adaptation of the lambda/4-antenna, use the antenna holder for wall mounting with the 3 m antenna cable (available in the accessories). When mounting the antenna directly to the receiver, a reduction in the range of approx. 40 % must be taken into account. The range may be additionally reduced by buildings, concrete ceilings, walls, and other structural works.

JUMO GmbH & Co. KG
Delivery address: Mackenrodtstraße 14
36039 Fulda, Germany
Postal address: 36035 Fulda, Germany
Phone: +49 661 6003-0
Fax: +49 661 6003-607
E-mail: mail@jumo.net
Internet: www.jumo.net

JUMO Instrument Co. Ltd.
JUMO House
Temple Bank, Riverway
Harlow, Essex CM20 2DY, UK
Phone: +44 1279 635533
Fax: +44 1279 635262
E-mail: sales@jumo.co.uk
Internet: www.jumo.co.uk

JUMO Process Control, Inc.
6733 Myers Road
East Syracuse, NY 13057, USA
Phone: 315-437-5866
1-800-554-5866
Fax: 315-437-5860
E-mail: info.us@jumo.net
Internet: www.jumousa.com

Dimensions

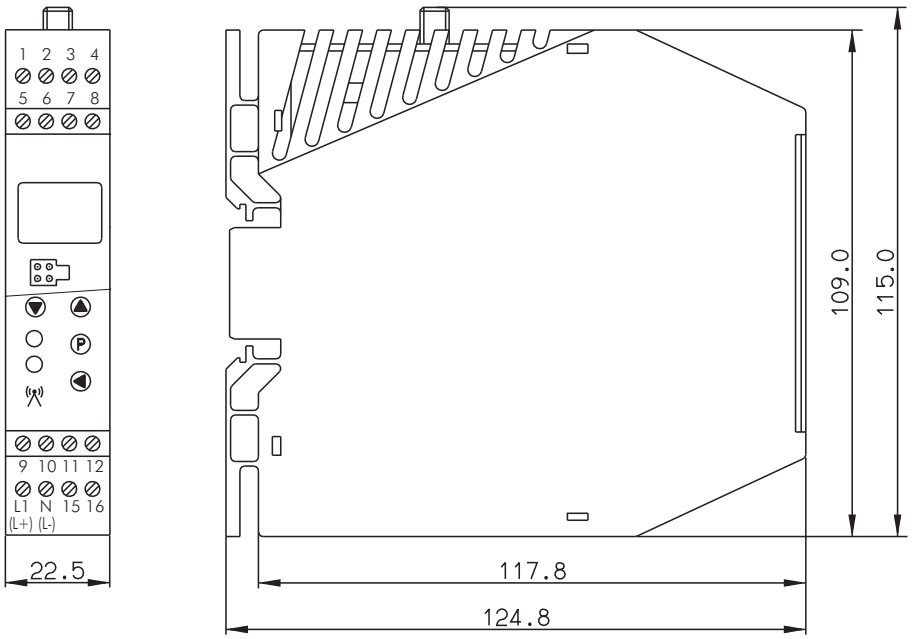

Basic type 902931/10 and 902931/30

JUMO GmbH & Co. KG
Delivery address: Mackenrodtstraße 14
36039 Fulda, Germany
Postal address: 36035 Fulda, Germany
Phone: +49 661 6003-0
Fax: +49 661 6003-607
E-mail: mail@jumo.net
Internet: www.jumo.net

JUMO Instrument Co. Ltd.
JUMO House
Temple Bank, Riverway
Harlow, Essex CM20 2DY, UK
Phone: +44 1279 635533
Fax: +44 1279 635262
E-mail: sales@jumo.co.uk
Internet: www.jumo.co.uk

JUMO Process Control, Inc.
6733 Myers Road
East Syracuse, NY 13057, USA
Phone: 315-437-5866
1-800-554-5866
Fax: 315-437-5860
E-mail: info.us@jumo.net
Internet: www.jumousa.com

Connection diagram

The connection diagram in the data sheet provides preliminary information about the connection options. For the electrical connection only use the installation instructions or the operating manual. The knowledge and the correct technical execution of the safety information/instructions contained in these documents are mandatory for mounting, electrical connection, startup, and for safety during operation.

Voltage supply

Connection for	Terminal assignment
Voltage supply according to nameplate: L1 and N at AC 110 to 240 V L+ and L- at AC/DC 20 to 30 V	L1 N (L+) (L-) L1 N (L+) (L-)

Outputs

Basic type 902931/10	Analog output 1	Analog output 2	Analog output 3	Analog output 4
Current 0(4) to 20 mA or voltage 0 to 10 V	1 2 + –	3 4 + –	5 6 + –	7 8 + –
Basic type 902931/30	Relay output 1	Relay output 2	Analog output 3	Analog output 4
Current 0(4) to 20 mA or voltage 0 to 10 V			5 6 + –	7 8 + –
Relay N/O contact, configurable as an N/C	1 2	3 4		

Digital interface

RS485	9 10 11	9 TxD+/RxD+ 10 GND 11 TxD-/RxD-	Transmission/received data + Ground Transmission/received data -

JUMO GmbH & Co. KG
Delivery address: Mackenrodtstraße 14
36039 Fulda, Germany
Postal address: 36035 Fulda, Germany
Phone: +49 661 6003-0
Fax: +49 661 6003-607
E-mail: mail@jumo.net
Internet: www.jumo.net

JUMO Instrument Co. Ltd.
JUMO House
Temple Bank, Riverway
Harlow, Essex CM20 2DY, UK
Phone: +44 1279 635533
Fax: +44 1279 635262
E-mail: sales@jumo.co.uk
Internet: www.jumo.co.uk

JUMO Process Control, Inc.
6733 Myers Road
East Syracuse, NY 13057, USA
Phone: 315-437-5866
1-800-554-5866
Fax: 315-437-5860
E-mail: info.us@jumo.net
Internet: www.jumousa.com

Order details

			(1)	**Basic type**
		902931/10		Wtrans receiver T01.EC1 C rail case, protection type IP20, 4 analog outputs 0(4) to 20 mA or 0 to 10 V, RS485 interface with Modbus protocol
		902931/30		Wtrans receiver T01.EC3 C rail case, protection type IP20, 2 analog outputs 0(4) to 20 mA or 0 to 10 V and 2 relay outputs AC 230 V/5 A potential free, RS485 interface with Modbus protocol
			(2)	**Version**
x	x	8		Standard with default settings
x	x	9		Customer-specific configuration (specifications in plain text)
			(3)	**Radio frequency**
x	x	10		868.4 MHz (Europe)
x		20		915 MHz (America, Australia, Canada, and New Zealand) (not in connection with AC/DC 20 to 30 V) In the 915 MHz frequency band, ten frequencies are configurable
			(4)	**Voltage supply**
x	x	23		AC 110 to 240 V +10/-15 %, 48 to 63 Hz
x	x	25		AC/DC 20 to 30 V, 48 to 63 Hz
			(5)	**Extra code**
x	x	000		None

	(1)		(2)		(3)		(4)		(5)
Order code		-		-		-		/	
Order example	902931/10	-	8	-	10	-	23	/	000

Scope of delivery

1 device in the ordered version
1 lambda/4-antenna, impedance 50 ohm, 868.4 MHz, $T_{max.}$ 125 °C or
1 lambda/4-antenna, impedance 50 ohm, 915 MHz, $T_{max.}$ 125 °C
1 operating manual B 902931.0

Accessories

Item	Part no.
Setup program on CD-ROM, multilingual[a]	00488887
Setup program incl. OnlineChart on CD-ROM, multilingual[a]	00549067
OnlineChart activation	00549188
Additional lambda/4-antenna, impedance 50 ohm, 868.4 MHz, $T_{max.}$ 125 °C	00503151
Additional lambda/4-antenna, impedance 50 ohm, 915 MHz, $T_{max.}$ 125 °C	00503152
Antenna holder for wall mounting with antipole for lambda/4-antenna	00482648
Lambda/4-antenna with waterproof line permanently connected, length 10 m, 868.4 MHz, $T_{max.}$ 125 °C	00523293
Lambda/4-antenna with waterproof line permanently connected, length 20 m, 868.4 MHz, $T_{max.}$ 125 °C	00523294
Antenna cable, length 3 m, impedance 50 ohm with preconfigured screw-type connection, $T_{max.}$ 85 °C	00482646
Antenna cable, length 5 m, impedance 50 ohm with preconfigured screw-type connection, $T_{max.}$ 85 °C	00490066
Antenna cable, length 10 m, impedance 50 ohm with preconfigured screw-type connection, $T_{max.}$ 85 °C	00490068
Antenna cable, length 10 m, impedance 50 ohm with preconfigured screw-type connection, $T_{max.}$ 125 °C	00511870
PC interface with USB/TTL converter, adapter (socket), and adapter (pins)	00456352

JUMO GmbH & Co. KG
Delivery address: Mackenrodtstraße 14
36039 Fulda, Germany
Postal address: 36035 Fulda, Germany
Phone: +49 661 6003-0
Fax: +49 661 6003-607
E-mail: mail@jumo.net
Internet: www.jumo.net

JUMO Instrument Co. Ltd.
JUMO House
Temple Bank, Riverway
Harlow, Essex CM20 2DY, UK
Phone: +44 1279 635533
Fax: +44 1279 635262
E-mail: sales@jumo.co.uk
Internet: www.jumo.co.uk

JUMO Process Control, Inc.
6733 Myers Road
East Syracuse, NY 13057, USA
Phone: 315-437-5866
1-800-554-5866
Fax: 315-437-5860
E-mail: info.us@jumo.net
Internet: www.jumousa.com

Item	Part no.
Plug-in power supply unit for interface converter (serial)	00365933
Interface converter I-7520A – RS232 to RS422/485	00376969
Interface card MOXA CP-132i – 2 × RS422/485	00397804
Plant visualization software JUMO SVS3000 (data sheet 700755)	-
Paperless recorder JUMO LOGOSCREEN nt (data sheet 706581)	-

[a] Configuration using a laptop/PC is only possible with an interface (PC interface with USB/TTL convertor or RS485) and one of the two setup programs.

JUMO Wtrans series

Type	Description	Data sheet
JUMO Wtrans receiver	Universal receiver for JUMO wireless measuring probes (voltage supply AC 110 to 240 V or AC/DC 20 to 30 V)	902931
JUMO Wtrans T	Transmitter RTD temperature probe with wireless data transmission (for universal receivers as of software version 01.01) As insertion or mineral-insulated RTD temperature probe for various ambient and operating temperatures with fixed and flexible protection tubes with plug connector M12 × 1 for RTD temperature probes with plug connector M12 × 1 for RTD temperature probes with connecting cable with ATEX approval	902930
JUMO Wtrans E01	Transmitter Measuring probe for humidity, temperature, and CO_2 with wireless data transmission (for universal receivers as of software version 05.01)	902928
JUMO Wtrans B	Transmitter Programmable head transmitter with wireless data transmission (for universal receivers as of software version 03.01)	707060
JUMO Wtrans p	Transmitter Pressure transmitter with wireless data transmission (for universal receivers as of software version 04.01)	402060

Stock versions

Order code	Part no.
902931/10-8-10-23/000	00543004
902931/10-8-20-23/000	00543032
902931/10-8-10-25/000	00543005
902931/30-8-10-23/000	00543006
902931/30-8-10-25/000	00543007

JUMO GmbH & Co. KG
Delivery address: Mackenrodtstraße 14
36039 Fulda, Germany
Postal address: 36035 Fulda, Germany
Phone: +49 661 6003-0
Fax: +49 661 6003-607
Email: mail@jumo.net
Internet: www.jumo.net

JUMO Instrument Co. Ltd.
JUMO House
Temple Bank, Riverway
Harlow, Essex, CM20 2DY, UK
Phone: +44 1279 63 55 33
Fax: +44 1279 62 50 29
Email: sales@jumo.co.uk
Internet: www.jumo.co.uk

JUMO Process Control, Inc.
6733 Myers Road
East Syracuse, NY 13057, USA
Phone: +1 315 437 5866
Fax: +1 315 437 5860
Email: info.us@jumo.net
Internet: www.jumousa.com

JUMO DELOS T

Electronic temperature switch with display and analog output

Application

- Food and pharmaceutical
- CIP/SIP plants
- Mechanical and plant engineering
- Air conditioning and refrigeration applications

Brief description

The highly-precise, electronic temperature switch consists of a protection tube with built-in temperature sensor, a process connection, and attached housing with LCD display for the electronics. Depending on the application, the following output variants are available: 1× PNP or 2× PNP switching output (binary output) or 1× PNP switching output and 1× analog output. The configuration of the output signal and the measuring range can be customized. Depending on the version, the electronic temperature switch can be used in an operating temperature range from -50 to +150 °C, -50 to +260 °C, and -50 to +500 °C. The analog output signal 4 to 20 mA, 0 to 20 mA, 0 to 10 V or reversed 20 to 4 mA, 20 to 0 mA, and 10 to 0 V is available in a linearized fashion (temperature linear). The electronic temperature switch is designed for industrial use and complies with the European standards to guarantee electromagnetic compatibility (EMC).

Note: also available as JUMO DELOS SI and HP – precision pressure transmitter with switching contacts and display, see data sheet 405052 and data sheet 405054.

Basic type 902940/10

Block diagram

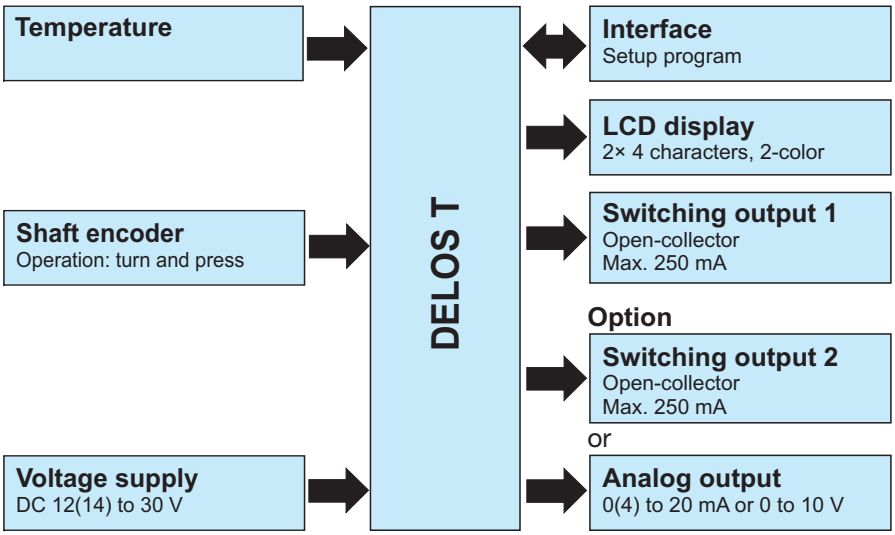

Special features

- For temperatures from -50 to +260 °C (500 °C)
- Hygienic process connection
- Configuration performed with the rotary encoder on the temperature switch or setup program
- M12 × 1 plug connection;
  protection type IP67 according to DIN EN 60529
  with pushed in machine connector
- Positively lit LCD display

JUMO GmbH & Co. KG
Delivery address: Mackenrodtstraße 14
36039 Fulda, Germany
Postal address: 36035 Fulda, Germany
Phone: +49 661 6003-0
Fax: +49 661 6003-607
Email: mail@jumo.net
Internet: www.jumo.net

JUMO Instrument Co. Ltd.
JUMO House
Temple Bank, Riverway
Harlow, Essex, CM20 2DY, UK
Phone: +44 1279 63 55 33
Fax: +44 1279 62 50 29
Email: sales@jumo.co.uk
Internet: www.jumo.co.uk

JUMO Process Control, Inc.
6733 Myers Road
East Syracuse, NY 13057, USA
Phone: +1 315 437 5866
Fax: +1 315 437 5860
Email: info.us@jumo.net
Internet: www.jumousa.com

Technical data

Electrical connection	Machine connector M12 × 1, 4-pole according to IEC 60947-5-2
Process connections	Screw connection G 1/4, G 3/8 and G 1/2 Screw connection M12 × 1.5; M14 × 1; M18 × 1.5 and M20 × 1.5 Screw connection 1/2-14NPT Union nut G 3/8 Compression fitting G 1/4 and G 1/2 Screw connection G 1/2 with CIP-compliant conical seal Taper socket with union nut (dairy pipe fitting) Clamping socket (clamp) Ball welding socket with threaded fitting Welding socket with CIP-compliant conical seal VARIVENT® connection[a] JUMO PEKA hygienic process connection
Protection tube	Stainless steel 316 L, material-no. 1.4404/1.4435 Stainless steel 316 Ti, material-no. 1.4751
Protection type	IP67 acc. to DIN EN 60529 with the pushed in machine connector
Response time	$t_{0.5}$: 3 s in water, flow velocity 0.4 m/s $t_{0.9}$: 8 s in water, flow velocity 0.4 m/s
Measuring insert	Pt1000 temperature sensor, DIN EN 60751, class A or AA, four-wire circuit

[a] VARIVENT® is a registered trademark of GEA Tuchenhagen.

General information

Reference conditions	DIN 16086 and DIN EN 60770
Display	Positively lit LCD display
Alignment	The display can be mirror-imaged by 180° using the setup program After installation, the display case can be swiveled to the left or right by ±160° (use the combination tool)
Size	Display 16 × 26 mm, font size 7 mm, 2× 4-digit
Color	Amber
Switching status display	K1, K2
Temperature unit	°C or °F
Operation	
On the device	With the rotary encoder beneath the sealing screw with combination tool or screwdriver 0.5 × 3 mm or Allen key with width across flats SW 2
With PC	Via the setup program with PC interface

Input

Measurement input (sensor)	1× Pt1000 temperature sensor, four-wire circuit
Attenuation	0.00 to 99.99 s
Measuring range	
Basic type 902940/10	-50 to +150 °C
Basic type 902940/30	-50 to +260 °C
Basic type 902940/40	-50 to +260 °C
Basic type 902940/50	-50 to +500 °C
Limit deviations	0.15 + 0.002 × |t|[a], class A (standard) 0.10 + 0.0017 × |t|[a], class AA

[a] |t| is the numerical value of the temperature in °C regardless of the prefix sign.

JUMO GmbH & Co. KG
Delivery address: Mackenrodtstraße 14
36039 Fulda, Germany
Postal address: 36035 Fulda, Germany
Phone: +49 661 6003-0
Fax: +49 661 6003-607
Email: mail@jumo.net
Internet: www.jumo.net

JUMO Instrument Co. Ltd.
JUMO House
Temple Bank, Riverway
Harlow, Essex, CM20 2DY, UK
Phone: +44 1279 63 55 33
Fax: +44 1279 62 50 29
Email: sales@jumo.co.uk
Internet: www.jumo.co.uk

JUMO Process Control, Inc.
6733 Myers Road
East Syracuse, NY 13057, USA
Phone: +1 315 437 5866
Fax: +1 315 437 5860
Email: info.us@jumo.net
Internet: www.jumousa.com

Measuring circuit monitoring

Probe short circuit, probe/cable break, underrange, overrange	Analog output 0 to 20 mA, 0 mA or 22 mA user configurable Analog output 4 to 20 mA, 3.4 mA or 22 mA user configurable Analog output 0 to 10 V, 0 V or 10.7 V user configurable Switching outputs, low Additional error message via the LCD display

Outputs

All analog outputs in three-wire circuit, open collector, PNP switching output

Analog output	
User configurable	4 to 20 mA and 1× PNP switching output 0 to 20 mA and 1× PNP switching output 0 to 10 V and 1× PNP switching output
Switching output	
Number	1× PNP switching output 2× PNP switching output
Switching type	N/C contact / N/O contact
Switching function	Window/hysteresis
Contact rating	
Voltage drop from U_B	PNP ≤ 2 V
Switching capacity	On ≤ 250 mA; off ≤ 1 mA
Switching cycles	> 10 million
Response time	
At 50 Hz	≤ 200 ms
At 60 Hz	≤ 320 ms
Short-circuit proof	Yes
Load check, current	
Pulse period	2 s; T_{ON} 40 ms
Periodic protective circuit for overcurrent	f = 0.5 Hz LCD display: Err3 switching output K1, Err4 switching output K2
Scaling range	
Analog output	Scaling can be freely selected within the measuring range
Behavior when leaving the scaling area (underrange)	Analog output 0 to 20 mA, linear drop up to 0 mA Analog output 4 to 20 mA, linear drop up to 3.8 mA Analog output 0 to 10 V, linear drop up to 0 V
Behavior when leaving the scaling area (overrange)	Analog output 0 to 20 mA, linear rise up to 20.5 mA Analog output 4 to 20 mA, linear rise up to 20.5 mA Analog output 0 to 10 V, linear rise up to 10.2 V
Switching output	
Switching point	Measuring range (> release point)
Release point	Measuring range (< switching point)
Switching delay	0.00 to 99.99 s
Burden	
4 to 20 mA	$R_l \geq (U_B - 6.5\ V) \div 0.022\ A$
0 to 20 mA	$R_l \geq (U_B - 6.5\ V) \div 0.022\ A$
0 to 10 V	$R \geq 10\ k\Omega$

JUMO GmbH & Co. KG
Delivery address: Mackenrodtstraße 14
36039 Fulda, Germany
Postal address: 36035 Fulda, Germany
Phone: +49 661 6003-0
Fax: +49 661 6003-607
Email: mail@jumo.net
Internet: www.jumo.net

JUMO Instrument Co. Ltd.
JUMO House
Temple Bank, Riverway
Harlow, Essex, CM20 2DY, UK
Phone: +44 1279 63 55 33
Fax: +44 1279 62 50 29
Email: sales@jumo.co.uk
Internet: www.jumo.co.uk

JUMO Process Control, Inc.
6733 Myers Road
East Syracuse, NY 13057, USA
Phone: +1 315 437 5866
Fax: +1 315 437 5860
Email: info.us@jumo.net
Internet: www.jumousa.com

Environmental influences

Admissible temperatures	
Ambient temperature, display case	-25 to +75 °C
Ambient temperature	-50 °C; restricted function only stationary use, risk of cable break, LCD display without function
Storage temperature	-40 to +85 °C
Admissible humidity	
During operation	100 % including condensation on the device outer case
In storage	90 % without condensation
Admissible mechanical load	Referring to basic type 902940/10, 902940/30 and 902940/40 with insertion length 100 mm
Vibration resistance	10 g, 10 to 2000 Hz according to IEC 60068-2-6
Shock resistance	50 g for 11 ms / 100 g for 1 ms according to IEC 60068-2-27
Electromagnetic compatibility	(Only with 4-pole connecting cable and grounded housing)
Interference emission	Class A according to EN 61326
Interference immunity	Performance characteristic A according to EN 61326
Protection type	IP67 according to DIN EN 60529
Ambient temperature influence	≤ ±(15 ppm/K × (measuring range end value + 200) + 50 ppm/K × configured measuring range) × $\Delta\vartheta$ $\Delta\vartheta$ = deviation of the ambient temperature from the reference temperature
Calibration/reference conditions	DC 24 V at 25 °C ±5 °C (77 °F ±9 °F)

Accuracy of entire device

Measured value	Tolerance
100 °C	0.60 K
150 °C	0.75 K
200 °C	1.00 K
450 °C	1.60 K

Auxiliary energy

Voltage supply	DC 12 to 30 V (nominal voltage supply DC 24 V) Residual ripple: ensure that the voltage peaks do **not** exceed or fall below the specified values for the voltage supply
For output 0(4) to 20 mA	DC 12 to 30 V
For output 0 to 10 V	DC 14 to 30 V
Reverse voltage protection	Yes
Power consumption	≤ 45 mA without load, ≤ 545 mA with load 2× PNP switching output
Electrical connection	Machine connector M12 × 1, 4-pole according to IEC 60947-5-2, A-coded
Electrical circuit	SELV
Influence of the voltage supply	≤ ±0.01 % per V deviation from DC 24 V[a]

[a] %-specifications refer to the measuring range end value of 20 mA/10 V.

JUMO GmbH & Co. KG
Delivery address: Mackenrodtstraße 14
36039 Fulda, Germany
Postal address: 36035 Fulda, Germany
Phone: +49 661 6003-0
Fax: +49 661 6003-607
Email: mail@jumo.net
Internet: www.jumo.net

JUMO Instrument Co. Ltd.
JUMO House
Temple Bank, Riverway
Harlow, Essex, CM20 2DY, UK
Phone: +44 1279 63 55 33
Fax: +44 1279 62 50 29
Email: sales@jumo.co.uk
Internet: www.jumo.co.uk

JUMO Process Control, Inc.
6733 Myers Road
East Syracuse, NY 13057, USA
Phone: +1 315 437 5866
Fax: +1 315 437 5860
Email: info.us@jumo.net
Internet: www.jumousa.com

Connection diagram

The connection diagram in the data sheet provides preliminary information about the connection options. For the electrical connection, only use the installation instructions or the operating manual. The knowledge and the correct technical compliance with the safety information and warnings contained in these documents are mandatory for mounting, electrical connection, and startup as well as for safety during operation.

Order code 470		**Order code 471**		**Order codes 475, 476, and 477**	
1× PNP switching output		2× PNP switching output		1× PNP switching output and 1× analog output	
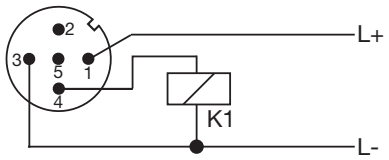		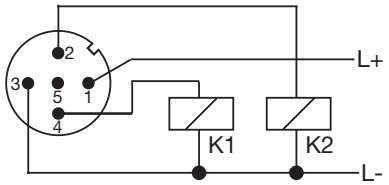		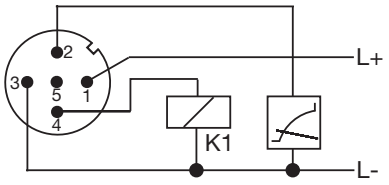	
Voltage supply		Voltage supply		Voltage supply	
1 L+	DC 12 to 30 V	1 L+	DC 12 to 30 V	1 L+	DC 12(14) to 30 V
3 L-	GND	3 L-	GND	3 L-	GND
Output		Output		Output	
4 K1	Highside open collector max. 0.25 A	2 K2	Highside open collector max. 0.25 A	2 analog	0(4) to 20 mA/0 to 10 V
2	nc	4 K1		4 K1	Highside open collector max. 0.25 A
5	Interface	5	Interface	5	Interface

The connection is located on the rear of the temperature switch!

Color coding: connecting cable round plug M12 × 1		
	1 BN	Brown
	2 WH	White
	3 BU	Blue
	4 BK	Black
	5 GY	Grey
The color coding is **only** for A-coded standard cables!		

Connection diagram (sensor)

Machine connector M12 × 1, 4-pole according to IEC 60947-5-2	**Electrical connection**	**Terminal assignment**
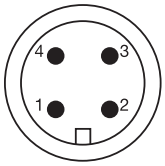	**Basic type 902940/50**	
	RTD temperature probe in four-wire circuit (input)	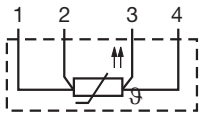

Top view of the machine connector at the corresponding RTD temperature probe!

JUMO GmbH & Co. KG
Delivery address: Mackenrodtstraße 14
36039 Fulda, Germany
Postal address: 36035 Fulda, Germany
Phone: +49 661 6003-0
Fax: +49 661 6003-607
Email: mail@jumo.net
Internet: www.jumo.net

JUMO Instrument Co. Ltd.
JUMO House
Temple Bank, Riverway
Harlow, Essex, CM20 2DY, UK
Phone: +44 1279 63 55 33
Fax: +44 1279 62 50 29
Email: sales@jumo.co.uk
Internet: www.jumo.co.uk

JUMO Process Control, Inc.
6733 Myers Road
East Syracuse, NY 13057, USA
Phone: +1 315 437 5866
Fax: +1 315 437 5860
Email: info.us@jumo.net
Internet: www.jumousa.com

Dimensions

Basic types

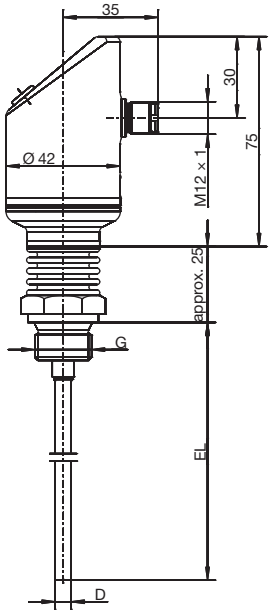

Basic type 902940/10

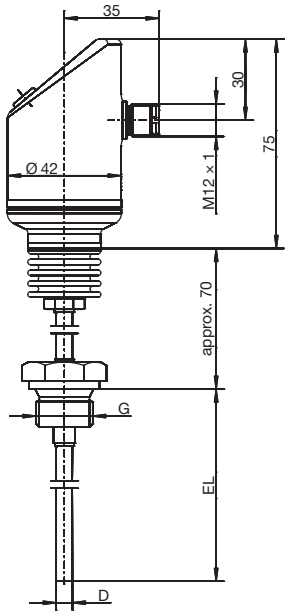

Basic type 902940/30
with extension tube

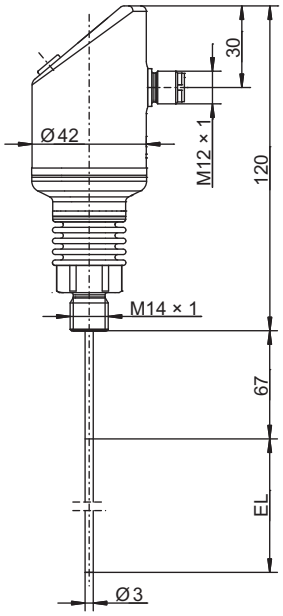

Basic type 902940/40
with adaption system for thermowell
902812/10

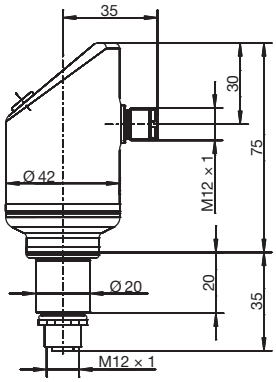

Basic type 902940/50
with M12 × 1 plug connection
for RTD temperature probes

JUMO GmbH & Co. KG
Delivery address: Mackenrodtstraße 14
36039 Fulda, Germany
Postal address: 36035 Fulda, Germany
Phone: +49 661 6003-0
Fax: +49 661 6003-607
Email: mail@jumo.net
Internet: www.jumo.net

JUMO Instrument Co. Ltd.
JUMO House
Temple Bank, Riverway
Harlow, Essex, CM20 2DY, UK
Phone: +44 1279 63 55 33
Fax: +44 1279 62 50 29
Email: sales@jumo.co.uk
Internet: www.jumo.co.uk

JUMO Process Control, Inc.
6733 Myers Road
East Syracuse, NY 13057, USA
Phone: +1 315 437 5866
Fax: +1 315 437 5860
Email: info.us@jumo.net
Internet: www.jumousa.com

Process connections PA

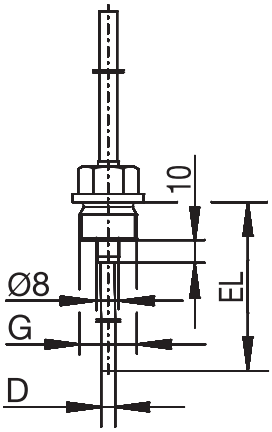

PA	G
103	3/8
104	1/2

Screw connection

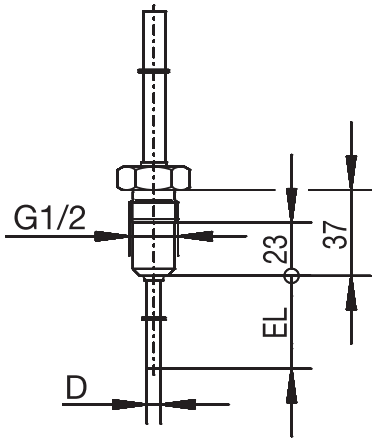

PA	
380	

Screw connection with CIP-compliant conical seal

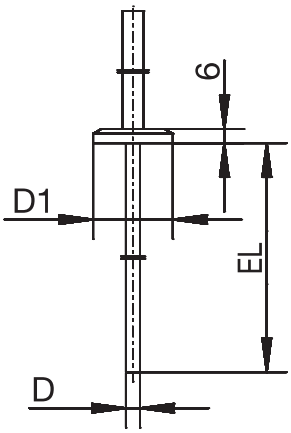

PA	DN	D1
-	-	Ø 25
611	10/20	Ø 34
613	25/1”	Ø 50.5

PA	DN	D1
613	40/1.5”	Ø 50.5
616	50/2”	Ø 64
617	2.5”	Ø 77.5

Clamping socket according to DIN 32676 (clamp)

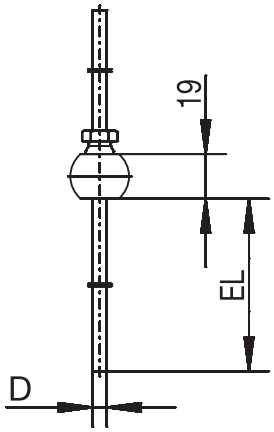

PA	
681	

Ball welding socket with threaded fitting

JUMO GmbH & Co. KG
Delivery address: Mackenrodtstraße 14
36039 Fulda, Germany
Postal address: 36035 Fulda, Germany
Phone: +49 661 6003-0
Fax: +49 661 6003-607
Email: mail@jumo.net
Internet: www.jumo.net

JUMO Instrument Co. Ltd.
JUMO House
Temple Bank, Riverway
Harlow, Essex, CM20 2DY, UK
Phone: +44 1279 63 55 33
Fax: +44 1279 62 50 29
Email: sales@jumo.co.uk
Internet: www.jumo.co.uk

JUMO Process Control, Inc.
6733 Myers Road
East Syracuse, NY 13057, USA
Phone: +1 315 437 5866
Fax: +1 315 437 5860
Email: info.us@jumo.net
Internet: www.jumousa.com

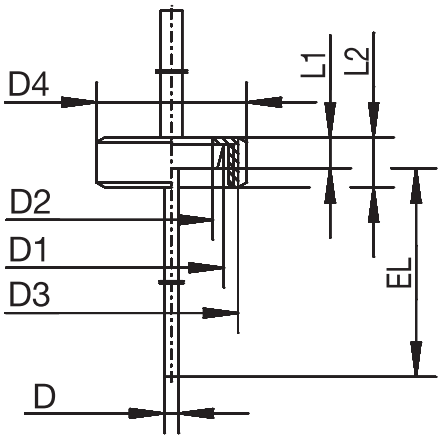

PA	DN	D1	D2	D3	D4	L1	L2
601	10	Ø 22	Ø 18	RD 28 × 1/8	Ø 38	9	18
604	25	Ø 44	Ø 35	RD 52 × 1/6	Ø 63	13	21
605	32	Ø 50	Ø 41	RD 58 × 1/6	Ø 70	13	21

Clamping socket with union nut acc. to DIN 11851 (dairy pipe fitting)

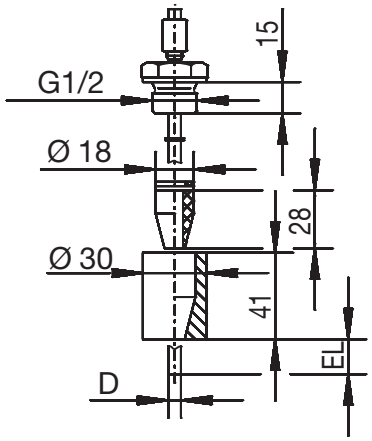

PA	
682	

Welding socket with CIP-compliant conical seal

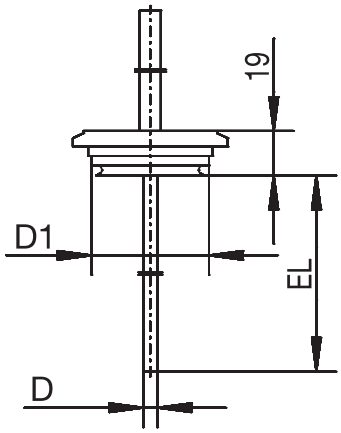

PA	DN	D1
684	15/10	Ø 31
685	32/25	Ø 50
686	50/40	Ø 68

VARIVENT® connection

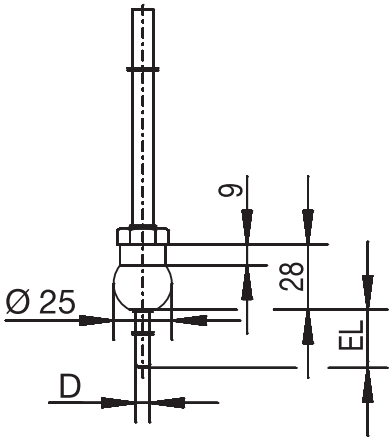

PA	
840	

Ball welding sleeve

JUMO GmbH & Co. KG
Delivery address: Mackenrodtstraße 14
36039 Fulda, Germany
Postal address: 36035 Fulda, Germany
Phone: +49 661 6003-0
Fax: +49 661 6003-607
Email: mail@jumo.net
Internet: www.jumo.net

JUMO Instrument Co. Ltd.
JUMO House
Temple Bank, Riverway
Harlow, Essex, CM20 2DY, UK
Phone: +44 1279 63 55 33
Fax: +44 1279 62 50 29
Email: sales@jumo.co.uk
Internet: www.jumo.co.uk

JUMO Process Control, Inc.
6733 Myers Road
East Syracuse, NY 13057, USA
Phone: +1 315 437 5866
Fax: +1 315 437 5860
Email: info.us@jumo.net
Internet: www.jumousa.com

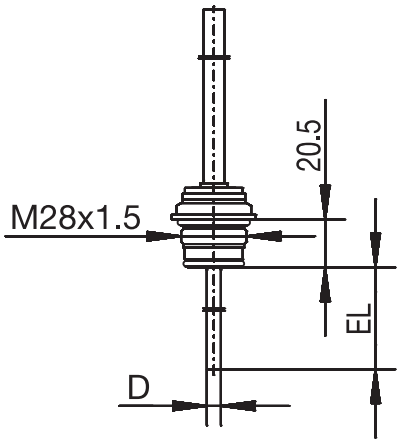

VARIVENT®	Clamp	Aseptic	Welding socket
DN 25/32	DN 25/32/40	DN 40	Ø 55 mm
DN 40-125	DN 50	DN 50	-
-	-	NKS DN 40	-

JUMO PEKA PA 997
Process connection adapter, data sheet 409711

JUMO GmbH & Co. KG
Delivery address: Mackenrodtstraße 14
36039 Fulda, Germany
Postal address: 36035 Fulda, Germany
Phone: +49 661 6003-0
Fax: +49 661 6003-607
Email: mail@jumo.net
Internet: www.jumo.net

JUMO Instrument Co. Ltd.
JUMO House
Temple Bank, Riverway
Harlow, Essex, CM20 2DY, UK
Phone: +44 1279 63 55 33
Fax: +44 1279 62 50 29
Email: sales@jumo.co.uk
Internet: www.jumo.co.uk

JUMO Process Control, Inc.
6733 Myers Road
East Syracuse, NY 13057, USA
Phone: +1 315 437 5866
Fax: +1 315 437 5860
Email: info.us@jumo.net
Internet: www.jumousa.com

Setup program

The setup program (accessories) is used to configure the temperature switch with a PC.
The configuration data can be archived and printed on the PC.

The setup program can be used to overwrite changed parameters with the factory setting at any time.
The connection between temperature switch and PC is established using a PC interface (USB/TTL converter) with adapter (USB connecting cable) and transmitter cable (Y cable).

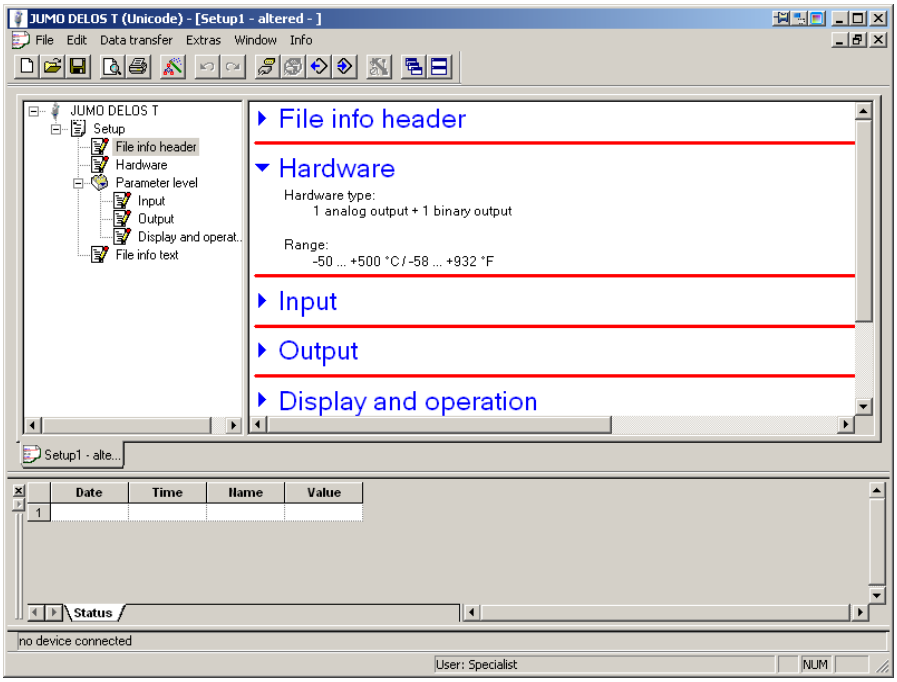

JUMO GmbH & Co. KG
Delivery address: Mackenrodtstraße 14
36039 Fulda, Germany
Postal address: 36035 Fulda, Germany
Phone: +49 661 6003-0
Fax: +49 661 6003-607
Email: mail@jumo.net
Internet: www.jumo.net

JUMO Instrument Co. Ltd.
JUMO House
Temple Bank, Riverway
Harlow, Essex, CM20 2DY, UK
Phone: +44 1279 63 55 33
Fax: +44 1279 62 50 29
Email: sales@jumo.co.uk
Internet: www.jumo.co.uk

JUMO Process Control, Inc.
6733 Myers Road
East Syracuse, NY 13057, USA
Phone: +1 315 437 5866
Fax: +1 315 437 5860
Email: info.us@jumo.net
Internet: www.jumousa.com

Order details

					(1)	**Basic type**[a]
				902940/10		DELOS T – Electronic temperature switch with display and analog output Parts coming into contact with the medium are electrolytically polished, surface roughness ≤ 0.8 µm
				902940/30		DELOS T – Electronic temperature switch with display and analog output with extension tube for higher medium temperatures Parts coming into contact with the medium are electrolytically polished, surface roughness ≤ 0.8 µm
				902940/40		DELOS T – Electronic temperature switch with display, analog output and adaption system for thermowell 902812/10[b] (please select associated thermowells in data sheet 902812)
				902940/50		DELOS T – Electronic temperature switch with display and analog output and M12 × 1 plug connection for RTD temperature probes
					(2)	**Version**
x	x	x	x	8		Standard with default settings
x	x	x	x	9		Customer-specific configuration (specification in plain text)
					(3)	**Operating temperature in °C**
x				370		-50 to +150 °C
	x	x		386		-50 to +260 °C
			x	408		-50 to +500 °C
					(4)	**Measuring insert**
x	x	x	x	1013		1 × Pt1000 in four-wire circuit
					(5)	**Tolerance class according to DIN EN 60751**
			x	0		Without (not relevant)
x	x	x		2		Class A (standard)
x	x	x		3		Class AA
					(6)	**Output**
x	x	x	x	470		1× PNP switching output
x	x	x	x	471		2× PNP switching output
x	x	x	x	475		1× PNP switching output and 1× analog output, 4 to 20 mA, user configurable
x	x	x	x	476		1× PNP switching output and 1× analog output, 0 to 20 mA, user configurable
x	x	x	x	477		1× PNP switching output and 1× analog output, 0 to 10 V, user configurable
					(7)	**Protection tube diameter D in mm**
			x	0		Without (not relevant)
		x		3		Ø 3 mm
x	x			6		Ø 6 mm
					(8)	**Insertion length EL in mm (50 to 1000 mm)**
			x	0		Without (not relevant)
x	x	x		50		50 mm
x	x	x		100		100 mm
x	x	x		150		150 mm
x	x			...		Specification in plain text (50 mm increments)
					(9)	**Process connection PA**
x	x		x	000		Without (smooth protection tube made out of stainless steel 316 L)

JUMO GmbH & Co. KG
Delivery address: Mackenrodtstraße 14
36039 Fulda, Germany
Postal address: 36035 Fulda, Germany
Phone: +49 661 6003-0
Fax: +49 661 6003-607
Email: mail@jumo.net
Internet: www.jumo.net

JUMO Instrument Co. Ltd.
JUMO House
Temple Bank, Riverway
Harlow, Essex, CM20 2DY, UK
Phone: +44 1279 63 55 33
Fax: +44 1279 62 50 29
Email: sales@jumo.co.uk
Internet: www.jumo.co.uk

JUMO Process Control, Inc.
6733 Myers Road
East Syracuse, NY 13057, USA
Phone: +1 315 437 5866
Fax: +1 315 437 5860
Email: info.us@jumo.net
Internet: www.jumousa.com

x	x				102	Screw connection G 1/4 (stainless steel 316 Ti)
x	x				103	Screw connection G 3/8 (stainless steel 316 Ti)
x	x				104	Screw connection G 1/2 (stainless steel 316 Ti)
x	x				118	Screw connection M12 × 1.5 (stainless steel 316 Ti)
		x			120	Screw connection M14 × 1 for adapting hygienic thermowells (stainless steel 316 L)
x	x				126	Screw connection M18 × 1.5 (stainless steel 316 Ti)
x	x				128	Screw connection M20 × 1.5 (stainless steel 316 Ti)
x	x				144	Screw connection 1/2-14NPT (stainless steel 316 Ti)
x	x				163	Union nut G 3/8 (stainless steel 316 Ti)
x	x				380	Screw connection G 1/2 with CIP-compliant conical seal (stainless steel 316 L)
x	x				601	Taper socket with union nut DN 10 DIN 11851 (dairy pipe fitting) (stainless steel 316 L)
x	x				604	Taper socket with union nut DN 25 DIN 11851 (dairy pipe fitting) (stainless steel 316 L)
x	x				605	Taper socket with union nut DN 32 DIN 11851 (dairy pipe fitting) (stainless steel 316 L)
	x				611	Clamping socket (clamp) DN 10/20 DIN 32676 (stainless steel 316 L)
x	x				613	Clamping socket (clamp) DN 25/40 (1“/1.5“) DIN 32676 (stainless steel 316 L)
x	x				616	Clamping socket (clamp) DN 50 (2“) DIN 32676 (stainless steel 316 L)
x	x				617	Clamping socket (clamp) 2.5“ similar to DIN 32676 (stainless steel 316 L)
x	x				681	Ball welding socket with threaded fitting (stainless steel 316 L)
x	x				682	Welding socket with CIP-compliant conical seal (stainless steel 316 L)
x	x				684	VARIVENT® connection DN 15/10 (stainless steel 316 L)
x	x				685	VARIVENT® connection DN 32/25 (stainless steel 316 L)
x	x				686	VARIVENT® connection DN 50/40 (stainless steel 316 L)
x	x				840	Ball welding sleeve (stainless steel 316 Ti)
x	x				997	JUMO PEKA hygienic process connection (stainless steel 316 L) (compatible process connection adapter, see data sheet 409711)
					(10)	**Extra codes**
x	x	x	x		000	None
x	x				310	Protection tube ∅ 6 mm stepped down to ∅ 3.8 mm (insertion length EL max. 800 mm)
x	x				810	Welding socket (only for process connection 380)

[a] This JUMO product is licensed under United States and Canadian patents. Purchasers of the JUMO product outside of the United States and Canada should advise JUMO of any planned sales of the product into the United States and Canada.

[b] The insertion length EL in mm must be identical for basic type 902940/40 with the selected hygienic thermowell 902812/10, data sheet 902812.

	(1)		(2)		(3)		(4)		(5)		(6)		(7)		(8)		(9)		(10)	
Order code		-		-		-		-		-		-		-		-		/		, ...[a]
Order example	902940/10	-	8	-	370	-	1013	-	2	-	475	-	6	-	50	-	104	/	000	

[a] List extra codes in sequence and separate using commas.

JUMO GmbH & Co. KG
Delivery address: Mackenrodtstraße 14
36039 Fulda, Germany
Postal address: 36035 Fulda, Germany
Phone: +49 661 6003-0
Fax: +49 661 6003-607
Email: mail@jumo.net
Internet: www.jumo.net

JUMO Instrument Co. Ltd.
JUMO House
Temple Bank, Riverway
Harlow, Essex, CM20 2DY, UK
Phone: +44 1279 63 55 33
Fax: +44 1279 62 50 29
Email: sales@jumo.co.uk
Internet: www.jumo.co.uk

JUMO Process Control, Inc.
6733 Myers Road
East Syracuse, NY 13057, USA
Phone: +1 315 437 5866
Fax: +1 315 437 5860
Email: info.us@jumo.net
Internet: www.jumousa.com

Scope of delivery

1 device in the ordered version
1 combination tool (required for operation on the device and after installation to turn the display case ±160° to the left or right)
1 operating manual

Accessories for process connection

Designation	Part no.
Compression fitting G 1/4 (stainless steel 316 Ti) for protection tube diameter 6 mm (only available for basic type 902940/10 and 902940/30)	00080811
Compression fitting G 1/2 (stainless steel 316 Ti) for protection tube diameter 6 mm (only available for basic type 902940/10 and 902940/30)	00305445

Accessories

Designation	Part no.
Setup program on CD-ROM, multilingual[a]	00550018
Transmitter cable (Y cable)[a]	00507861
PC interface with USB/TTL converter and adapter (USB connecting cable)[a]	00456352
Combination tool (required for operation on the device and after installation to turn the display case ±160° to the left or right)	00526614
Cable box, 4-pole (straight) M12 × 1 with PVC connecting cable length 2000 mm (can be used for assembly)	00404585
Cable box, 4-pole (angled) M12 × 1 with PVC connecting cable length 2000 mm (can be used for assembly)	00409334
Machine connector M12 × 1, 4 pole according to IEC 60947-5-2 (only available for basic type 902940/50)	00404727
Holder for wall mounting for temperature switch with M12 × 1 plug connection (only available for basic type 902940/50)	00555129
Push-in RTD temperature probe with Pt1000 temperature sensor and machine connector M12 × 1	
902150/99-386-1013-2-6-100-56-2500/315 Protection tube diameter 6 mm, insertion length 100 mm, connecting cable length 2500 mm (only available for basic type 902940/50)	00551310
902150/99-386-1013-2-6-200-56-2500/315 Protection tube diameter 6 mm, insertion length 200 mm, connecting cable length 2500 mm (only available for basic type 902940/50)	00551311

Note: for compression fittings and flanges refer to data sheet 909750

[a] The configuration with the setup program can only take place in conjunction with these accessory parts.

Stock versions

Order code	Part no.
902940/10-8-370-1013-2-475-6-50-104/000	00552544
902940/10-8-370-1013-2-475-6-100-104/000	00550991
902940/10-8-370-1013-2-475-6-150-104/000	00552545
902940/10-8-370-1013-2-475-6-200-104/000	00552547
902940/10-8-370-1013-2-475-6-150-000/000	00551003
902940/50-8-408-1013-0-475-0-000-000/000	00551004

JUMO GmbH & Co. KG
Delivery address: Mackenrodtstraße 14
36039 Fulda, Germany
Postal address: 36035 Fulda, Germany
Phone: +49 661 6003-0
Fax: +49 661 6003-607
Email: mail@jumo.net
Internet: www.jumo.net

JUMO Instrument Co. Ltd.
JUMO House
Temple Bank, Riverway
Harlow, Essex, CM20 2DY, UK
Phone: +44 1279 63 55 33
Fax: +44 1279 62 50 29
Email: sales@jumo.co.uk
Internet: www.jumo.co.uk

JUMO Process Control, Inc.
6733 Myers Road
East Syracuse, NY 13057, USA
Phone: +1 315 437 5866
Fax: +1 315 437 5860
Email: info.us@jumo.net
Internet: www.jumousa.com

JUMO plastoSENS T04

Surface-Optimized Plastic Temperature Probe

- For temperatures of -40 to +180 °C
- Precise pipe adaptation through full contact to surface area
- Simple and fast mounting without tools
- Heat-conductible plastic
- Water-tight, IP65

Basic type 904004/50

Brief description

Surface temperatures at pipes (made from copper or stainless steel, for example) can be recorded with the surface RTD temperature probe in order to make conclusions about the temperature of the medium within the pipe. The JUMO plastoSENS T04 units are designed such that they are a precise fit for a pipe diameter and thus enable full-area contact with the pipe. This allows for optimum heat transfer.
The supplied accessories provide good protection against environmental influences (such as drafts), in addition to the option of toolless mounting. The insulation cap is manufactured from a plastic that is a poor heat conductor here, in order to ensure the best possible isolation of the temperature probe. The pipe clip provides the option of fastening the temperature probe on a pipe together with the insulation cap without using tools. This results in a fixed and secure connection that can also be released if required.
A Pt1000 according to DIN EN 60751:2009 / IEC 60751:2008 of the tolerance class B (F0.3) in a two-wire circuit is used as a temperature sensor as standard. Versions with Pt100 or other temperature sensors are also possible.

JUMO GmbH & Co. KG
Delivery address: Mackenrodtstraße 14
36039 Fulda, Germany
Postal address: 36035 Fulda, Germany
Phone: +49 661 6003-0
Fax: +49 661 6003-607
Email: mail@jumo.net
Internet: www.jumo.net

JUMO Instrument Co. Ltd.
JUMO House
Temple Bank, Riverway
Harlow, Essex, CM20 2DY, UK
Phone: +44 1279 63 55 33
Fax: +44 1279 62 50 29
Email: sales@jumo.co.uk
Internet: www.jumo.co.uk

JUMO Process Control, Inc.
6733 Myers Road
East Syracuse, NY 13057, USA
Phone: +1 315 437 5866
Fax: +1 315 437 5860
Email: info.us@jumo.net
Internet: www.jumousa.com

Technical data

Dimensions of the temperature probe	Diameter: 8 mm Length: 40 mm Height: 5.5 mm
Fastening	Without accessories: e.g. cable ties, max. 5 mm wide With insulation cap: e.g. cable ties, max. 6 mm wide With insulation cap and pipe clip: no further accessories necessary
Protection type	IP65 according to DIN EN 60529
Response times	For pipe diameters up to 22 mm or 1": • $t_{0.5}$: < 5 s • $t_{0.63}$: < 6 s • $t_{0.9}$: < 15 s For pipe diameters from 22 mm or 1": • $t_{0.5}$: < 8 s • $t_{0.63}$: < 10 s • $t_{0.9}$: < 20 s
Connecting cable	Silicone, ambient temperature -40 to +180 °C
Connection	Cable ends with ferrules

Dimensions

Temperature sensor

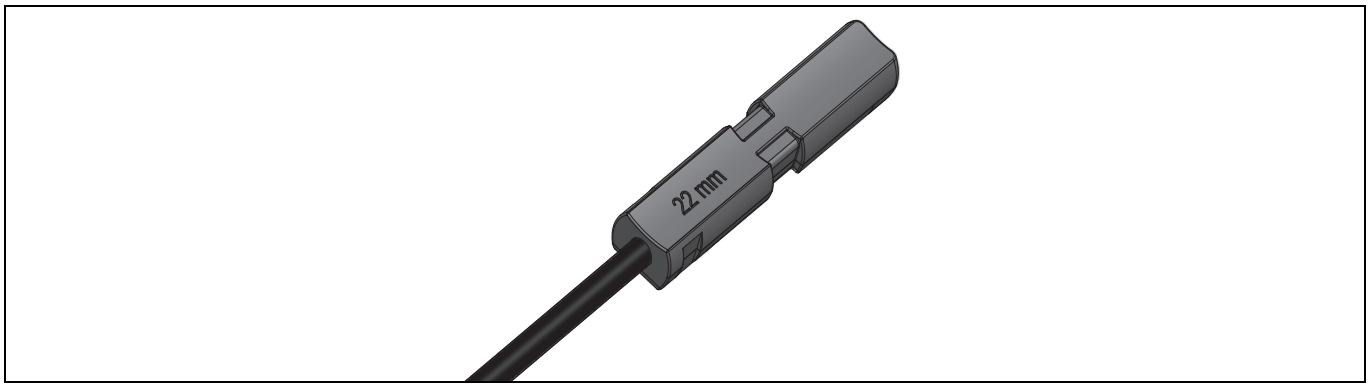

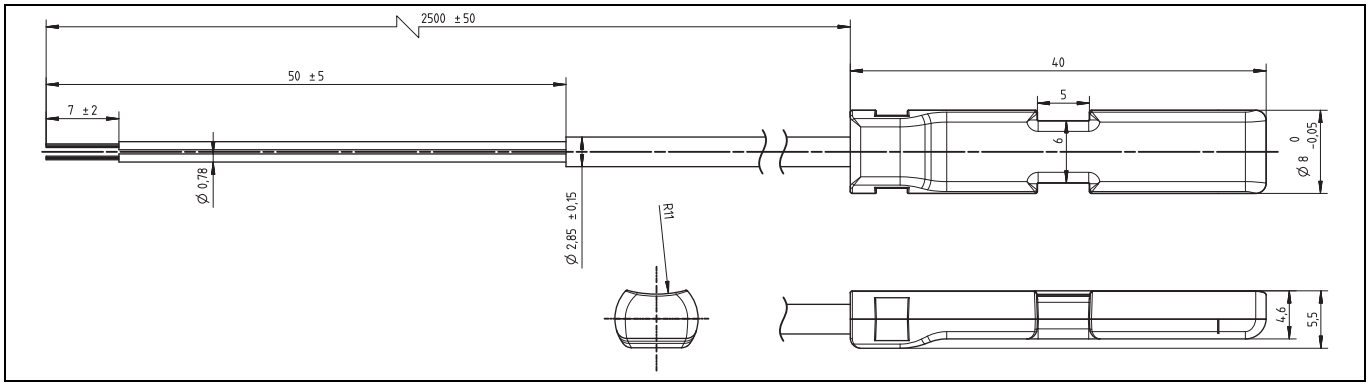

JUMO GmbH & Co. KG
Delivery address: Mackenrodtstraße 14
36039 Fulda, Germany
Postal address: 36035 Fulda, Germany
Phone: +49 661 6003-0
Fax: +49 661 6003-607
Email: mail@jumo.net
Internet: www.jumo.net

JUMO Instrument Co. Ltd.
JUMO House
Temple Bank, Riverway
Harlow, Essex, CM20 2DY, UK
Phone: +44 1279 63 55 33
Fax: +44 1279 62 50 29
Email: sales@jumo.co.uk
Internet: www.jumo.co.uk

JUMO Process Control, Inc.
6733 Myers Road
East Syracuse, NY 13057, USA
Phone: +1 315 437 5866
Fax: +1 315 437 5860
Email: info.us@jumo.net
Internet: www.jumousa.com

Insulation cap

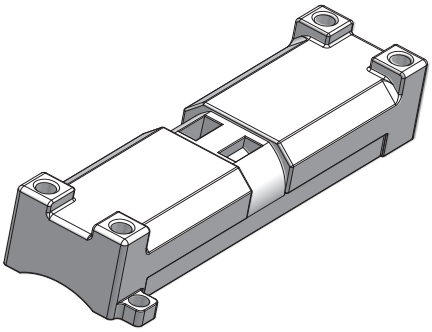

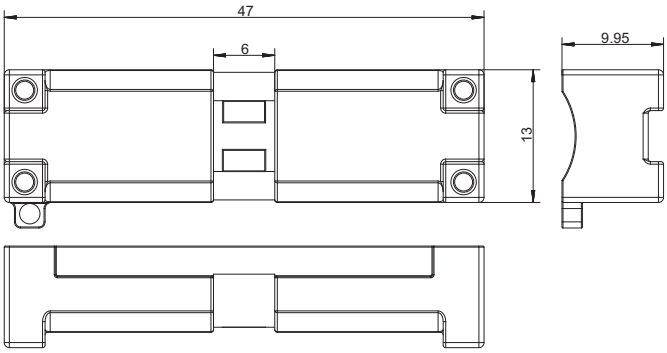

Pipe clip for pipe diameters of 22 mm (example); for additional pipe clips see accessories

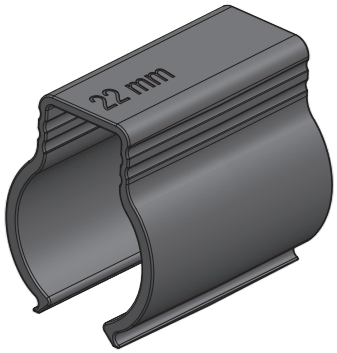

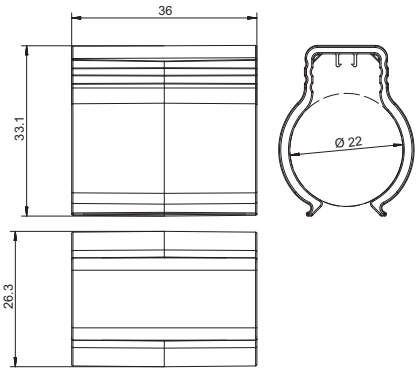

JUMO GmbH & Co. KG
Delivery address: Mackenrodtstraße 14
36039 Fulda, Germany
Postal address: 36035 Fulda, Germany
Phone: +49 661 6003-0
Fax: +49 661 6003-607
Email: mail@jumo.net
Internet: www.jumo.net

JUMO Instrument Co. Ltd.
JUMO House
Temple Bank, Riverway
Harlow, Essex, CM20 2DY, UK
Phone: +44 1279 63 55 33
Fax: +44 1279 62 50 29
Email: sales@jumo.co.uk
Internet: www.jumo.co.uk

JUMO Process Control, Inc.
6733 Myers Road
East Syracuse, NY 13057, USA
Phone: +1 315 437 5866
Fax: +1 315 437 5860
Email: info.us@jumo.net
Internet: www.jumousa.com

Order details

			(1)	**Basic type**
		904004/10		JUMO plastoSENS T04 Surface-optimized plastic temperature probe with insulation cap and pipe clip
		904004/50		JUMO plastoSENS T04 Surface-optimized plastic temperature probe without accessories
			(2)	**Operating temperature in °C**
x	x	485		-40 to +180 °C
			(3)	**Measuring insert**
x	x	1003		1× Pt100 in two-wire circuit
x	x	1005		1× Pt1000 in two-wire circuit (standard)
			(4)	**Tolerance class according to DIN EN 60751:2009 / IEC 60751:2008**
x	x	1		Class B (standard)
x	x	2		Class A
			(5)	**Surface shape**
x	x	008		For pipe diameters of 8 mm
x	x	010		For pipe diameters of 10 mm
x	x	012		For pipe diameters of 12 mm
x	x	014		For pipe diameters of 14 mm
x	x	015		For pipe diameters of 15 mm
x	x	016		For pipe diameters of 16 mm
x	x	018		For pipe diameters of 18 mm
x	x	019		For pipe diameters of 19 mm
x	x	020		For pipe diameters of 20 mm
x	x	022		For pipe diameters of 22 mm
x	x	028		For pipe diameters of 28 mm
x	x	030		For pipe diameters of 30 mm
x	x	032		For pipe diameters of 32 mm
x	x	035		For pipe diameters of 35 mm
x	x	040		For pipe diameters of 40 mm
x	x	042		For pipe diameters of 42 mm
x	x	138		For pipe diameters of 3/8"
x	x	158		For pipe diameters of 5/8"
x	x	114		For pipe diameters of 1/4"
x	x	112		For pipe diameters of 1/2"
x	x	134		For pipe diameters of 3/4"
x	x	110		For pipe diameters of 1"
x	x	120		For pipe diameters of 2"
			(6)	**Connecting cable end**
x	x	11		Ferrules
			(7)	**Connecting cable length AL in mm (AL 500 to 10000 mm)**
x	x	2500		2500 mm
		...		Specifications in plain text (increments of 500 mm)
			(8)	**Extra codes**
x	x	000		None

	(1)		(2)		(3)		(4)		(5)		(6)		(7)		(8)
Order code		-		-		-		-		-		-		/	
Order example	904004/10	-	485	-	1005	-	1	-	012	-	11	-	2500	/	000

JUMO GmbH & Co. KG
Delivery address: Mackenrodtstraße 14
36039 Fulda, Germany
Postal address: 36035 Fulda, Germany
Phone: +49 661 6003-0
Fax: +49 661 6003-607
Email: mail@jumo.net
Internet: www.jumo.net

JUMO Instrument Co. Ltd.
JUMO House
Temple Bank, Riverway
Harlow, Essex, CM20 2DY, UK
Phone: +44 1279 63 55 33
Fax: +44 1279 62 50 29
Email: sales@jumo.co.uk
Internet: www.jumo.co.uk

JUMO Process Control, Inc.
6733 Myers Road
East Syracuse, NY 13057, USA
Phone: +1 315 437 5866
Fax: +1 315 437 5860
Email: info.us@jumo.net
Internet: www.jumousa.com

Information about order details

Please note that not all feature combinations directly generate deliverable products. They merely describe production-based versions that are possible. Due to the special manufacturing conditions the minimum order quantity for non-standard versions is 500 pieces.

Please refer to the stock versions as a guideline. All other versions are available upon request.

Stock versions

Order code	Part no.
904004/10-485-1005-1-012-11-2500/000	00712003
904004/10-485-1005-1-016-11-2500/000	00712004
904004/10-485-1005-1-018-11-2500/000	00712005
904004/10-485-1005-1-022-11-2500/000	00712006
904004/10-485-1005-1-028-11-2500/000	00712007

Accessories

Designation	Part no.
Insulation cap	00712258
Pipe clip for pipe diameters of 8 mm	00712259
Pipe clip for pipe diameters of 10 mm	00712261
Pipe clip for pipe diameters of 12 mm	00712262
Pipe clip for pipe diameters of 14 mm	00712264
Pipe clip for pipe diameters of 15 mm	00712265
Pipe clip for pipe diameters of 16 mm	00712266
Pipe clip for pipe diameters of 18 mm	00712267
Pipe clip for pipe diameters of 19 mm	00712268
Pipe clip for pipe diameters of 20 mm	00712269
Pipe clip for pipe diameters of 22 mm	00712270
Pipe clip for pipe diameters of 28 mm	00712271
Pipe clip for pipe diameters of 30 mm	00712272
Pipe clip for pipe diameters of 32 mm	00712273
Pipe clip for pipe diameters of 35 mm	00712274
Pipe clip for pipe diameters of 40 mm	00712275
Pipe clip for pipe diameters of 42 mm	00712277
Pipe clip for pipe diameters of 3/8"	00712278
Pipe clip for pipe diameters of 5/8"	00712283
Pipe clip for pipe diameters of 1/4"	00712284
Pipe clip for pipe diameters of 1/2"	00712285
Pipe clip for pipe diameters of 3/4"	00712286
Pipe clip for pipe diameters of 1"	00712287
Pipe clip for pipe diameters of 2"	00712289

M. K. JUCHHEIM GmbH & Co
36035 Fulda, Germany
Phone (0661) 6003-0
Fax (0661) 6003-607
Telex 49701 juf d
email JUMO_de@e-mail.com

UK
Jumo Instrument Co. Ltd.
Temple Bank, Riverway
Harlow Essex CM20 2TT
Phone (01279) 635533
Fax (01279) 635262

USA
Jumo Process Control Inc.
735 Fox Chase
Coatesville, PA 19320
Phone 610-380-8002, 800-554 JUMO
Fax 610-380-8009

JUMO
MEASUREMENT AND CONTROL

The measurement of humidity in air

Introduction

Besides temperature, humidity is a very important process parameter. The relative humidity of the surrounding atmosphere, for example, has a far-reaching influence on our well-being and our health.

In industrial processes the correct adjustment of humidity is often decisive for the competitiveness and quality of the product. Correct adjustment of humidity level can also contribute to appreciable savings in energy consumption.

The list of applications in which the measurement of humidity is considered important can be extended indefinitely. Wherever the water vapour content of the air can produce or influence chemical, physical or biological processes it is very important to ensure that humidity is monitored continuously.

Concepts and physical laws

The composition of air

Clean and dry air contains the following constituents (in vol %):

78.10 % nitrogen
20.93 % oxygen
0.93 % argon
0.03 % carbon dioxide
0.01 % hydrogen

together with smaller amounts of neon, helium, krypton and xenon.

In addition to these constituents, indoor and outdoor air contains a number of gases and solids as well as a certain quantity of moisture in the form of water vapour. Air is therefore a homogeneous mixture of different gases and can be considered as an "ideal gas". Solar radiation and wind ensure uniform mixing of the gases involved so that there is no stratification despite the differences in specific gravity.

Dalton's Law P = P1 + P2 + ...

The total pressure of a gas mixture consists of the sum of the partial pressures of its constituents. Expressed in simple terms, air thus consists of dry air and water vapour.

$$P = P_W + P_{dry}$$

where P_w represents the partial pressure produced by water vapour and P_{dry} the sum of the partial pressures of all other gases.

Saturation water vapour pressure

Air is capable of absorbing and storing a certain quantity of water vapour depending on its temperature. This quantity increases with increasing temperature.

At any particular temperature the resulting water vapour pressure can only rise up to the saturation limit which is designated as the saturation water vapour pressure P_S.

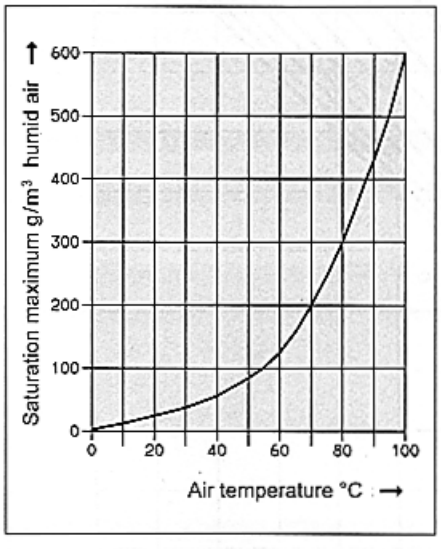

Fig. 1: The water vapour pressure curve indicates the saturation maximum of water vapour content in air at different temperatures

The atmospheric pressure and the presence of other gases or contaminants have no influence on the behaviour described above.

Dew point

The dew point temperature T_d is the temperature at which air is saturated with water vapour; further addition of water vapour or cooling of the air results in condensation. The excess water vapour condenses as rain, mist or condensate. The saturated state is maintained. The dew point temperature is equal to the water vapour saturation temperature and can be a maximum of 100 °C at normal pressure.

Measured parameters

The humidity content of air can be characterised by two parameters. We distinguish between relative humidity and absolute humidity.

Relative humidity

Relative humidity is defined as the ratio between the actual partial vapour pressure P_W in a gas and the maximum possible vapour pressure, i.e. the saturation vapour pressure P_S, at the particular temperature.

$$rH = \frac{P_W}{P_S\,(t)} \cdot 100 \quad [\%]$$

Relative humidity is a non-dimensional value. It represents a ratio and is specified in percent.

Since the saturation pressure depends only on the temperature of the air, it follows that relative humidity is also dependent on temperature. Relative humidity decreases with increasing temperature, and vice versa.

The influence of temperature variations on relative humidity can be very appreciable.

	10 °C	20 °C	30 °C	50 °C	70 °C
10 %rH	±0.7 %	±0.6 %	±0.6 %	±0.5 %	±0.5 %
50 %rH	±3.5 %	±3.2 %	±3.0 %	±2.6 %	±2.3 %
90 %rH	±6.3 %	±5.7 %	±5.4 %	±4.6 %	±4.1 %

Table 1: Influence of a temperature variation of ±1 °C at different temperatures and humidities

Absolute humidity

Absolute humidity a is the quantity of water vapour contained in a certain volume of air.

$$a = \frac{\text{mass of water vapour}}{\text{volume of air}}$$

The unit for absolute humidity is g/m³. Measurement of absolute humidity has the great advantage that it represents the quantity of water actually present in a gas, for example, independent of temperature.

Mixing ratio or water content (x)

This parameter indicates the ratio of the mass of water vapour to the mass of the dry gas. Commonly used units are g/kg dry air and %.

It specifies how many grammes of water vapour are contained in a kg of dry air. The determination of water content plays an important role in processing technology, since such data provide more valuable information than relative humidity.

M. K. JUCHHEIM
GmbH & Co

36035 Fulda, Germany
Phone (0661) 6003-0
Fax (0661) 6003-607
Telex 49701 juf d
email JUMO_de@e-mail.com

UK
Jumo Instrument Co. Ltd.
Temple Bank, Riverway
Harlow Essex CM20 2TT
Phone (01279) 635533
Fax (01279) 635262

USA
Jumo Process Control Inc.
735 Fox Chase
Coatesville, PA 19320
Phone 610-380-8002,
800-554 JUMO
Fax 610-380-8009

JUMO
MEASUREMENT AND CONTROL

There is a fixed relationship between the values of absolute and relative humidity, see Fig. 2.

The unit of absolute humidity can be selected to suit individual requirements.

The most common units are:

- dew point temperature °C
- mixture ratio $g/kg_{dry\ air}$
- absolute humidity g/m^3

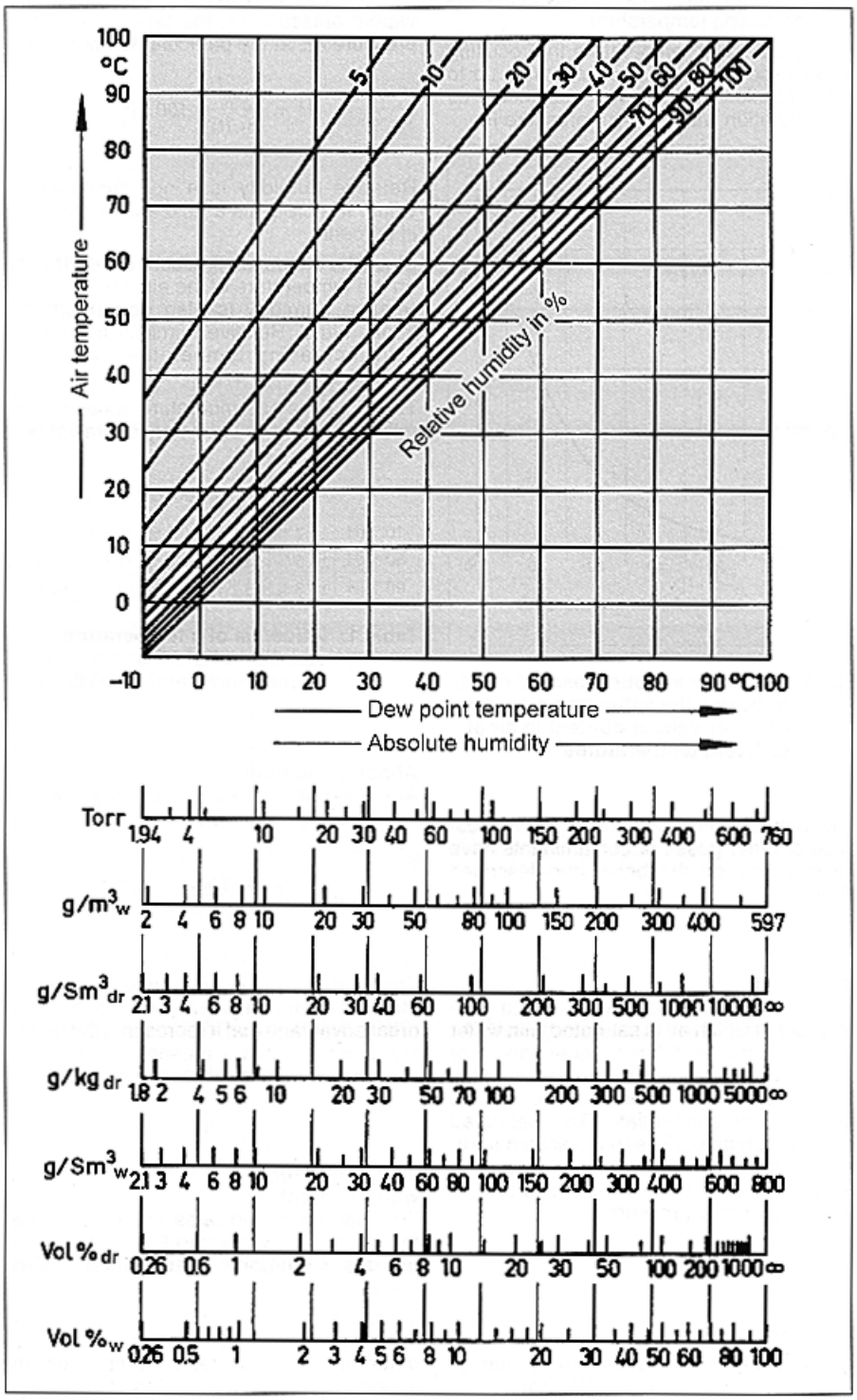

Fig. 2: Units of absolute humidity and their relation to relative humidity

M. K. JUCHHEIM GmbH & Co
36035 Fulda, Germany
Phone (0661) 6003-0
Fax (0661) 6003-607
Telex 49701 juf d
email JUMO_de@e-mail.com

UK
Jumo Instrument Co. Ltd.
Temple Bank, Riverway
Harlow Essex CM20 2TT
Phone (01279) 635533
Fax (01279) 635262

USA
Jumo Process Control Inc.
735 Fox Chase
Coatesville, PA 19320
Phone 610-380-8002,
800-554 JUMO
Fax 610-380-8009

JUMO
MEASUREMENT AND CONTROL

Relationship between temperature, moisture content and relative humidity
These relationships are shown in the i-x diagram (Mollier diagram, see Fig. 3).

Example for the use of the diagram:
a) Determining the water content x and the water vapour pressure e
Measured values: air temperature 28 °C
air humidity 60 % rH

Look up the measured values in the diagram and determine the point of intersection A. From this intersection draw a vertical line and extend it to the top and bottom edges of the diagram. The intersection with the top scale gives the water vapour pressure e = 17 mm Hg, at the bottom scale the water content x = 14 g/kg.

b) Evaluating the dew point temperature
Measured values: air temperature 28 °C
air humidity 60 % rH

Find the point of intersection A as under a). From the intersection A go down vertically to the maximum humidity line 100 % and from that point draw a horizontal line to the left-hand scale with the temperature graduation. The new intersection gives the required dew point temperature of 19.4 °C.

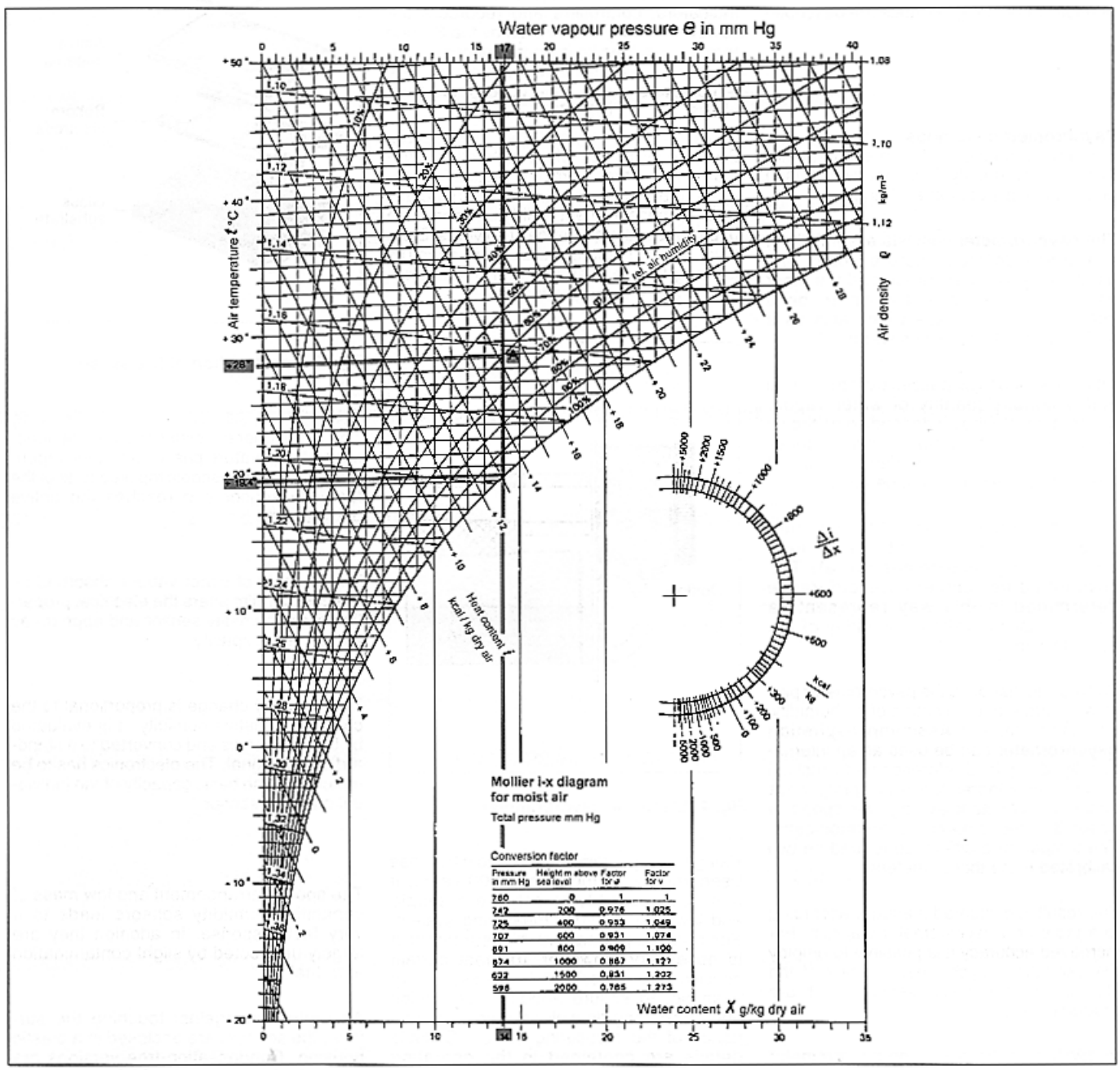

Fig. 3: Relationship between temperature, moisture content and relative humidity

M. K. JUCHHEIM GmbH & Co
36035 Fulda, Germany
Phone (0661) 6003-0
Fax (0661) 6003-607
Telex 49701 juf d
email JUMO_de@e-mail.com

UK
Jumo Instrument Co. Ltd.
Temple Bank, Riverway
Harlow Essex CM20 2TT
Phone (01279) 635533
Fax (01279) 635262

USA
Jumo Process Control Inc.
735 Fox Chase
Coatesville, PA 19320
Phone 610-380-8002,
800-554 JUMO
Fax 610-380-8009

Humidity measurement methods and their application

A number of different methods are used for measuring humidity in air. The choice of the most suitable method is usually made by the user based on the local situation. The use of a simple but correctly applied humidity measuring device often permits achieving a better accuracy or meeting the particular requirements.

In order to provide general assistance, some of the best known and widely used humidity measuring methods are described below.

Psychrometric methods

The psychrometric method measures relative humidity directly. This method is based on the principle of heat exchange.

The **psychrometer** consists essentially of two independent temperature probes, one used as the wet bulb probe and the other as the dry bulb probe. The wet probe is surrounded by a tissue which acts as a wick and is saturated with water.

An air flow has to be passed over this probe and a certain quantity of water vapour evaporates into the air depending on the air temperature and humidity. This produces a cooling effect at the surface of the wet thermometer (wet bulb temperature).

At the same time a second temperature probe measures the ambient air temperature (dry bulb temperature). The psychrometric temperature difference determined in this way represents a measure for the relative humidity of the surrounding air.

With careful handling the psychrometer permits accurate determination of air humidity. For example, the **Assmann aspiration psychrometer** can be used as an internationally recognised reference and checking device. An integral fan with spring drive ensures a constant average air speed of about 3 m/sec around the thermometers. The temperature difference is read on two calibrated glass thermometers.

The result is evaluated manually according to a table or a psychrometer diagram. For increased accuracy it is possible to employ the aspiration psychrometer tables of the German meteorological service which are graduated in 0.1 °C.

In addition to the aspiration psychrometer there are numerous different arrangements.

The field of application of most mechanical psychrometers with glass thermometers is restricted to the climatic range for temperatures up to 60 °C. The advantage of this type of instrument is that no electrical supply is required.

Electrical psychrometers have more extensive applications. Here the wet bulb and dry bulb temperatures are measured using Pt 100 resistance thermometers.

In the case of microprocessor-controlled indicators, controllers and recorders the relative humidity determined by the Sprung formula can then be indicated or processed directly, using a suitable input circuit. The temperature range covered extends from almost 0 °C to 100 °C.

Because of its reliable construction compared with other humidity measuring devices, the psychrometric method generally permits measurement in dirty and corrosive gases and in the presence of solvents. Electrical psychrometers are used for example for long-term measurement in meat processing and cheese production.

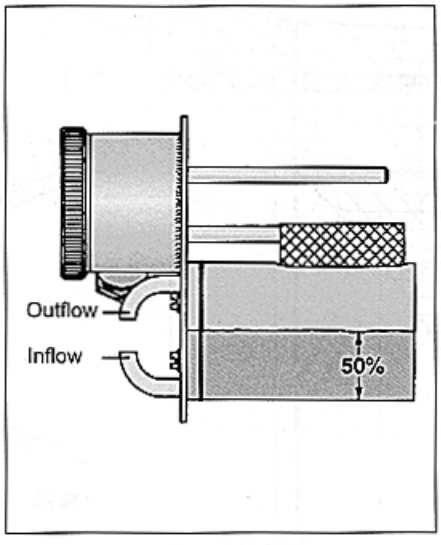

Fig. 4: Electrical psychrometer

Using the psychrometric method which has been known for more than 100 years, it has been possible to achieve a simple and low-cost humidity measuring system. For reliable permanent measurement it is necessary, however, to meet certain specific user criteria. It is necessary, for example, to ensure adequate ventilation and moistening as well as proper maintenance of the measuring device. Suitable details are contained in the operating instructions and method descriptions of the individual instruments.

Capacitive method

The capacitive method is based generally on the condenser principle. The function of the humidity sensor depends on the change of capacity of a thin polymer film through the absorption or removal of water molecules.

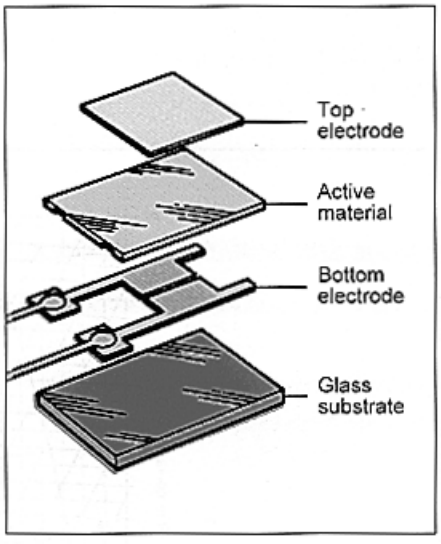

Fig. 5: Construction of the sensor

The atmospheric moisture content depending on temperature passes as water vapour through the hygroscopic top electrode of the humidity sensor and reaches the active polymer film.

The quantity of water vapour absorbed by the polymer film alters the electrical properties of the humidity sensor and appears as a change in capacity.

This capacity change is proportional to the change in relative humidity; it is evaluated by the electronics and converted to a standard output signal. The electronics has to be matched to the basic capacity of the individual humidity sensor.

The special arrangement and low mass of capacitive humidity sensors leads to a very fast response. In addition they are largely unaffected by slight contamination and dust.

As protection against touching the surface, the sensors are enclosed in a plastic housing. Condensation-free versions are available for use in the higher moisture range.

M. K. JUCHHEIM GmbH & Co
36035 Fulda, Germany
Phone (0661) 6003-0
Fax (0661) 6003-607
Telex 49701 juf d
email JUMO_de@e-mail.com

UK
Jumo Instrument Co. Ltd.
Temple Bank, Riverway
Harlow Essex CM20 2TT
Phone (01279) 635533
Fax (01279) 635262

USA
Jumo Process Control Inc.
735 Fox Chase
Coatesville, PA 19320
Phone 610-380-8002,
800-554 JUMO
Fax 610-380-8009

Capacitive measurement methods are used e.g in climatic engineering and in industrial processes where there are no high concentrations of corrosive gases or solvents.

The standard measuring range of capacitive humidity sensors is generally from 10 — 90 % rH. High-grade versions permit use in the full range between 0 and 100 % rH.

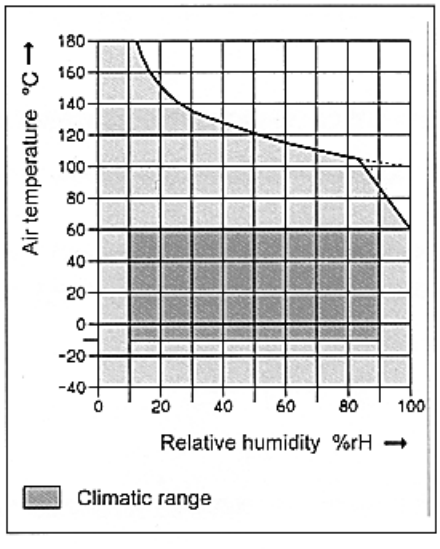

Fig. 6: Working range of a capacitive humidity sensor for industrial applications

One of the main advantages of the capacitive method is the temperature range over which humidity can be measured.

For example, modern industrial humidity transducers permit measurements between −40 and +180 °C, with the temperature being measured simultaneously and provided as a standardised output signal.

Variations of the working range shown are possible depending on the instrument version.

Because of its purely electrical measurement the capacitive method offers a further advantage. High-performance humidity transducers incorporating modern microprocessor technology can be provided with a large number of possible options and functions.

Variations in gas pressure and air flow rates have hardly any influence on the capacitive humidity sensor so that instrument versions are available for measurement under pressures between 0 and 100 bar.

Accuracy is between ±2 and ±5 % rH depending on the instrument version. Under certain conditions it is even possible to achieve accuracies of ±1 % rH.

Hygrometric methods
The hygrometric procedure employs the special characteristics of hygroscopic fibrous materials for determining humidity. If these fibres are exposed to ambient air, there is (after an equilibration period) a measurable change in length depending on the moisture content of the air.

From the condition of the fibres it is possible to deduce the amount of humidity present.

Hygrometric measuring elements employ mainly specially prepared plastic threads and human hair.

Hair measuring element
The action of the measuring element is based on the fact that the hair used is capable of absorbing moisture. This moisture take-up causes the hair to swell which shows itself mainly in a change in length.

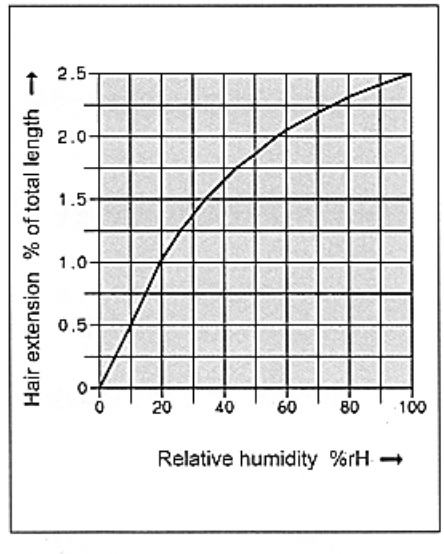

Fig. 7: Change of hair length depending on relative humidity

Increasing humidity in the air causes an increase in the hair length. The length change amounts to approx. 2.5 % of the total hair length for a humidity change from 0 to 100 %. At high humidities the hair exhibits only a relatively small increase in length (see Fig. 7).

Hair measuring elements are used mainly in dial instruments in the climatic field. A special precision mechanism converts the length change of the hair into a pointer or pen movement. For increased mechanical strength it is usual to combine several hairs into a hair bundle or hair grid.

The method offers an accuracy of ±3 % within the range 0 — 90 (100) % rH. Ambient temperatures between −35 and +50 °C can be covered.

When used for longer periods in the low humidity range below 40 % rH the hair element has to be regenerated. This operation consists of exposing the hair hygrometer for approx. 60 minutes to virtually saturated air (about 94 — 98 %). Any correction of the pointer position which may prove necessary can then be carried out using an adjusting screw.

Hair hygrometers are sensitive to hygroscopic dust and have to be suitably protected and/or cleaned at appropriate intervals.

Plastic measuring element
Plastic elements employ plastic threads in place of human hair. A special process is used to give these fibres certain hygroscopic properties. Changes in relative humidity produce a proportional length change of the measuring element. The change in length is again transmitted by a precision mechanism.

Plastic elements offer the advantage that they can be used at higher temperatures (up to 110 °C) and also for longer periods at low relative humidities. No regeneration as in the case of hair element is required here.

The plastic measuring element is resistant to water and unaffected by dry dirt, dust, loose fibres and similar contamination. The measurement/working range covers (0) 30 — 100 % rH, but depends on ambient temperature (see Fig. 8).

Accuracy is ±2 — 3 %.

Hygrometric instruments with a plastic element are employed for long-term humidity measurement in industrial processes and in climatic engineering because of their extensive stability and compatibility with higher temperatures.

Various instrument versions are available to suit particular applications.

M. K. JUCHHEIM GmbH & Co
36035 Fulda, Germany
Phone (0661) 6003-0
Fax (0661) 6003-607
Telex 49701 juf d
email JUMO_de@e-mail.com

UK
Jumo Instrument Co. Ltd.
Temple Bank, Riverway
Harlow Essex CM20 2TT
Phone (01279) 635533
Fax (01279) 635262

USA
Jumo Process Control Inc.
735 Fox Chase
Coatesville, PA 19320
Phone 610-380-8002,
800-554 JUMO
Fax 610-380-8009

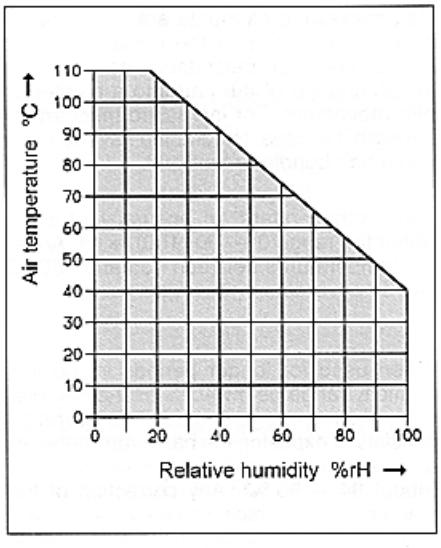

Fig. 8: Maximum temperature and humidity of a plastic measuring element

They include, among others:

Hygro transducers
In these devices the length change of the plastic element is sensed through a suitable system and usually converted into a linear resistance signal. Versions are also available with built-in 2-wire transmitter so that standardised current and voltage signals are provided at the output. Units with an additional temperature measuring range are referred to as hygro-thermo transducers.

Hygrostats
In this variant the length change of the measuring element is used to operate a switching contact. Hygrostats are used to control humidifiers and de-humidifiers.

Hygrograph
A hygrograph is a humidity recorder with a hygrometric hair or plastic sensing element. Additional temperature recording is also possible (hygro-thermograph). Applications include meteorological stations.

Hygrometric methods can be used generally for humidity measurement at atmospheric pressure and in a non-aggressive atmosphere.

Use in corrosive atmospheres or those containing solvents should be avoided as these result in incorrect readings depending on type and concentration, and can even destroy the measuring element.

Conclusions

The section on humidity measurement methods and their applications covers basic principles. Actual instrument descriptions and technical data may therefore vary for different manufacturers. Full information can be obtained from operating instructions or data sheets for the individual instruments.

JUMO GmbH & Co. KG
Delivery address: Mackenrodtstraße 14
36039 Fulda, Germany
Postal address: 36035 Fulda, Germany
Phone: +49 661 6003-0
Fax: +49 661 6003-607
E-mail: mail@jumo.net
Internet: www.jumo.net

JUMO Instrument Co. Ltd.
JUMO House
Temple Bank, Riverway
Harlow, Essex CM20 2DY, UK
Phone: +44 1279 635533
Fax: +44 1279 635262
E-mail: sales@jumo.co.uk
Internet: www.jumo.co.uk

JUMO Process Control, Inc.
6733 Myers Road
East Syracuse, NY 13057, USA
Phone: 315-437-5866
1-800-554-5866
Fax: 315-437-5860
E-mail: info.us@jumo.net
Internet: www.jumousa.com

Hygro and Hygrothermal Transducers (Capacitive) for Air Conditioning Applications

- **For measuring relative humidity and temperature**
- **For versatile climatic applications and ventilation**
- **Available in indoor, wall-mounted, and duct version**
- **Compact rod versions with connecting cable or robust terminal head**
- **With current and voltage outputs as well as passive temperature output**
- **Optional indoor and wall-mounted version with two-line LCD display available**

Designed for the most frequently used ventilation and air conditioning applications, these measuring probes are characterized in particular by their easy installation, robust form, and reliable humidity measurement technology.

The relative humidity is recorded by means of a humidity-dependent capacitor. The capacitive sensor element consists fundamentally of a carrier plate upon which electrodes are placed and a hygroscopic layer of polymer over this. This polymer film absorbs or releases water molecules from the medium being measured (air), thereby changing the capacity of the capacitor. A downstream electronic circuit converts the capacity corresponding to air humidity, and produces a standardized current or voltage signal.

The measuring probes are only designed for atmospheric pressure systems and non-aggressive gases. They are non-condensing and guarantee a reliable humidity measurement for each working range. Versions are available with an additional temperature duct for extended application.

The measured values are transferred by way of standardized output signals with 4 to 20 mA, 0 to 1 V, or 0 to 10 V at the subsequent electronics. Some versions are also optionally available with a passive Pt100 temperature output, which rules out costs for extended electronics.

The new indoor and wall-mounted case was specifically designed to meet the requirements of the user with regard to ease of assembly and maintenance, as well as looking to optimize measurement technology. A separate, removable case bottom section with predefined mounting holes, which are also suitable for flush-mounted socket assembly, ensures, amongst other things, very simple installation of the indoor version. The simple but practical sealing system also enables easy opening and closing of the device without requiring a great effort. The robust wall case with increased IP65 humidity protection accounts for this requirement. For example, only a single screw is necessary here in order to secure the device.

Both new variants can be delivered with a two-line LCD display, which enables the simultaneous display of current humidity and temperature measured values in the range of -30 to +60 (+80) °C depending on the version.

JUMO GmbH & Co. KG
Delivery address: Mackenrodtstraße 14
36039 Fulda, Germany
Postal address: 36035 Fulda, Germany
Phone: +49 661 6003-0
Fax: +49 661 6003-607
E-mail: mail@jumo.net
Internet: www.jumo.net

JUMO Instrument Co. Ltd.
JUMO House
Temple Bank, Riverway
Harlow, Essex CM20 2DY, UK
Phone: +44 1279 635533
Fax: +44 1279 635262
E-mail: sales@jumo.co.uk
Internet: www.jumo.co.uk

JUMO Process Control, Inc.
6733 Myers Road
East Syracuse, NY 13057, USA
Phone: 315-437-5866
1-800-554-5866
Fax: 315-437-5860
E-mail: info.us@jumo.net
Internet: www.jumousa.com

Technical data

Humidity (RH)

Humidity sensor	Capacitive (thin-film, non-condensing)
Measuring range	0 to 100 % RH
Working range	0 to 100 % RH; wall-mounted version 5 to 95 % RH; rod and duct version 10 to 90 % RH; indoor version
Measuring accuracy	±2.5 % RH; indoor version in humidity range from 40 to 60 % RH ±3.0 % RH; residual range ±2.0 % RH; wall-mounted version in humidity range of 10 to 90 % RH ±2.5 % RH; residual range ±2.0 % RH; duct version in humidity range of 40 to 60 % RH ±2.5 % RH; residual range ±2.0 % RH; rod version in humidity range from 5 to 95 % RH
Temperature influence	±0.05 % RH per K; indoor and wall-mounted version (based on 23 °C) < 0.15 % RH per K; duct version (at < 10 °C, > 40 °C) < 0.10 % RH per K; rod version (at < 10 °C, > 40 °C)
Measurement medium	Air, atmospheric pressure, non-aggressive
Humidity output (active) (for connection diagram, see operating manual)	4 to 20 mA 0 to 1 V (not possible with duct version) 0 to 10 V
Air velocity	Min. 0.5 m/s (1.5 m/s for rod version with current output) Max. 15 m/s (wall-mounted version 10 m/s)
Response time	Half-period: 10 s to 1.2 min at v = 2 m/s (depending on design type and filter used, excluding indoor version)

Temperature (T)

Sensing element	Pt100 or Pt1000 thin-film temperature sensor according to DIN EN 60751 (depending on version)
Measuring range	See order details (only scaling, observe max. admissible ambient temperature)
Working range	-30 to +60 °C; indoor version -30 to +80 °C; wall-mounted, duct, and rod version
Measuring accuracy	±0.25 K; indoor version at voltage output ±0.4 K; indoor version at current output (10 to 40 °C)
	±0.2 K; wall-mounted version at voltage output ±0.3 K; wall-mounted version at current output (10 to 40 °C) ±0.3 K; duct and rod version
Temperature influence	±0.01 K/K (at < 10 °C, > 40 °C)
Temperature output (active) (for wire system, see wiring diagrams)	DC 0 to 1 V (not for duct version) DC 0 to 10 V 4 to 20 mA
Temperature output (passive)	Pt100 (only with duct and rod version, see order details)

JUMO GmbH & Co. KG
Delivery address: Mackenrodtstraße 14
36039 Fulda, Germany
Postal address: 36035 Fulda, Germany
Phone: +49 661 6003-0
Fax: +49 661 6003-607
E-mail: mail@jumo.net
Internet: www.jumo.net

JUMO Instrument Co. Ltd.
JUMO House
Temple Bank, Riverway
Harlow, Essex CM20 2DY, UK
Phone: +44 1279 635533
Fax: +44 1279 635262
E-mail: sales@jumo.co.uk
Internet: www.jumo.co.uk

JUMO Process Control, Inc.
6733 Myers Road
East Syracuse, NY 13057, USA
Phone: 315-437-5866
1-800-554-5866
Fax: 315-437-5860
E-mail: info.us@jumo.net
Internet: www.jumousa.com

Electrical data

Voltage supply	
Indoor and wall-mounted version	DC 6 to 30 V or AC 6 to 26 V (at 0 to 1 V) DC 15 to 30 V or AC 13 to 26 V (at 0 to 10 V) DC 10 to 25 V (indoor version at 4 to 20 mA) DC 10 to 30 V (wall-mounted version at 4 to 20 mA)
Duct version	DC 15 to 30 V AC 24 V (also at 0 to 10 V)
Rod version	DC 12 to 30 V DC 15 to 30 V (at 0 to 10 V) DC 6 to 30 V (at 0 to 1 V)
Burden (I output)	$R_L(\Omega) = \frac{\text{Voltage supply - DC 10 V}}{\text{0,02 A}} \pm 50\ \Omega$
Load resistance (U output)	> 10 kΩ (at 0 to 10 V), > 2 kΩ (at 0 to 1 V)
Consumption	Typically 7 mA at voltage output, < 1 mA at 0 to 1 V (per measuring range with four-wire system)
Electromagnetic compatibility CE	According to EN 61326-1 and EN 61326-2-3

Construction

Case	
Indoor version	ABS plastic, signal white (RAL 9003)
Wall-mounted version	PC plastic
Duct version	ABS plastic with attached aluminum probe, painted
Rod version	Form J aluminum terminal head, probe as in duct version, optionally with 1.5 m connecting cable
Dimensions	
Indoor version	81 × 81 × 25.7 mm
Wall-mounted version	83 × 83 × 40 mm (probe Ø 12 × 50 mm)
Duct version	248 × 120 × 48 mm (probe Ø 20 × 200 mm)
Rod version	Probe Ø 20 × 122 mm)
Cable entry	
Indoor version	Opening on the underside or rear side (flush-mounted socket assembly optional)
Wall-mounted version	via cable gland M16 × 1.5
Duct version	via cable gland M20 × 1.5
Rod version	via cable gland M16 × 1.5 (for version with form J terminal head)
Terminals	For conductor cross sections of up to 1.5 mm^2
Wiring diagrams	Please use the terminal connection from the operating manual included in the scope of delivery (according to version). For planning activities, the operating manuals are also available online to download as pdf files at www.jumo.net.
Protection type	
Indoor version	IP30
Wall-mounted version	IP65 (IP30 probe (standard), with PTFE IP65 sinter filter)
Duct version	IP64 (IP30 probe (standard), with PTFE IP65 sinter filter)
Rod version	IP65 (IP30 probe (standard), with PTFE IP65 sinter filter)
Operating temperature	
Indoor version	-30 to +60 °C
Wall-mounted version	-30 to +80 °C
Duct version	-40 to +80 °C at the probe head (filter area) -10 to +60 °C at the case
Rod version	-20 to +60 °C -40 to +80 °C at the probe head (filter area)

JUMO GmbH & Co. KG
Delivery address: Mackenrodtstraße 14
36039 Fulda, Germany
Postal address: 36035 Fulda, Germany
Phone: +49 661 6003-0
Fax: +49 661 6003-607
E-mail: mail@jumo.net
Internet: www.jumo.net

JUMO Instrument Co. Ltd.
JUMO House
Temple Bank, Riverway
Harlow, Essex CM20 2DY, UK
Phone: +44 1279 635533
Fax: +44 1279 635262
E-mail: sales@jumo.co.uk
Internet: www.jumo.co.uk

JUMO Process Control, Inc.
6733 Myers Road
East Syracuse, NY 13057, USA
Phone: 315-437-5866
1-800-554-5866
Fax: 315-437-5860
E-mail: info.us@jumo.net
Internet: www.jumousa.com

Installation position	For duct and rod version, install probe tube at an angle or vertically downwards, if possible. For indoor version, position vent openings downwards if possible. Install the measuring probe in a way that prevents ingress of water. Mount directly via openings in the case or using optional installation accessories.
Weight	
Indoor or wall-mounted version	Approx. 200 g
Rod or duct version	Approx. 150 to 350 g, depending on version

Filters

Plastic-grid power-line filter "ZE17"	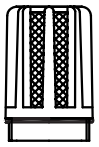	Ø 20 × 25 mm, thread M18 × 1 Standard: with duct and rod version. Protects against coarse contamination, quick-response, response time approx. 1 min (v = 1.5 m/s).
Plastic-grid membrane filter "ZE20"		Ø 20 × 25 mm, thread M18 × 1 for outdoor use, better protection from aerosols, up to v = 10 m/s, response time approx. 1.5 min (v = 1.5 m/s)
Stainless steel sinter filter "ZE21"	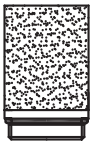	Ø 20 × 25 mm, thread M18 × 1 for extreme operating conditions, at a high air velocity up to 20 m/s and increased dust accumulation, response time approx. 1.5 min (v = 1.5 m/s)
PTFE filter "ZE18"	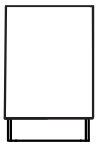	Ø 20 × 25 mm, thread M18 × 1 Sinter filter made from fine-pored PTFE for sensor tubes of 20 mm for extreme operating conditions. **Note:** When using this filter, the EMC Directive EN 50082-2 is not fulfilled for certain sensors. Response time approx. 3 min (v = 1.5 m/s)
Plastic-grid membrane filter "ZE08"		Ø 12 × 33 mm, thread M10 × 0.75 Standard: for wall-mounted version. For outdoor use up to v = 10 m/s. Protection from aerosols and dust. Response time approx. 1.5 min (v = 1.5 m/s)
PTFE filter "ZE05"		Ø 12 × 35 mm, thread M10 × 0.75 Sinter filter made from fine-pored PTFE for probe tubes of 12 mm. For extreme operating conditions. Response time approx. 3 min (v = 1.5 m/s)

JUMO GmbH & Co. KG
Delivery address: Mackenrodtstraße 14
36039 Fulda, Germany
Postal address: 36035 Fulda, Germany
Phone: +49 661 6003-0
Fax: +49 661 6003-607
E-mail: mail@jumo.net
Internet: www.jumo.net

JUMO Instrument Co. Ltd.
JUMO House
Temple Bank, Riverway
Harlow, Essex CM20 2DY, UK
Phone: +44 1279 635533
Fax: +44 1279 635262
E-mail: sales@jumo.co.uk
Internet: www.jumo.co.uk

JUMO Process Control, Inc.
6733 Myers Road
East Syracuse, NY 13057, USA
Phone: 315-437-5866
1-800-554-5866
Fax: 315-437-5860
E-mail: info.us@jumo.net
Internet: www.jumousa.com

Notes for the user

Installation	Install the humidity transducers at a location that is representative for humidity measurement, indoors, on walls, or on devices and systems. Avoid installing near to radiators, windows, and doors (also exterior walls for indoor measurements), or on surfaces subject to heavy impacts/vibration or exposed to direct sunlight. Protect the measuring probes against dirt, dripping, and splashing water. Although condensation and splashing water are not harmful to the transducer, they can cause the sensor element to dry out and produce faulty readings. Dust generally has no damaging effect, but can impair the dynamic behavior of the measuring probe. The specified minimum air velocities and the burden matched to the operating voltage for the current output should be adhered to. Deviations from this can lead to additional errors in measurement being made, as a result of self-heating. To ensure that the interference immunity of the measuring probe is maintained, installation should be carried out according to the protective measures of the EMC legislation.
Maintenance information for humidity sensing element	The capacitive humidity sensing element requires no maintenance in normal clean ambient air. Aggressive media or those containing solvents may cause faulty readings or even failure. Deposits forming a water-repellent film on the sensing element are liable to cause faulty operation. Contaminated protective filters must be replaced. Do not touch the surface of the humidity sensor. The sensor may be cleaned using distilled water in the case of devices with an offset measuring probe. The correct measured values are readjusted when the device has completely dried out. With the indoor version, a soft brush can be used for cleaning.
Checking and calibration	To check the measuring probe for accuracy of humidity measurements (recommended once annually), humidity sensor checks can be implemented. The procedure is described in more detail in DIN 50008, IEC Publication 260, ISO/R 483-1966. The basic principle consists of an appropriate climate being produced above an aqueous, saturated salt solution. Humidity sensor checks with values of 33 % RH, 53 % RH, and 76 % RH are available in the accessories. 
Caution: Any manipulations of the internal components will lead to warranty claims becoming null and void.	

JUMO GmbH & Co. KG
Delivery address: Mackenrodtstraße 14
36039 Fulda, Germany
Postal address: 36035 Fulda, Germany
Phone: +49 661 6003-0
Fax: +49 661 6003-607
E-mail: mail@jumo.net
Internet: www.jumo.net

JUMO Instrument Co. Ltd.
JUMO House
Temple Bank, Riverway
Harlow, Essex CM20 2DY, UK
Phone: +44 1279 635533
Fax: +44 1279 635262
E-mail: sales@jumo.co.uk
Internet: www.jumo.co.uk

JUMO Process Control, Inc.
6733 Myers Road
East Syracuse, NY 13057, USA
Phone: 315-437-5866
1-800-554-5866
Fax: 315-437-5860
E-mail: info.us@jumo.net
Internet: www.jumousa.com

Dimensions

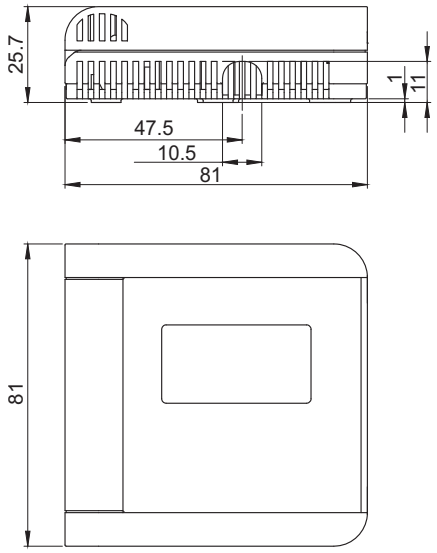

Indoor version
(For drilling pattern, see packaging)

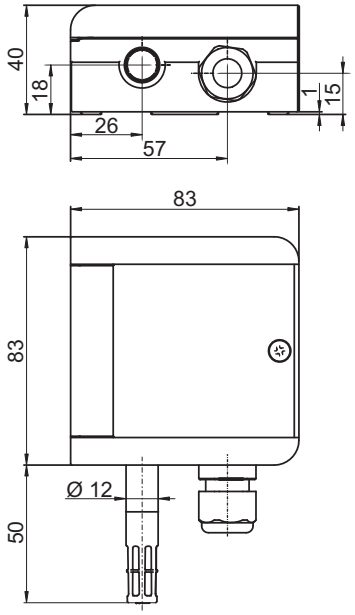

Wall-mounted version
(For drilling pattern, see packaging)

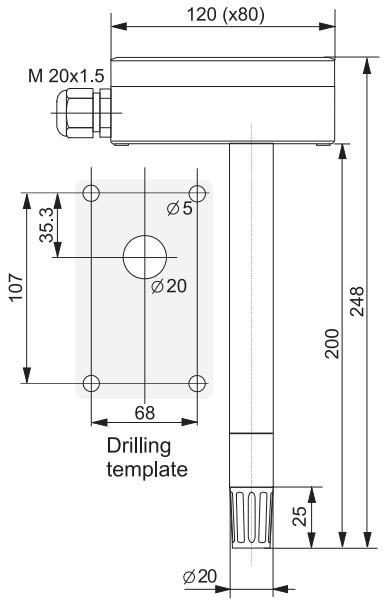

Duct version

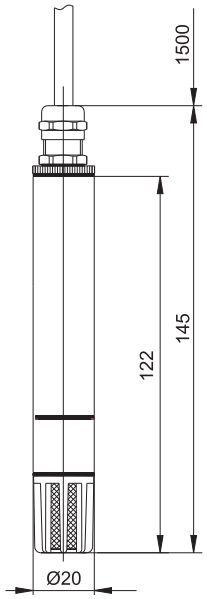

Rod version
with connecting cable

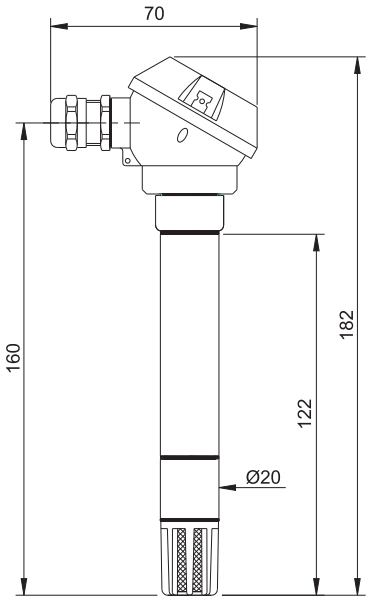

Rod version
with form J terminal head

Measurements in mm

JUMO GmbH & Co. KG
Delivery address: Mackenrodtstraße 14
36039 Fulda, Germany
Postal address: 36035 Fulda, Germany
Phone: +49 661 6003-0
Fax: +49 661 6003-607
E-mail: mail@jumo.net
Internet: www.jumo.net

JUMO Instrument Co. Ltd.
JUMO House
Temple Bank, Riverway
Harlow, Essex CM20 2DY, UK
Phone: +44 1279 635533
Fax: +44 1279 635262
E-mail: sales@jumo.co.uk
Internet: www.jumo.co.uk

JUMO Process Control, Inc.
6733 Myers Road
East Syracuse, NY 13057, USA
Phone: 315-437-5866
1-800-554-5866
Fax: 315-437-5860
E-mail: info.us@jumo.net
Internet: www.jumousa.com

Dimensions

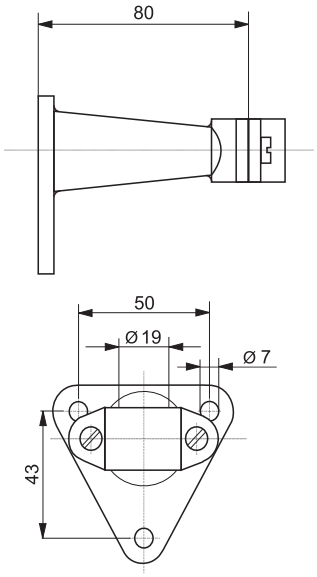

Support frame (holder for wall mounting) for duct and rod version

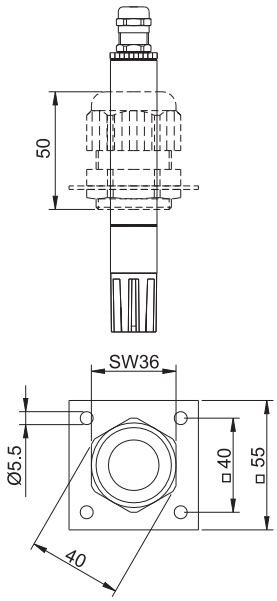

Mounting plate "ZA20" with clamping screw connection for duct and rod version

Measurements in mm

JUMO GmbH & Co. KG
Delivery address: Mackenrodtstraße 14
36039 Fulda, Germany
Postal address: 36035 Fulda, Germany
Phone: +49 661 6003-0
Fax: +49 661 6003-607
E-mail: mail@jumo.net
Internet: www.jumo.net

JUMO Instrument Co. Ltd.
JUMO House
Temple Bank, Riverway
Harlow, Essex CM20 2DY, UK
Phone: +44 1279 635533
Fax: +44 1279 635262
E-mail: sales@jumo.co.uk
Internet: www.jumo.co.uk

JUMO Process Control, Inc.
6733 Myers Road
East Syracuse, NY 13057, USA
Phone: 315-437-5866
1-800-554-5866
Fax: 315-437-5860
E-mail: info.us@jumo.net
Internet: www.jumousa.com

Order details

						(1)	**Basic type**	
					907020/11		Hygro transducer/hygrothermal transducer – indoor version	
					907020/20		Hygro transducer/hygrothermal transducer – wall-mounted version	
					907020/30		Hygro transducer/hygrothermal transducer – duct version	
					907020/40		Hygro transducer/hygrothermal transducer – rod version with 1.5 m connecting cable	
					907020/41		Hygro transducer/hygrothermal transducer – rod version with form J terminal head	
						(2)	**Version**	
x	x	x	x	x	1		Humidity	
x	x	x	x	x	2		Humidity and temperature	
			x	x	3		Humidity and temperature (passive temperature)	
						(3)	**Measuring range[a]**	
x	x	x	x	x	00		0 to 100 % RH	
			x		10		0 to 100 % RH;	-20 to +80 °C
		x			21		0 to 100 % RH;	-30 to +60 °C
x	x		x	x	22		0 to 100 % RH;	-30 to +70 °C
x	x	x			34		0 to 100 % RH;	0 to 50 °C
x	x	x			36		0 to 100 % RH;	0 to 100 °C
						(4)	**Output**	
x	x	x	x	x	005		4 to 20 mA;	4 to 20 mA[b]
			x	x	006		4 to 20 mA;	Pt100 (passive)[b]
x	x		x	x	051		0 to 1 V;	0 to 1 V[b]
			x	x	052		0 to 1 V;	Pt100 (passive)[b]
x	x	x	x	x	065		0 to 10 V;	0 to 10 V[b]
			x	x	066		0 to 10 V;	Pt100 (passive)[b]
						(5)	**Extra codes**	
x	x	x	x	x	000		without	
x	x				793		LCD display (two-line)	
			x		819		Coupling plug (without connecting cable)	

[a] Please observe the humidity and permissible ambient temperatures for the working range (see technical data)!
[b] A second output is only available with combination devices (humidity and temperature).

	(1)		(2)		(3)		(4)		(5)
Order code		-		-		-		/	
Order example	907020/11	-	1	-	00	-	005	/	000

JUMO GmbH & Co. KG
Delivery address: Mackenrodtstraße 14
36039 Fulda, Germany
Postal address: 36035 Fulda, Germany
Phone: +49 661 6003-0
Fax: +49 661 6003-607
E-mail: mail@jumo.net
Internet: www.jumo.net

JUMO Instrument Co. Ltd.
JUMO House
Temple Bank, Riverway
Harlow, Essex CM20 2DY, UK
Phone: +44 1279 635533
Fax: +44 1279 635262
E-mail: sales@jumo.co.uk
Internet: www.jumo.co.uk

JUMO Process Control, Inc.
6733 Myers Road
East Syracuse, NY 13057, USA
Phone: 315-437-5866
1-800-554-5866
Fax: 315-437-5860
E-mail: info.us@jumo.net
Internet: www.jumousa.com

Stock versions

Order code	Part no.
907020/11-1-00-005/000	00609642
907020/11-2-34-005/000	00609648
907020/11-2-34-005/793	00609649
907020/20-1-00-005/000	00609651
907020/20-2-22-005/000	00609653
907020/20-2-22-005/793	00609654
907020/30-1-00-005/000	00315103
907020/30-1-00-065/000	00315104
907020/30-2-21-005/000	00332698
907020/30-2-21-065/000	00403752
907020/30-2-34-005/000	00315106
907020/30-2-34-065/000	00315107
907020/30-2-36-005/000	00332700
907020/40-1-00-005/000	00403753
907020/40-1-00-065/000	00403755
907020/40-2-22-005/000	00403754
907020/40-2-22-065/000	00402259
907020/41-1-00-005/000	00473743
907020/41-1-00-065/000	00473744
907020/41-2-22-005/000	00473745
907020/41-2-22-065/000	00473746

Accessories

Item	Part no.
Humidity sensor check: 33 % RH	00332758
Humidity sensor check: 53 % RH	00332759
Humidity sensor check: 76 % RH	00332760
Stainless steel sinter filter "ZE21" Ø 20 × 25 mm, thread M18 × 1	00352114
Plastic-grid power-line filter "ZE17" Ø 20 × 25 mm, thread M18 × 1	00367344
Plastic-grid membrane filter "ZE20" Ø 20 × 25 mm, thread M18 × 1	00403756
PTFE filter "ZE18" Ø 20 × 25 mm, thread M18 × 1	00511063
Plastic-grid membrane filter "ZE08" Ø 12 × 33 mm, thread M10 × 0.75	00609659
PTFE filter "ZE05" Ø 12 × 35 mm, thread M10 × 0.75	00609660
Mounting plate "ZA20" with clamping screw connection for duct and rod version	00403757
Support frame (holder for wall mounting) for duct and rod version	60171300

JUMO GmbH & Co. KG
Delivery address: Mackenrodtstraße 14
36039 Fulda, Germany
Postal address: 36035 Fulda, Germany
Phone: +49 661 6003-0
Fax: +49 661 6003-607
Email: mail@jumo.net
Internet: www.jumo.net

JUMO Instrument Co. Ltd.
JUMO House
Temple Bank, Riverway
Harlow, Essex, CM20 2DY, UK
Phone: +44 1279 63 55 33
Fax: +44 1279 62 50 29
Email: sales@jumo.co.uk
Internet: www.jumo.co.uk

JUMO Process Control, Inc.
6733 Myers Road
East Syracuse, NY 13057, USA
Phone: +1 315 437 5866
Fax: +1 315 437 5860
Email: info.us@jumo.net
Internet: www.jumousa.com

Hygro Transducer, Hygrothermal Transducer, and CO_2 Measuring Probe for Building Management and Climate Monitoring

- **For measuring relative air humidity, temperature, and fresh air quality**
- **Available in indoor, wall-mounted, duct, and rod versions**
- **For applications in building management and in areas of climate and ventilation monitoring**
- **Option of LCD display**
- **Available with current, voltage, or Modbus output, and passive resistance output for temperature**

These capacitive humidity measuring probes are designed for the most common applications in heating, air-conditioning, and ventilation technology and stand out in particular due to their high measuring accuracy, excellent long-term stability, and good chemical resistance. The modern case concepts make for low installation costs and offer the greatest possible protection from pollutants and condensation, which in turn allows the best and most fault-free continuous operation possible.

The CO_2 measuring probes use proven infrared technology for measuring the carbon dioxide concentration. The NDIR procedure used in this has a patented auto calibration function, eliminates aging effects, and so allows accurate measurement of the CO_2 values with long-term stability.

Different combination options between the measurands carbon dioxide (CO_2), humidity (RH), and temperature (T) in visually appealing and easy-to-install cases once again set new standards in heating, air-conditioning, and ventilation technology, as well as in many other areas in which relevant measurement technology is used. This series enables a broad spectrum of uses in indoor, wall-mounted, duct, and rod versions.

Standardized current or voltage signals are available as outputs, and for some devices passive resistance outputs as well as a digital output are also available as an option. Measuring probes in indoor and wall-mounted versions can be equipped with a digital display.

Depending on the particular version and design type, applications exist across practically the entire building management sector, and in all areas of air-conditioning and ventilation technology.

Areas of application: humidification and de-humidification plants, accommodation and office areas, public buildings, agriculture and stables, incubators, drying chambers, greenhouses, storage rooms and cold stores, production halls, indoor swimming pools, etc.

JUMO GmbH & Co. KG
Delivery address: Mackenrodtstraße 14
36039 Fulda, Germany
Postal address: 36035 Fulda, Germany
Phone: +49 661 6003-0
Fax: +49 661 6003-607
Email: mail@jumo.net
Internet: www.jumo.net

JUMO Instrument Co. Ltd.
JUMO House
Temple Bank, Riverway
Harlow, Essex, CM20 2DY, UK
Phone: +44 1279 63 55 33
Fax: +44 1279 62 50 29
Email: sales@jumo.co.uk
Internet: www.jumo.co.uk

JUMO Process Control, Inc.
6733 Myers Road
East Syracuse, NY 13057, USA
Phone: +1 315 437 5866
Fax: +1 315 437 5860
Email: info.us@jumo.net
Internet: www.jumousa.com

Technical data

Humidity (RH)

Humidity sensor	Capacitive, can take condensation (with sensor coating)	
Humidity measuring range	0 to 100 % RH	
Humidity working range	10 to 90 % RH:	Indoor version
	10 to 95 % RH:	Wall-mounted and duct version (HVAC)
	0 to 100 % RH:	Wall-mounted and duct version, rod version
Humidity accuracy at 20 °C	±2 % RH:	Indoor version and display unit in the humidity range of 40 to 60 % RH, wall-mounted and duct version in the humidity range of 0 to 90 % RH, rod version with Modbus output, (in the remaining range ±3 % RH)
	±2.5 % RH:	Wall-mounted and duct version (HVAC), rod version (for DC 24 V, 20 °C and 0.2 m/s)
	±3 % RH:	Indoor version with CO_2 in the humidity range of 30 to 70 % RH, (in the remaining range ±5 % RH)
Temperature dependency	±0.03 % RH/°C (typical)	
Sensor coating	Sensor coating for the humidity sensor is an additional protective coating, which offers better protection from contaminants for the humidity sensor and in many cases allows for longer service life, especially with particularly contaminated or aggressive atmospheres. With the exception of the indoor version, all devices are equipped with this feature for increased protection as standard.	

Temperature (T)

Temperature sensor	Platinum-chip temperature sensor Pt1000 according to DIN EN 60751, (passive also Pt100)	
Temperature measuring range	0 to 50 °C:	Indoor version; wall-mounted and duct version (HVAC) and (CO_2)
	-40 to +80 °C:	Wall-mounted and duct version (observe admissible ambient temperature)
	-40 to +60 °C:	Rod version (-40 to +80 °C with Modbus output)
Temperature accuracy at 20 °C	±0.2 °C:	Wall-mounted and duct version, rod version with Modbus output (±0.6 °C in the end range at 20 °C)
	±0.3 °C:	Indoor version – voltage output, duct version (CO_2)
	±0.4 °C:	Indoor version – current output (±0.7 °C with CO_2)
	±0.3 °C:	Wall-mounted and duct version (HVAC); rod version

Carbon dioxide (CO_2)

Measuring principle	NDIR (non-dispersive infrared technology)
Sensor	2-beam infrared cells
Measuring range	0 to 2000 ppm, 0 to 5000 ppm
	0 to 10000 ppm (only wall-mounted and duct version)
Accuracy at 25 °C and 1013 mbar	±(50 ppm +2 % of the measured value) for 0 to 2000 ppm
	±(50 ppm +3 % of the measured value) for 0 to 5000 ppm
	±(100 ppm +5 % of the measured value) for 0 to 10000 ppm
Temperature dependency	2 ppm CO_2/°C (typical)
Long-term stability	20 ppm/a (typical)
Sampling rate	Approx. 15 s
Response time	< 195 s (300 s for wall-mounted version)
Warm-up time	< 5 min

JUMO GmbH & Co. KG
Delivery address: Mackenrodtstraße 14
36039 Fulda, Germany
Postal address: 36035 Fulda, Germany
Phone: +49 661 6003-0
Fax: +49 661 6003-607
Email: mail@jumo.net
Internet: www.jumo.net

JUMO Instrument Co. Ltd.
JUMO House
Temple Bank, Riverway
Harlow, Essex, CM20 2DY, UK
Phone: +44 1279 63 55 33
Fax: +44 1279 62 50 29
Email: sales@jumo.co.uk
Internet: www.jumo.co.uk

JUMO Process Control, Inc.
6733 Myers Road
East Syracuse, NY 13057, USA
Phone: +1 315 437 5866
Fax: +1 315 437 5860
Email: info.us@jumo.net
Internet: www.jumousa.com

Electrical data

Voltage supply	DC 15 to 35 V, AC 24 V ±20 %:	For output of 0 to 10 V / RS485 or CO_2 measuring probe
	DC 20 to 28 V:	For output of 4 to 20 mA
	DC 20 to 35 V:	For output of 4 to 20 mA (HVAC)
	DC 4.5 to 30 V:	Only rod version with voltage output
	DC 9 to 28 V:	Only rod version with current output
	DC 4 to 18 V:	Only rod version with Modbus output
Current consumption	5 to 15 mA for DC voltage supply (wall-mounted and duct version)	
	13 to 25 mA for AC voltage supply (wall-mounted and duct version)	
	1.5 mA for rod version (typical 0.4 mA for Modbus output, sampling rate 1 s)	
	10 mA plus output current, max. 0.5 A for 0.3 s for CO_2 measuring probe	
Load resistance	R_L < 500 ohm with current output	
Output signals	4 to 20 mA and 0 to 1 V, 0 to 10 V, passive also Pt100 and Pt1000 RS485 digital output (basic types see order details)	
Electromagnetic compatibility	EN 61326-1 and EN 61326-2-3	
Connection	Screw terminals max. 1.5 mm^2	
Connection diagram	See operating manual	

Case

Case	Polycarbonate	
Protection type	IP20: indoor version	
	IP65: wall-mounted, duct and rod version	
Cable entry	M16 × 1.5 wall-mounted and duct version	
Ambient temperature	-20 to +60 °C:	Indoor version, wall-mounted and duct version (CO_2)
	-5 to +55 °C:	Indoor version with LCD display
	-15 to +60 °C:	Wall-mounted and duct version (HVAC)
	-40 to +60 °C:	Wall-mounted and duct version (-20 to +50 °C with LCD display)
	-40 to +60 °C:	Rod version
Storage temperature	-20 to +60 °C:	Indoor version
	-25 to +60 °C	Wall-mounted and duct version (HVAC)
	-40 to +60 °C	Wall-mounted, duct and rod version
Weight	Approx. 100 g:	Indoor version
	Approx. 150 g:	Wall-mounted version
	Approx. 250 g:	Duct version
	Approx. 150 g:	Rod version (1.5 m connecting cable, standard)
	Approx. 180 g:	Rod version (3 m connecting cable)

JUMO GmbH & Co. KG
Delivery address: Mackenrodtstraße 14
36039 Fulda, Germany
Postal address: 36035 Fulda, Germany
Phone: +49 661 6003-0
Fax: +49 661 6003-607
Email: mail@jumo.net
Internet: www.jumo.net

JUMO Instrument Co. Ltd.
JUMO House
Temple Bank, Riverway
Harlow, Essex, CM20 2DY, UK
Phone: +44 1279 63 55 33
Fax: +44 1279 62 50 29
Email: sales@jumo.co.uk
Internet: www.jumo.co.uk

JUMO Process Control, Inc.
6733 Myers Road
East Syracuse, NY 13057, USA
Phone: +1 315 437 5866
Fax: +1 315 437 5860
Email: info.us@jumo.net
Internet: www.jumousa.com

Accessories

Filters	**Plastic-grid membrane filter "HA010101"** (standard)**:** For low to normal contamination levels in the area of heating, ventilation, and air-conditioning. Pore size 1 µm, $t_{10/90}$ approx. 15 s
	Stainless steel sinter filter "HA010103": Most positive effects for high mechanical and thermic stresses. Unsuitable for high-humidity range. Pore size 10 µm, $t_{10/90}$ approx. 30 s
	Plastic-grid power-line filter "HA010106": With high humidity, danger of condensation, or rapidly changing humidity cycles. For average contamination level. Pore size 100 µm, $t_{10/90}$ approx. 7 s
	PTFE filter "HA010105": For high chemical resistance. Pore size 50 µm, $t_{10/90}$ approx. 14 s
Humidity sensor checks	Humidity sensor checks can be used to test the accuracy of humidity measuring probes. The test procedure is described in DIN 50008, IEC publication 260, ISO /R 483-1966. The basic principle consists of an appropriate climate being produced above an aqueous, saturated salt solution. Humidity sensor checks with values of 33 % RH, 53 % RH, and 76 % RH are available from stock.

JUMO GmbH & Co. KG
Delivery address: Mackenrodtstraße 14
36039 Fulda, Germany
Postal address: 36035 Fulda, Germany
Phone: +49 661 6003-0
Fax: +49 661 6003-607
Email: mail@jumo.net
Internet: www.jumo.net

JUMO Instrument Co. Ltd.
JUMO House
Temple Bank, Riverway
Harlow, Essex, CM20 2DY, UK
Phone: +44 1279 63 55 33
Fax: +44 1279 62 50 29
Email: sales@jumo.co.uk
Internet: www.jumo.co.uk

JUMO Process Control, Inc.
6733 Myers Road
East Syracuse, NY 13057, USA
Phone: +1 315 437 5866
Fax: +1 315 437 5860
Email: info.us@jumo.net
Internet: www.jumousa.com

Dimensions

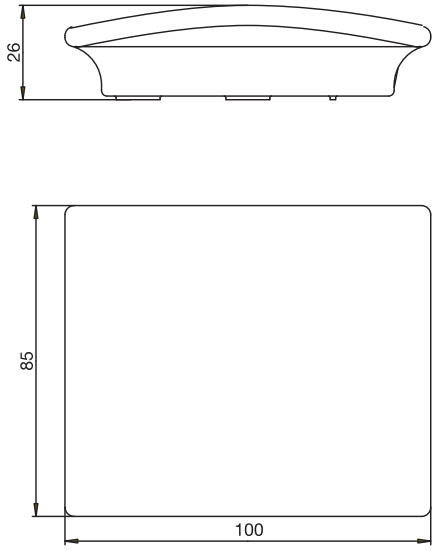

Basic type 907021/11 and 907021/80 indoor version

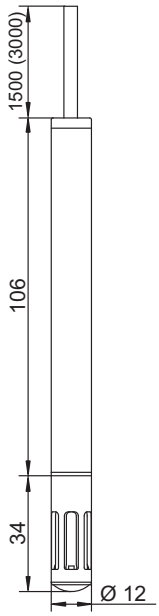

Basic type 907021/60 hygrothermal transducer, rod version with 1.5 m (3 m) connecting cable

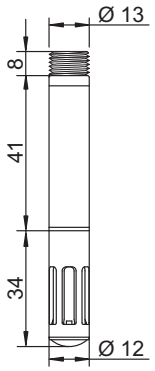

Basic type 907021/71 hygrothermal transducer, rod version with M12 × 1-plug connector

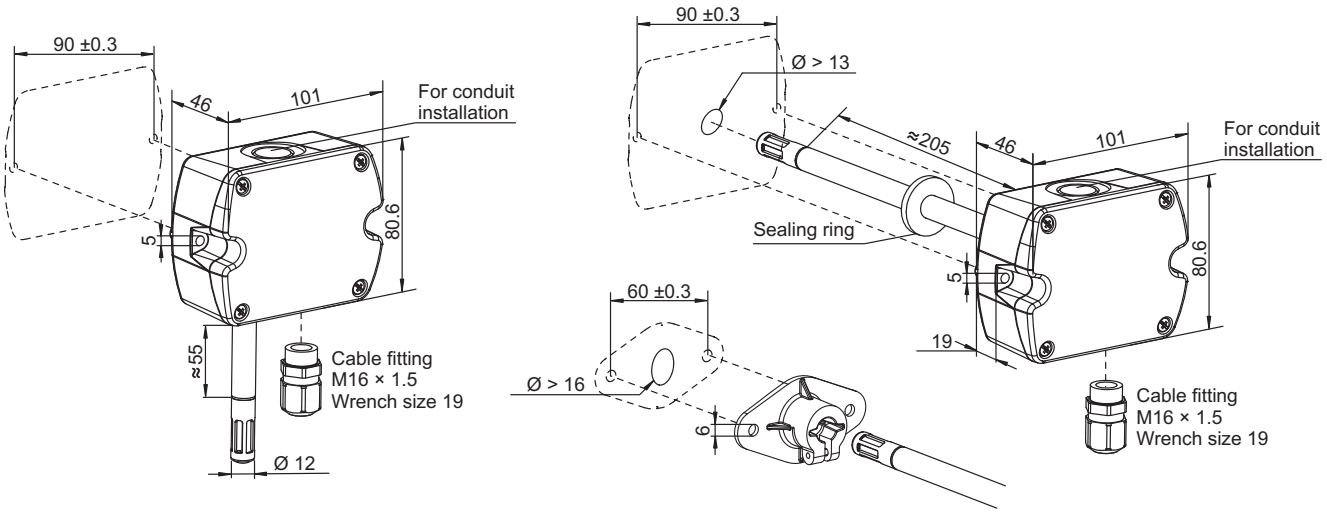

Basic type 907021/160 hygrothermal transducer, wall-mounted version (HVAC) and basic type 907021/161 hygrothermal transducer, duct version (HVAC)

JUMO GmbH & Co. KG
Delivery address: Mackenrodtstraße 14
36039 Fulda, Germany
Postal address: 36035 Fulda, Germany
Phone: +49 661 6003-0
Fax: +49 661 6003-607
Email: mail@jumo.net
Internet: www.jumo.net

JUMO Instrument Co. Ltd.
JUMO House
Temple Bank, Riverway
Harlow, Essex, CM20 2DY, UK
Phone: +44 1279 63 55 33
Fax: +44 1279 62 50 29
Email: sales@jumo.co.uk
Internet: www.jumo.co.uk

JUMO Process Control, Inc.
6733 Myers Road
East Syracuse, NY 13057, USA
Phone: +1 315 437 5866
Fax: +1 315 437 5860
Email: info.us@jumo.net
Internet: www.jumousa.com

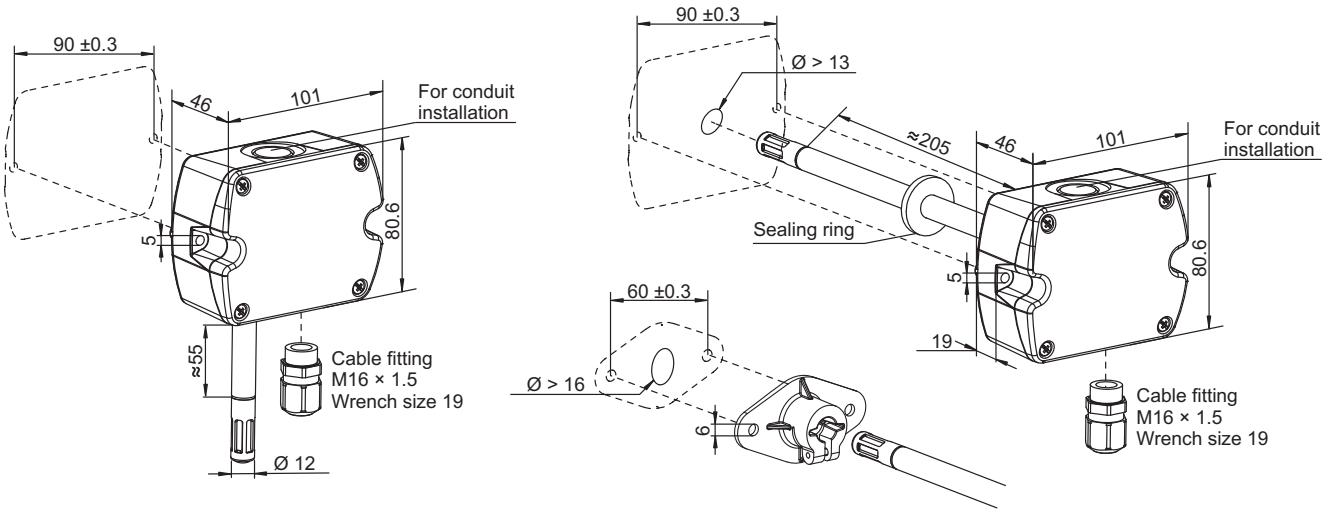

Basic type 907021/210 hygrothermal transducer, wall-mounted version and basic type 907021/211 hygrothermal transducer, duct version

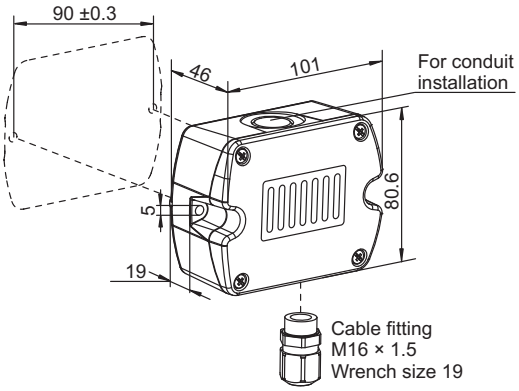

Basic type 907021/820 CO_2 measuring probe, wall-mounted version

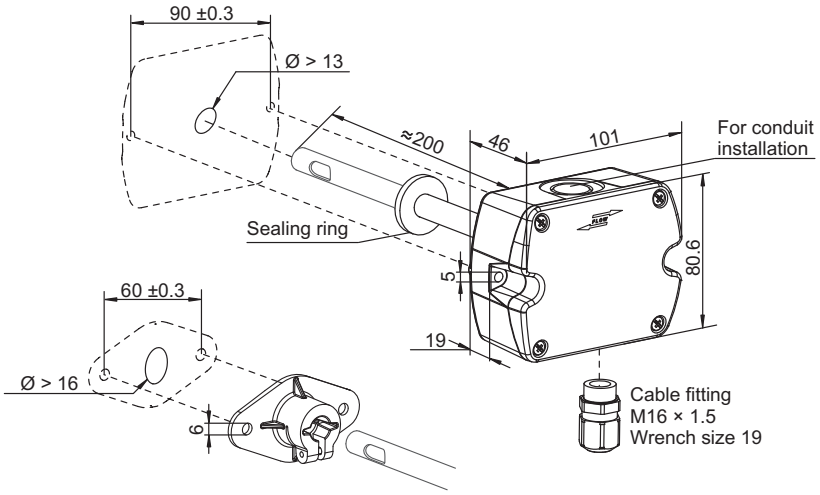

Basic type 907021/850 CO_2 measuring probe, duct version

JUMO GmbH & Co. KG
Delivery address: Mackenrodtstraße 14
36039 Fulda, Germany
Postal address: 36035 Fulda, Germany
Phone: +49 661 6003-0
Fax: +49 661 6003-607
Email: mail@jumo.net
Internet: www.jumo.net

JUMO Instrument Co. Ltd.
JUMO House
Temple Bank, Riverway
Harlow, Essex, CM20 2DY, UK
Phone: +44 1279 63 55 33
Fax: +44 1279 62 50 29
Email: sales@jumo.co.uk
Internet: www.jumo.co.uk

JUMO Process Control, Inc.
6733 Myers Road
East Syracuse, NY 13057, USA
Phone: +1 315 437 5866
Fax: +1 315 437 5860
Email: info.us@jumo.net
Internet: www.jumousa.com

Order details

								(1)	**Basic type**
							907021/11		Hygro transducer, hygrothermal transducer, indoor version
	x						907021/160		Hygrothermal transducer, wall-mounted version (HVAC)
		x					907021/161		Hygrothermal transducer, duct version (HVAC)
			x				907021/210		Hygrothermal transducer, wall-mounted version
				x			907021/211		Hygrothermal transducer, duct version
					x		907021/60		Hygrothermal transducer, rod version with 1.5 m connecting cable
						x	907021/71		Hygrothermal transducer, rod version with M12 × 1-plug connector
								(2)	**Version**
x	x	x	x	x	x			2	Humidity and temperature
x	x	x						3	Humidity and temperature (T passive)
	x	x	x	x		x		9	Humidity and temperature (digital)
								(3)	**Measuring ranges / scaling (observe admissible ambient temperature)**
			x	x				10	0 to 100 % RH; -20 to +80 °C
			x	x	x			14	0 to 100 % RH; -40 to +60 °C
			x	x				22	0 to 100 % RH; -30 to +70 °C
x	x	x	x	x				34	0 to 100 % RH; 0 to 50 °C
	x	x	x	x		x		90	Digital output
								(4)	**Output**
x	x	x	x	x				005	4 to 20 mA / 4 to 20 mA
x	x	x						006	4 to 20 mA / temperature (T passive) Pt100 class A
x	x	x						007	4 to 20 mA / temperature (T passive) Pt1000 class A
					x			051	0 to 1 V / 0 to 1 V
x	x	x	x	x	x			065	0 to 10 V / 0 to 10 V
x	x	x						066	0 to 10 V / temperature (T passive) Pt100 class A
x	x	x						067	0 to 10 V / temperature (T passive) Pt1000 class A
	x	x	x	x		x		530	RS485 Modbus interface (configuration in plain text, see table "Interface parameters – digital output")
								(5)	**Extra codes**
x	x	x	x	x	x	x		000	None
x			x	x				793	Integrated LCD display (indoor version for humidity and temperature, alternating display)
x			x	x				794	Integrated LCD display (as extra code 793, but with temperature display in °F) (non-metric)
					x			847	Longer connecting cable – length 3 m

	(1)		(2)		(3)		(4)		(5)
Order code		-		-		-		/	
Order example	907021/11	-	2	-	34	-	065	/	000

Interface parameters – digital output (output "530")

Protocol		Baud rate		Parity		Stop bit(s)		Unit	
Modbus	(1)	9600	(A)	odd	(O)	1 stop bit	(1)	metric	(M)
		19200	(B)	even	(E)	2 stop bits	(2)	non-metric	(N)
		38400	(C)	no parity	(N)				

Note:
Please also observe the humidity working range and the admissable ambient temperatures (see "Technical data")
A third output is only available for multi-channel devices and not always possible for all device combinations.

JUMO GmbH & Co. KG
Delivery address: Mackenrodtstraße 14
36039 Fulda, Germany
Postal address: 36035 Fulda, Germany
Phone: +49 661 6003-0
Fax: +49 661 6003-607
Email: mail@jumo.net
Internet: www.jumo.net

JUMO Instrument Co. Ltd.
JUMO House
Temple Bank, Riverway
Harlow, Essex, CM20 2DY, UK
Phone: +44 1279 63 55 33
Fax: +44 1279 62 50 29
Email: sales@jumo.co.uk
Internet: www.jumo.co.uk

JUMO Process Control, Inc.
6733 Myers Road
East Syracuse, NY 13057, USA
Phone: +1 315 437 5866
Fax: +1 315 437 5860
Email: info.us@jumo.net
Internet: www.jumousa.com

Order details

				(1)	**Basic type**
			907021/80		CO_2 measuring probe indoor version
			907021/820		CO_2 measuring probe wall-mounted version
			907021/850		CO_2 measuring probe duct version
				(2)	**Version**
	x	x	4		CO_2 (1-channel output)
x		x	5		CO_2 and temperature (only for duct version 0 to 10 V)
x		x	6		CO_2 and temperature (T passive)
x			7		CO_2, temperature, and humidity (only for 0 to 10 V)
				(3)	**Measuring ranges / scaling (observe admissible ambient temperature)**
x	x	x	040		0 to 2000 ppm; 0 to 50 °C; 0 to 100 % RH
x	x	x	041		0 to 5000 ppm; 0 to 50 °C; 0 to 100 % RH
	x	x	042		0 to 10000 ppm; 0 to 50 °C; 0 to 100 % RH
				(4)	**Output**
x	x	x	005		4 to 20 mA / 4 to 20 mA
x			006		4 to 20 mA / temperature (T passive) Pt100 class A
x		x	007		4 to 20 mA / temperature (T passive) Pt1000 class A
x	x	x	065		0 to 10 V / 0 to 10 V
x			066		0 to 10 V / temperature (T passive) Pt100 class A
x		x	067		0 to 10 V / temperature (T passive) Pt1000 class A
				(5)	**Extra codes**
x	x	x	000		None
x			793		Integrated LCD display (indoor version for humidity and temperature, alternating display)
x			794		Integrated LCD display (as extra code 793, but with temperature display in °F) (non-metric)

	(1)		(2)		(3)		(4)		(5)
Order code		-		-		-		/	
Order example	907021/80	-	5	-	040	-	005	/	000

Note:
A second output is only available for multi-channel devices and is not always possible with all device combinations.

JUMO GmbH & Co. KG
Delivery address: Mackenrodtstraße 14
36039 Fulda, Germany
Postal address: 36035 Fulda, Germany
Phone: +49 661 6003-0
Fax: +49 661 6003-607
Email: mail@jumo.net
Internet: www.jumo.net

JUMO Instrument Co. Ltd.
JUMO House
Temple Bank, Riverway
Harlow, Essex, CM20 2DY, UK
Phone: +44 1279 63 55 33
Fax: +44 1279 62 50 29
Email: sales@jumo.co.uk
Internet: www.jumo.co.uk

JUMO Process Control, Inc.
6733 Myers Road
East Syracuse, NY 13057, USA
Phone: +1 315 437 5866
Fax: +1 315 437 5860
Email: info.us@jumo.net
Internet: www.jumousa.com

Stock versions

Order code	Part no.
907021/11-2-34-005/000	00436298
907021/11-2-34-005/793	00441452
907021/160-2-34-005/000	00630604
907021/161-2-34-005/000	00630609
907021/210-2-10-005/000	00630616
907021/210-2-14-005/000	00630624
907021/210-2-14-005/793	00630630
907021/211-2-10-005/000	00630646
907021/211-2-14-005/000	00630790
907021/60-2-14-051/000	00630791
907021/80-5-40-005/000	00578092
907021/80-5-40-005/793	00578093
907021/80-7-40-005/793	00578094
907021/820-4-41-005/000	00630792
907021/850-4-40-005/000	00630796
907021/850-6-40-007/000	00630797

Accessories

Description	Part no.
Plastic-grid membrane filter "HA010101"	00388181
Stainless steel sinter filter "HA010103"	00388183
Plastic-grid power-line filter "HA010106"	00389114
PTFE filter "HA010105"	00503575
Humidity sensor check 33 % RH	00332758
Humidity sensor check 53 % RH	00332759
Humidity sensor check 76 % RH	00332760
Mating coupling M12 × 1 for the case installation "HA010705"	00642185
Mating coupling M12 × 1 can be modified, IP67 "HA010707"	00642189
PUR extension cable M12 × 1 (shielded), length 2 m	00503577
PUR extension cable M12 × 1 (shielded), length 5 m	00503578
PUR extension cable M12 × 1 (shielded), length 10 m	00503579

JUMO GmbH & Co. KG
Delivery address: Mackenrodtstraße 14, 36039 Fulda, Germany
Postal address: 36035 Fulda, Germany
Phone: +49 661 6003-0
Fax: +49 661 6003-607
E-mail: mail@jumo.net
Internet: www.jumo.net

JUMO Instrument Co. Ltd.
JUMO House
Temple Bank, Riverway
Harlow - Essex CM20 2DY, UK
Phone: +44 1279 63 55 33
Fax: +44 1279 63 52 62
E-mail: sales@jumo.co.uk
Internet: www.jumo.co.uk

JUMO Process Control, Inc.
8 Technology Boulevard
Canastota, NY 13032, USA
Phone: 315-697-JUMO
1-800-554-JUMO
Fax: 315-697-5867
E-mail: info@jumo.us
Internet: www.jumo.us

Humidity and temperature transducers for industrial applications

- **measurement within the entire range from 0 to 100% RH**
- **temperature-resistant up to 180°C (depending on probe type)**
- **withstands pressures up to 100bar (depending on probe type)**
- **rugged metal housing, IP65 protection**
- **outstanding accuracy and stability**
- **graphical trend display and measurement history of the past year**
- **retraceability to NIST**
- **options: calculation and output of dew point, absolute humidity, mixing ratio, wet bulb temperature, enthalpy and water vapor pressure**

These transducers are the first choice for demanding industrial humidity measurements

These humidity and temperature transducers are designed to meet demanding industrial applications, where stable measurements and a large variety of adaptation options are essential.

Humidity sensor
The instrument series is based on 30 years of experience in industrial humidity measurement. The sensor measures accurately and reliably, as well as being resistant to contaminants and many chemicals.

Cleaning the sensor helps with impurities
In environments with a high concentration of chemicals and cleaning agents, sensor cleaning helps achieve lasting accuracy between calibrations. During the cleaning procedure, the sensor is briefly heated up to such an extent as to cause the foreign molecules deposited on it to vaporize. If measurements seem to drift, sensor cleaning can be called up manually at any time or activated automatically at freely programmable time intervals.

Graphical trend and development display
The transducers can optionally be supplied with a large numerical/graphical display on which the process development can be monitored easily and traced back for up to a year.

Data acquisition and transmission to a PC
The recorded measurement data can be visualized on the display or transferred to a PC using a Windows® program.

Easy integration
Extensive mounting accessories as well as the most diverse connection options to d.c. or a.c. voltage sources ensure that the transducers can be integrated without any problems.

Various outputs
The instrument series comes with up to three analog outputs. An electrical isolation between supply voltage and analog outputs can also be implemented. RS232/RS485 interfaces and relay outputs are available for digital communication.

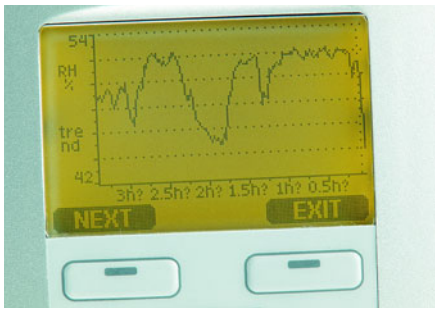

The display can be used to trace measurement trends back for up to a year.

Flexible calibration
The instruments are factory-calibrated at six humidity points. If required, fast 1-point calibration can easily be carried out on site using an optional measuring device (available on request). In addition, JUMO sensor checks are provided for a more accurate 2-point calibration. Alternatively, our customer service is at your disposal for multi-point calibration and adjustment. We recommend that this should be carried out at least once a year.

JUMO GmbH & Co. KG
Delivery address: Mackenrodtstraße 14, 36039 Fulda, Germany
Postal address: 36035 Fulda, Germany
Phone: +49 661 6003-0
Fax: +49 661 6003-607
E-mail: mail@jumo.net
Internet: www.jumo.net

JUMO Instrument Co. Ltd.
JUMO House
Temple Bank, Riverway
Harlow - Essex CM20 2DY, UK
Phone: +44 1279 63 55 33
Fax: +44 1279 63 52 62
E-mail: sales@jumo.co.uk
Internet: www.jumo.co.uk

JUMO Process Control, Inc.
8 Technology Boulevard
Canastota, NY 13032, USA
Phone: 315-697-JUMO
1-800-554-JUMO
Fax: 315-697-5867
E-mail: info@jumo.us
Internet: www.jumo.us

Technical data

Measured variables

Relative humidity

Measuring range: 0 – 100 % RH

Accuracy with regard to works standards, including non-linearity, hysteresis and repeatability

at 20 °C: ±1 % RH (0 – 90 % RH);
±1.7 % RH (90 – 100% RH)

at -20 to +40 °C: ±(1.0 + 0.8 % of measurement) % RH

at -40 to -20 °C, 40 to 180 °C: ±(1.5 + 1.5 % of measurement) % RH

Uncertainty of factory calibration[1] (20 °C)

for 0 – 40 % RH: ±0.6 % RH

for 40 – 97 % RH: ±1.0 % RH

Sensors

- for general applications: HUMICAP® 180R
- with heated probe: HUMICAP® 180RC

Response time ($t_{0.9}$) at 20 °C in stationary air:

- with grid filter: 8 sec
- with st. steel mesh filter: 20 sec
- with sintered filter: 40 sec

Temperature

Measuring range for type:

- 907023/331: -40 to +60 °C
- 907023/333: -40 to +80 °C/+120 °C
- 907023/334, 907023/335, 907023/337, 907023/338: -70 to +180 °C

Temperature sensor: Pt100 to EN 60 751

Accuracy at 20 °C: ±0.2 °C

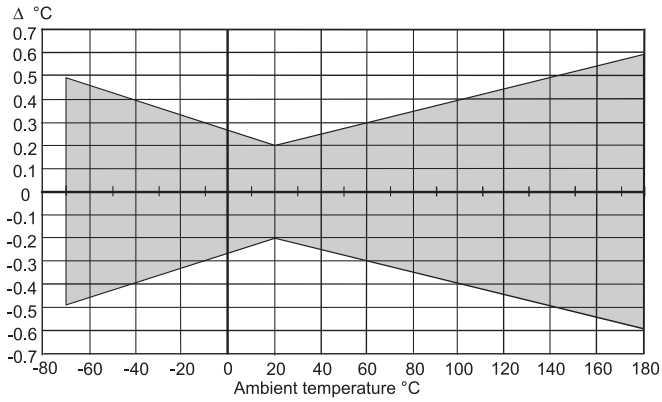

Accuracy over the entire range

Derived variables (option)

dew point temperature (Td), mixing ratio (x), absolute humidity (a), wet bulb temperature (Tw), enthalpy (h), water vapor pressure (pw)

Operating conditions

Operating temperature range at

- probes: as measuring ranges
- electronics: -40 to +60 °C
- with LC display: 0 to 60 °C

Operating pressure range for

- 907023/334: 0 – 10 MPa (0 – 100 bar)
- 907023/338: 0 – 4 MPa (0 – 40 bar)
- 907023/333, 907023/335, 907023/337: vapor-tight

EMC: as per EN 61 326-1:1997 + Annex 1:1998 + Annex 2:2001

Inputs/outputs

Operating voltage range: 10 – 35 V DC, 24 V AC

- with optional supply module: 100 – 240 V AC 50/60 Hz

Current drawn (20 °C, U_b = 24 V DC)

- when used with RS232C: ≤25 mA
- output 2x 0 – 1 V / 0 – 5 V / 0 – 10 V: ≤25 mA
- output 2x 0 – 20 mA: ≤60 mA
- with display and background lighting: 20 mA
- during sensor cleaning: 110 mA max.
- with probe heating (907023/337): 120 mA

Analog outputs (2 are standard, 3rd is optional)

- current output: 0 – 20 mA, 4 – 20 mA
- voltage output: 0 – 1 V, 0 – 5 V, 0 – 10 V

Accuracy of the analog outputs at 20 °C: ±0.05 % of full scale

Temperature drift of the analog outputs: ±0.005 % of full scale

External loads

- burden for current outputs: <500 Ω
- voltage output 0 – 1 V: >2 kΩ
- voltage output 0 – 5 V / 0 – 10 V: >10 kΩ

Maximum core cross-section: 0.5 mm²

Serial interface: RS232C, RS485 (option)

Relay outputs (option): 0.5 A, 250 V AC

Digital display: LCD with background lighting, graphical trend display of all variables

Menu languages: English, German, French, Spanish, Japanese, Swedish, Finnish

General data

Connection options

- cable gland: M 20x1.5 for 8 –11 mm dia. cable
- conduit fitting (option): M 20x1.5 / NPT 1/2"
- connector: M 12, 8-pole, type RKC8/9.M12
- 5 m connecting cable: M 12, 8-pole, type RKT8-282/5M

Probe cable diameter

- 907023/333: 6.0 mm
- all other probes: 5.5 mm

Housing material: G-AlSi 10 Mg (DIN 1725)

Enclosure protection: IP65

Weight: 1 to 2 kg, depending on the version

Alteration of individual specifications is possible.

[1] Defined as ±2 standard deviation limits.

JUMO GmbH & Co. KG
Delivery address: Mackenrodtstraße 14, 36039 Fulda, Germany
Postal address: 36035 Fulda, Germany
Phone: +49 661 6003-0
Fax: +49 661 6003-607
E-mail: mail@jumo.net
Internet: www.jumo.net

JUMO Instrument Co. Ltd.
JUMO House
Temple Bank, Riverway
Harlow - Essex CM20 2DY, UK
Phone: +44 1279 63 55 33
Fax: +44 1279 63 52 62
E-mail: sales@jumo.co.uk
Internet: www.jumo.co.uk

JUMO Process Control, Inc.
8 Technology Boulevard
Canastota, NY 13032, USA
Phone: 315-697-JUMO
1-800-554-JUMO
Fax: 315-697-5867
E-mail: info@jumo.us
Internet: www.jumo.us

Dimensions

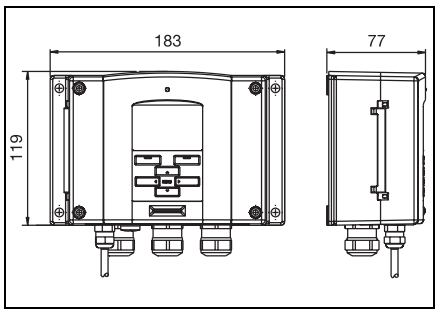

Housing, type 907023/330

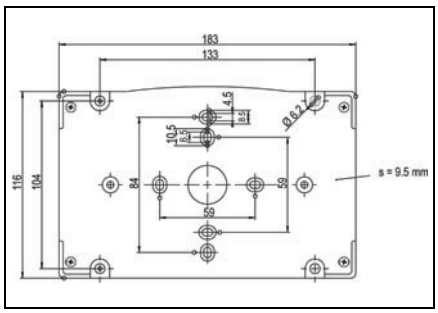

Plastic mounting plate or drilling template

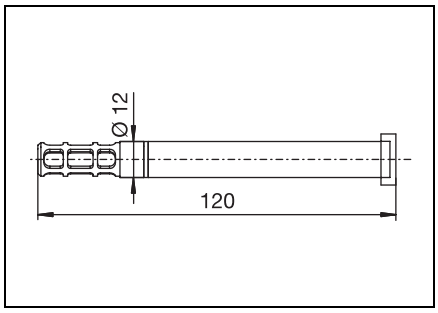

Probe, type 907023/331

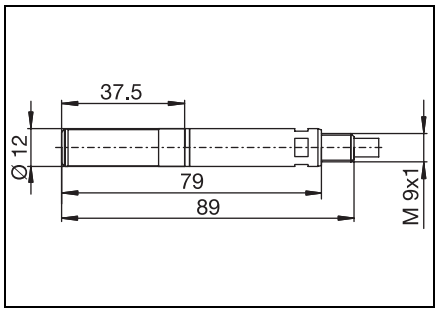

Probe, type 907023/333

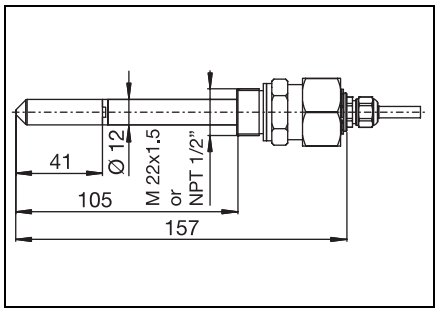

Probe, type 907023/334

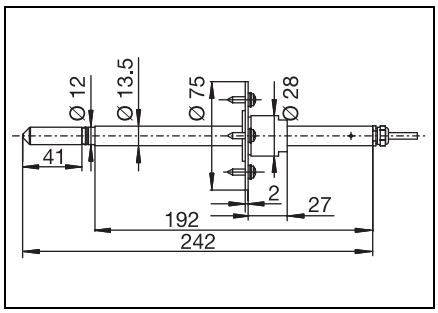

Probe, type 907023/335
(mounting flange is optional)

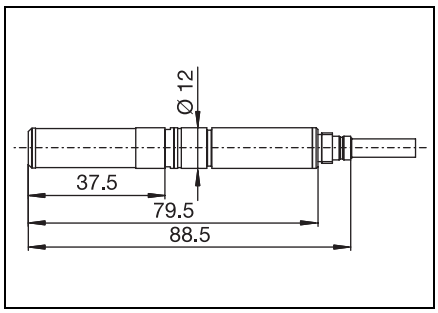

Probe, type 907023/337

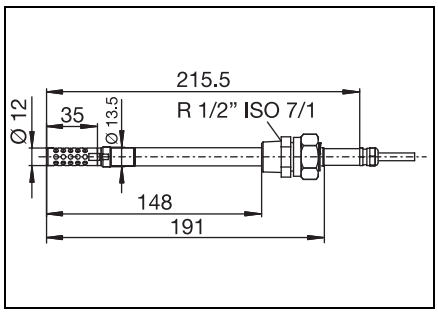

Probe, type 907023/338

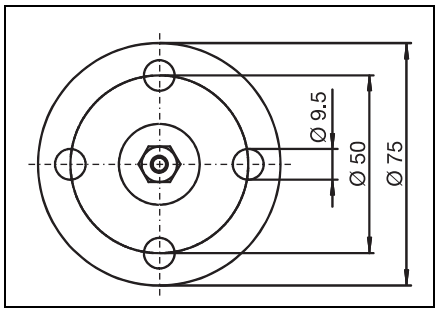

Mounting flange
(for probe types 907023/333, 907023/337, 907023/335 and additional T probe)

All dimensions in mm.

JUMO GmbH & Co. KG
Delivery address: Mackenrodtstraße 14, 36039 Fulda, Germany
Postal address: 36035 Fulda, Germany
Phone: +49 661 6003-0
Fax: +49 661 6003-607
E-mail: mail@jumo.net
Internet: www.jumo.net

JUMO Instrument Co. Ltd.
JUMO House
Temple Bank, Riverway
Harlow - Essex CM20 2DY, UK
Phone: +44 1279 63 55 33
Fax: +44 1279 63 52 62
E-mail: sales@jumo.co.uk
Internet: www.jumo.co.uk

JUMO Process Control, Inc.
8 Technology Boulevard
Canastota, NY 13032, USA
Phone: 315-697-JUMO
1-800-554-JUMO
Fax: 315-697-5867
E-mail: info@jumo.us
Internet: www.jumo.us

Humidity and temperature transducers for wall mounting Type 907023/331

- **for temperatures ranging from -40 to +60°C**
- **outstanding accuracy and stability**
- **graphical trend display and measurement history of the past year**
- **corrosion-resistant housing, IP65 rating**
- **retraceability to NIST**
- **applications include: clean rooms, pharmaceutical processes, greenhouses, swimming baths, museums and archives**

This transducer for wall mounting is highly suitable for monitoring humidity in rooms

This humidity and temperature transducer for wall mounting is especially suitable for the monitoring and control of HVAC installations. Compared with conventional wall-mounted probes for air-conditioning, this transducers offers

- better performance data,
- higher resistance to chemicals,
- state-of-the-art digital display functions,
- extensive range of supply options,
- more signal outputs,
- more humidity measurement variables,

Graphical trend and development display
The transducers can optionally be supplied with a large numerical/graphical display on which the process development can be monitored easily and traced back for up to a year.
The measurement history is particularly important for rooms that require stable climatic conditions, such as archives.
Maximum and minimum values of the past year can be graphically displayed in a simple manner.

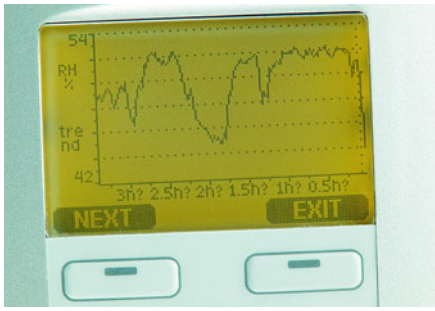

The display can be used to trace measurement trends back for up to a year.

Outputs and supply options for all needs
The output options include up to three analog outputs, RS232 and RS485 interfaces as well as alarm relays.

The possible supply voltage ranges from 10 to 35V DC. A wide-range power supply module ensures that the transducers can be connected to all supply voltages used around the globe.

The supply/signal cable can be passed through an opening in the housing base, which enables practical mounting, particularly in clean rooms.

JUMO GmbH & Co. KG
Delivery address: Mackenrodtstraße 14, 36039 Fulda, Germany
Postal address: 36035 Fulda, Germany
Phone: +49 661 6003-0
Fax: +49 661 6003-607
E-mail: mail@jumo.net
Internet: www.jumo.net

JUMO Instrument Co. Ltd.
JUMO House
Temple Bank, Riverway
Harlow - Essex CM20 2DY, UK
Phone: +44 1279 63 55 33
Fax: +44 1279 63 52 62
E-mail: sales@jumo.co.uk
Internet: www.jumo.co.uk

JUMO Process Control, Inc.
8 Technology Boulevard
Canastota, NY 13032, USA
Phone: 315-697-JUMO
1-800-554-JUMO
Fax: 315-697-5867
E-mail: info@jumo.us
Internet: www.jumo.us

Order details: Humidity and temperature transducers for wall mounting, type 907023/331

						(1)	**Basic type**
					907023/331		Humidity and temperature transducer for wall mounting
						(2)	**Version for wall mounting**
x					A		probe placed directly on housing
						(3)	**Additional temperature probe**
x					0		not for type 907023/331
						(4)	**Parameters**
x					A		RH + T
x					B		RH+T+Td+Tdf+a+x+Tw+ppm+pw+pws+h+dT
						(5)	**Display**
x					0		no display
x					1		graphics LCD with background lighting
						(6)	**Supply**
x					0		10 – 35V DC, 24V AC
x					1		electrical isolation for outputs 10 – 35V DC, 24V AC
x					2		universal AC supply (100 – 240V AC)
x					3		universal AC supply (100 – 240V AC) and US connecting cable
x					4		universal AC supply (100 – 240V AC) and EUR connecting cable
x					5		universal AC supply (100 – 240V AC) and UK connecting cable
x					6		universal AC supply (100 – 240V AC) and AUS connecting cable
						(7)	**Signal output (and serial RS232 interface or (optionally) communication module)**
x					1		analog output channel (Ch1+Ch2+Ch3) 4 – 20mA
x					2		analog output channel (Ch1+Ch2+Ch3) 0 – 20mA
x					3		analog output channel (Ch1+Ch2+Ch3) 0 – 1V
x					4		analog output channel (Ch1+Ch2+Ch3) 0 – 5V
x					5		analog output channel (Ch1+Ch2+Ch3) 0 – 10V
		Ch1	Ch2	Ch3		**(8)**	**Analog output signals for Ch1, Ch2 and Ch3**
x				A			no third analog output (choose A if not required)
x		B	B	B			RH (0 – 100% RH)
x		C	C	C			T (see (9) output range temp.)
x		D	D	D			Td (-20 to +100°C) (-4 to +212°F)
x		E	E	E			Tdf (-20 to +100°C) (-4 to +212°F)
x		F	F	F			a (0 – 600g/m³) (0 – 262gr/ft3)
x		G	G	G			Tw (0 to 100°C) (+32 to +212°F)
x		H	H	H			x (0 – 500g/kg d.a.) (0 – 3500gr/lb)
x		J	J	J			h (-40 to +1500kJ/kg) (-9.5 to +652.6Btu/lb)
x		K	K	K			ppm (0 – 5000) (0 – 5000)
x		L	L	L			pw (0 – 1000hPa) (0 – 14.5psi)
x		M	M	M			pws (0 – 1000hPa) (0 – 14.5psi)
x		N	N	N			dT (-10 to +50°C) (14 to +122°F)
x		X	X	X			Define special scaling Ch1: _____ Ch2: _____ Option Ch3: _____
						(9)	**Analog output range for temperature**
x				A			no temperature output (choose A if not required)
x				B			-40 to +60°C (-40 to +140°F)
x				F			-20 to +60°C (-4 to +140°F)
x				K			0 to 60°C (32 to 140°F)
x				X			Specifics: _____
						(10)	**Output unit**
x				1			metric
x				2			non-metric
						(11)	**Option for module slot 1** / **Option for module slot 2**
x			0	0			no module / no module
x			1	1			relay output / relay output
x			2	3			RS485 serial interface (electrically isolated) / third analog output (required if Ch3 (8) is selected)
						(12)	**Cable bushings**
x				A			cable gland M 20x1.5
x				B			conduit fitting NPT 1/2"
x				C			8-pole connector with 5m cable
x				D			8-pole mating connector equipped with screw terminals
						(13)	**Transducer mounting**
x				0			standard mounting
x				1			wall-mounting plate
x				2			pole installation kit
x				3			pole installation kit with rain shield
x				4			DIN rail kit
						(14)	**Humidity sensor type**
x				A			general application (standard) / HUMICAP® 180R
x				C			sensor with cleaning function / HUMICAP® 180RC
						(15)	**Sensor protection / filter**
x				A			PPS plastic grid with stainless steel mesh
x				B			PPS plastic grid
x				C			sintered stainless steel filter
						(16)	**Probe installation kit**
x				A			no installation kit
						(17)	**Operating instructions: language**
x				1			English
x				2			German
x				3			French
						(18)	**Calibration**
x				3A1			calibration to ISO 9001 standard (calibration report is available on request)

	(1)	(2)	(3)	(4)	(5)	(6)	(7)	(8)	(9)	(10)	(11)	(12)	(13)	(14)	(15)	(16)	(17)	(18)
Order code																		
Order example	907023/331	A	0	A	1	0	1	BCA	B	1	00	A	0	A	A	A	2	3A1

JUMO GmbH & Co. KG
Delivery address: Mackenrodtstraße 14, 36039 Fulda, Germany
Postal address: 36035 Fulda, Germany
Phone: +49 661 6003-0
Fax: +49 661 6003-607
E-mail: mail@jumo.net
Internet: www.jumo.net

JUMO Instrument Co. Ltd.
JUMO House
Temple Bank, Riverway
Harlow - Essex CM20 2DY, UK
Phone: +44 1279 63 55 33
Fax: +44 1279 63 52 62
E-mail: sales@jumo.co.uk
Internet: www.jumo.co.uk

JUMO Process Control, Inc.
8 Technology Boulevard
Canastota, NY 13032, USA
Phone: 315-697-JUMO
1-800-554-JUMO
Fax: 315-697-5867
E-mail: info@jumo.us
Internet: www.jumo.us

Humidity and temperature transducers for ducts and locations where space is tight, Type 907023/333

- **for temperatures ranging from -40 to +80°C/+120°C**
- **cable probe for remote measurement, for demanding HVAC applications**
- **outstanding accuracy and stability**
- **short response times thanks to low thermal mass**
- **graphical trend display and measurement history of the past year**
- **corrosion-resistant housing, IP65 rating**
- **retraceable to NIST**
- **applications include: clean rooms, pharmaceutical processes, greenhouses and climatic chambers**

Transducer with a small cable probe for ducts and locations where space is tight

This humidity and temperature transducer is a universal measuring device for applications that require a small, thin cable probe.

Flexible installation
A duct installation kit (consisting of aluminium flange, screw fitting and support rod) is available for installing the probe in tubes, ducts or through walls.
The probe cable is flexible and comes in lengths of 2m, 5m and 10m.
The user can choose between two range options, for ambient temperatures up to 80°C or up to 120°C.

Duct installation kit

For outside installations, the optional radiation shield protects the probe from sun and rain. It can be mounted on a pole, a beam, or directly on a wall.

For moderate humidity and temperature
The transducers are mainly used for the control and monitoring of HVAC systems, for example in clean rooms, pharmaceutical process and greenhouses.

However, in environments with a predominantly high humidity, we recommend type 907023/337 with a heated, vapor-tight stainless steel probe.

Graphical trend and development display
The transducers can optionally be supplied with a large numerical/graphical display on which the process development can be monitored easily and traced back for up to a year.
The measurement history is particularly important for rooms that require stable climatic conditions, such as clean rooms. Maximum and minimum values of the past year can be graphically displayed in a simple manner.

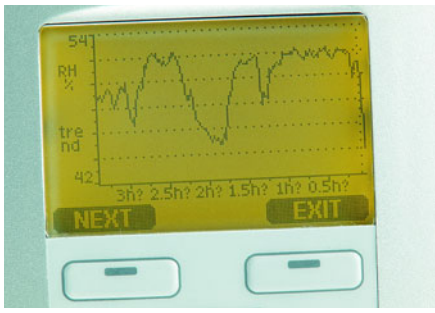

The display can be used to trace measurement trends back for up to a year.

Outputs and supply options for all needs
The output options include up to three analog outputs, RS232 and RS485 interfaces as well as alarm relays.

The possible supply voltage ranges from 10 to 35V DC. A wide-range power supply module ensures that the transducers can be connected to all supply voltages used around the globe.

The supply/signal cable can be passed through an opening in the housing base, which enables practical mounting, particularly in clean rooms.

JUMO GmbH & Co. KG
Delivery address: Mackenrodtstraße 14, 36039 Fulda, Germany
Postal address: 36035 Fulda, Germany
Phone: +49 661 6003-0
Fax: +49 661 6003-607
E-mail: mail@jumo.net
Internet: www.jumo.net

JUMO Instrument Co. Ltd.
JUMO House
Temple Bank, Riverway
Harlow - Essex CM20 2DY, UK
Phone: +44 1279 63 55 33
Fax: +44 1279 63 52 62
E-mail: sales@jumo.co.uk
Internet: www.jumo.co.uk

JUMO Process Control, Inc.
8 Technology Boulevard
Canastota, NY 13032, USA
Phone: 315-697-JUMO
1-800-554-JUMO
Fax: 315-697-5867
E-mail: info@jumo.us
Internet: www.jumo.us

Order details: Humidity and temperature transducers for ducts and locations where space is tight, type 907023/333

					(1)	**Basic type**	
				907023/333		Humidity and temperature transducer for ducts and locations where space is tight	
					(2)	**Sensor cable / cable length**	
x				E		2m cable, 80°C	
x				F		5m cable, 80°C	
x				G		10m cable, 80°C	
x				4		2m cable, 120°C	
x				5		5m cable, 120°C	
x				6		10m cable, 120°C	
					(3)	**Additional temperature probe**	
x				0		not for type 907023/333	
					(4)	**Parameters**	
x				A		RH + T	
x				B		RH+T+Td+Tdf+a+x+Tw+ppm+pw+pws+h+dT	
					(5)	**Display**	
x				0		no display	
x				1		graphics LCD with background lighting	
					(6)	**Supply**	
x				0		10 – 35V DC, 24V AC	
x				1		electrical isolation for outputs 10 – 35V DC, 24V AC	
x				2		universal AC supply (100 – 240V AC)	
x				3		universal AC supply (100 – 240V AC) and US connecting cable	
x				4		universal AC supply (100 – 240V AC) and EUR connecting cable	
x				5		universal AC supply (100 – 240V AC) and UK connecting cable	
x				6		universal AC supply (100 – 240V AC) and AUS connecting cable	
					(7)	**Signal output (and serial RS232 interface or (optionally) communication module)**	
x				1		analog output channel (Ch1+Ch2+Ch3) 4 – 20mA	
x				2		analog output channel (Ch1+Ch2+Ch3) 0 – 20mA	
x				3		analog output channel (Ch1+Ch2+Ch3) 0 – 1V	
x				4		analog output channel (Ch1+Ch2+Ch3) 0 – 5V	
x				5		analog output channel (Ch1+Ch2+Ch3) 0 – 10V	
	Ch1	Ch2		Ch3	**(8)**	**Analog output signals for Ch1, Ch2 and Ch3**	
x				A		no third analog output (choose A if not required)	
x	B	B		B		RH	(0 — 100% RH)
x	C	C		C		T	(see (9) output range temp.)
x	D	D		D		Td (-20 to +100°C)	(-4 to +212°F)
x	E	E		E		Tdf (-20 to +100°C)	(-4 to +212°F)
x	F	F		F		a (0 – 600g/m³)	(0 – 262gr/ft3)
x	G	G		G		Tw (0 to 100°C)	(+32 to +212°F)
x	H	H		H		x (0 – 500g/kg d.a.)	(0 – 3500gr/lb)
x	J	J		J		h (-40 to +1500kJ/kg)	(-9.5 to +652.6Btu/lb)
x	K	K		K		ppm (0 – 5000)	(0 – 5000)
x	L	L		L		pw (0 – 1000hPa)	(0 – 14.5psi)
x	M	M		M		pws (0 – 1000hPa)	(0 – 14.5psi)
x	N	N		N		dT (-10 to +50°C)	(14 to +122°F)
x	X	X		X		Define special scaling	Ch1: _____ Ch2: _____ Option Ch3: _____
					(9)	**Analog output range for temperature**	
x				A		no temperature output (choose A if not required)	
x				B		-40 to +60°C	(-40 to +140°F)
x				C		-40 to +80°C	(-40 to +176°F)
x				D		-40 to +120°C	(-40 to +248°F)
x				F		-20 to +60°C	(-4 to +140°F)
x				G		-20 to +80°C	(-4 to +176°F)
x				H		-20 to +120°C	(-4 to +248°F)
x				K		0 to 60°C	(32 to 140°F)
x				M		0 to 120°C	(32 to 248°F)
x				X		Specifics: _____	
					(10)	**Output unit**	
x				1		metric	
x				2		non-metric	
					(11)	**Option for module slot 1**	**Option for module slot 2**
x			0	0		no module	no module
x			1	1		relay output	relay output
x			2	3		RS485 serial interface (electrically isolated)	third analog output (required if Ch3 (8) is selected)
					(12)	**Cable bushings**	
x				A		cable gland M 20x1.5	
x				B		conduit fitting NPT 1/2"	
x				C		8-pole connector with 5m cable	
x				D		8-pole mating connector equipped with screw terminals	
					(13)	**Transducer mounting**	
x				0		standard mounting	
x				1		wall-mounting plate	
x				2		pole installation kit	
x				3		pole installation kit with rain shield	
x				4		DIN rail kit	
					(14)	**Humidity sensor type**	
x				A		general application (standard)	HUMICAP® 180R
x				C		sensor with cleaning function	HUMICAP® 180RC
					(15)	**Sensor protection / filter**	
x				A		PPS plastic grid with stainless steel mesh	
x				B		PPS plastic grid	
x				C		sintered stainless steel filter	
					(16)	**Probe installation kit**	
x				A		no installation kit	
x				C		duct installation kit	
x				D		cable gland AGRO	
					(17)	**Operating instructions: language**	
x				1		English	
x				2		German	
x				3		French	
					(18)	**Calibration**	
x				3A1		calibration to ISO 9001 standard (calibration report is available on request)	

	(1)	(2)	(3)	(4)	(5)	(6)	(7)	(8)	(9)	(10)	(11)	(12)	(13)	(14)	(15)	(16)	(17)	(18)
Order code																		
Order example	907023/333	E	0	A	1	0	1	BCA	G	1	00	A	0	A	A	A	2	3A1

JUMO GmbH & Co. KG
Delivery address: Mackenrodtstraße 14, 36039 Fulda, Germany
Postal address: 36035 Fulda, Germany
Phone: +49 661 6003-0
Fax: +49 661 6003-607
E-mail: mail@jumo.net
Internet: www.jumo.net

JUMO Instrument Co. Ltd.
JUMO House
Temple Bank, Riverway
Harlow - Essex CM20 2DY, UK
Phone: +44 1279 63 55 33
Fax: +44 1279 63 52 62
E-mail: sales@jumo.co.uk
Internet: www.jumo.co.uk

JUMO Process Control, Inc.
8 Technology Boulevard
Canastota, NY 13032, USA
Phone: 315-697-JUMO
1-800-554-JUMO
Fax: 315-697-5867
E-mail: info@jumo.us
Internet: www.jumo.us

Humidity and temperature transducers for high-pressure and vacuum applications, Type 907023/334

- **for temperatures ranging from -70 to +180°C**
- **for measurements within the pressure range from 0 – 100bar**
- **with a fitting element in ISO or NPT version**
- **outstanding accuracy and stability**
- **graphical trend display and measurement history of the past year**
- **corrosion-resistant housing, IP65 rating**
- **retraceable to NIST**
- **applications include: high-pressure lines or vacuum chambers**

Transducer for high-pressure lines or vacuum chambers

This humidity and temperature transducer is designed for humidity measurements in high-pressure lines or vacuum chambers. The measurement probe is constructed in such a way as to ensure gas-tight mounting.
For correct measurement results, process pressures that deviate from the normal ambient air pressure can be entered in the transducer memory via a serial interface or the operator panel.

Humidity sensor
The instrument series is based on 30 years of experience in industrial humidity measurement.
The humidity sensor enables precise and reliable measurements and is resistant to contamination and a large number of chemicals.

Graphical trend and development display
The instrument series can optionally be supplied with a large numerical/graphical display on which the process development can easily be monitored and traced back for up to a year.
The measurement data can be transferred to a PC for further processing, and for copying to other programs.

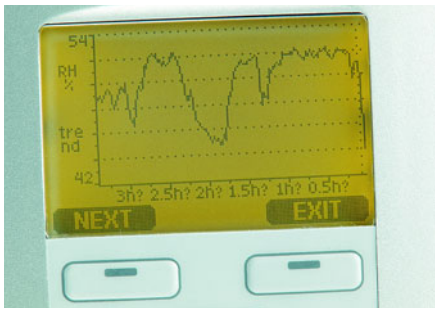

With the help of the display, the user is able to trace measurement trends back for up to a year.

Outputs and supply options for all needs
The output options include up to three analog outputs, RS232 and RS485 interfaces as well as alarm relays.

The possible supply voltage ranges from 10 to 35V DC. A wide-range power supply module ensures that the transducers can be connected to all supply voltages used around the globe.

The supply/signal cable can also be passed through an opening in the housing base.

JUMO GmbH & Co. KG
Delivery address: Mackenrodtstraße 14, 36039 Fulda, Germany
Postal address: 36035 Fulda, Germany
Phone: +49 661 6003-0
Fax: +49 661 6003-607
E-mail: mail@jumo.net
Internet: www.jumo.net

JUMO Instrument Co. Ltd.
JUMO House
Temple Bank, Riverway
Harlow - Essex CM20 2DY, UK
Phone: +44 1279 63 55 33
Fax: +44 1279 63 52 62
E-mail: sales@jumo.co.uk
Internet: www.jumo.co.uk

JUMO Process Control, Inc.
8 Technology Boulevard
Canastota, NY 13032, USA
Phone: 315-697-JUMO
1-800-554-JUMO
Fax: 315-697-5867
E-mail: info@jumo.us
Internet: www.jumo.us

Order details: Humidity and temperature transducers for high-pressure and vacuum applications, type 907023/334

						(1)	**Basic type**
							907023/334 Humidity and temperature transducer for high-pressure and vacuum applications
						(2)	**Sensor cable / cable length**
x					H		2m cable
x					J		5m cable
x					K		10m cable
						(3)	**Additional temperature probe**
x					0		not for type 907023/334
						(4)	**Parameters**
x					A		RH + T
x					B		RH+T+Td+Tdf+a+x+Tw+ppm+pw+pws+h+dT
						(5)	**Display**
x					0		no display
x					1		graphics LCD with background lighting
						(6)	**Supply**
x					0		10 – 35V DC, 24V AC
x					1		electrical isolation for outputs 10 – 35V DC, 24V AC
x					2		universal AC supply (100 – 240V AC)
x					3		universal AC supply (100 – 240V AC) and US connecting cable
x					4		universal AC supply (100 – 240V AC) and EUR connecting cable
x					5		universal AC supply (100 – 240V AC) and UK connecting cable
x					6		universal AC supply (100 – 240V AC) and AUS connecting cable
						(7)	**Signal output (and serial RS232 interface or (optionally) communication module)**
x					1		analog output channel (Ch1+Ch2+Ch3) 4 – 20mA
x					2		analog output channel (Ch1+Ch2+Ch3) 0 – 20mA
x					3		analog output channel (Ch1+Ch2+Ch3) 0 – 1V
x					4		analog output channel (Ch1+Ch2+Ch3) 0 – 5V
x					5		analog output channel (Ch1+Ch2+Ch3) 0 – 10V
	Ch1	Ch2			Ch3	**(8)**	**Analog output signals for Ch1, Ch2 and Ch3**
x					A		no third analog output (choose A if not required)
x	B	B			B		RH (0 – 100% RH)
x	C	C			C		T (see (9) output range temp.)
x	D	D			D		Td (-20 to +100°C) (-4 to +212°F)
x	E	E			E		Tdf (-20 to +100°C) (-4 to +212°F)
x	F	F			F		a (0 – 600g/m³) (0 – 262gr/ft3)
x	G	G			G		Tw (0 to 100°C) (+32 to +212°F)
x	H	H			H		x (0 – 500g/kg d.a.) (0 – 3500gr/lb)
x	J	J			J		h (-40 to +1500kJ/kg) (-9.5 to +652.6Btu/lb)
x	K	K			K		ppm (0 – 5000) (0 – 5000)
x	L	L			L		pw (0 – 1000hPa) (0 – 14.5psi)
x	M	M			M		pws (0 – 1000hPa) (0 – 14.5psi)
x	N	N			N		dT (-10 to +50°C) (14 to +122°F)
x	X	X			X		Define special scaling Ch1: _____ Ch2: _____ Option Ch3: _____
						(9)	**Analog output range for temperature**
x					A		no temperature output (choose A if not required)
x					B		-40 to +60°C (-40 to +140°F)
x					C		-40 to +80°C (-40 to +176°F)
x					D		-40 to +120°C (-40 to +248°F)
x					E		-40 to +180°C (-40 to +356°F)
x					F		-20 to +60°C (-4 to +140°F)
x					G		-20 to +80°C (-4 to +176°F)
x					H		-20 to +120°C (-4 to +248°F)
x					J		-20 to +180°C (-4 to +356°F)
x					K		0 to 60°C (32 to 140°F)
x					L		0 to 100°C (32 to 212°F)
x					M		0 to 120°C (32 to 248°F)
x					N		0 to 180°C (32 to 356°F)
x					P		-60 to +60°C (-76 to +140°F)
x					X		Specifics: _____
						(10)	**Output unit**
x					1		metric
x					2		non-metric
						(11)	**Option for module slot 1** / **Option for module slot 2**
x				0	0		no module / no module
x				1	1		relay output / relay output
x				2	3		RS485 serial interface (electrically isolated) / third analog output (required if Ch3 (8) is selected)
						(12)	**Cable bushings**
x					A		cable gland M 20x1.5
x					B		conduit fitting NPT 1/2"
x					C		8-pole connector with 5m cable
x					D		8-pole mating connector equipped with screw terminals
						(13)	**Transducer mounting**
x					0		standard mounting
x					1		wall-mounting plate
x					2		pole installation kit
x					3		pole installation kit with rain shield
x					4		DIN rail kit
						(14)	**Humidity sensor type**
x					A		general application (standard) / HUMICAP® 180R
x					C		sensor with cleaning function / HUMICAP® 180RC
						(15)	**Sensor protection / filter**
x					A		PPS plastic grid with stainless steel mesh
x					B		PPS plastic grid
x					C		sintered stainless steel filter
x					D		stainless steel grid
						(16)	**Probe installation kit**
x					E		fitting element M 22x1.5
x					F		fitting element NPT 1/2"
						(17)	**Operating instructions: language**
x					1		English
x					2		German
x					3		French
						(18)	**Calibration**
x					3A1		calibration to ISO 9001 standard (calibration report is available on request)

	(1)	(2)	(3)	(4)	(5)	(6)	(7)	(8)	(9)	(10)	(11)	(12)	(13)	(14)	(15)	(16)	(17)	(18)
Order code	____ -	___ -	___ -	___ -	___ -	___ -	___ -	___ -	___ -	___ -	___ -	___ -	___ -	___ -	___ -	___ -	___ -	___
Order example	907023/334 -	H -	0 -	A -	1 -	0 -	1 -	BCA -	B -	1 -	00 -	A -	0 -	A -	A -	E -	2 -	3A1

JUMO GmbH & Co. KG
Delivery address: Mackenrodtstraße 14, 36039 Fulda, Germany
Postal address: 36035 Fulda, Germany
Phone: +49 661 6003-0
Fax: +49 661 6003-607
E-mail: mail@jumo.net
Internet: www.jumo.net

JUMO Instrument Co. Ltd.
JUMO House
Temple Bank, Riverway
Harlow - Essex CM20 2DY, UK
Phone: +44 1279 63 55 33
Fax: +44 1279 63 52 62
E-mail: sales@jumo.co.uk
Internet: www.jumo.co.uk

JUMO Process Control, Inc.
8 Technology Boulevard
Canastota, NY 13032, USA
Phone: 315-697-JUMO
1-800-554-JUMO
Fax: 315-697-5867
E-mail: info@jumo.us
Internet: www.jumo.us

Humidity and temperature transducers for high temperatures, Type 907023/335

- **for temperatures ranging from -70 to +180°C**
- **long stainless steel probe**
- **mounting flange in stainless steel (option)**
- **variable mounting depth**
- **outstanding accuracy and stability**
- **graphical trend display and measurement history of the past year**
- **corrosion-resistant housing, IP65 rating**
- **retraceable to NIST**
- **applications include: hot-air drying processes**

Transducer with a rugged stainless steel probe – ideal for high flow velocities in drying processes

This humidity and temperature transducer is equipped with a long stainless steel probe that is especially designed for high-temperature applications.

Probe design for high flow velocity
The probe is designed to withstand high mechanical stress and high flow velocity.
This transducer is therefore highly suitable for measurements in pipes, for which smaller probes are not rugged enough.
Application example: hot-air drying processes.

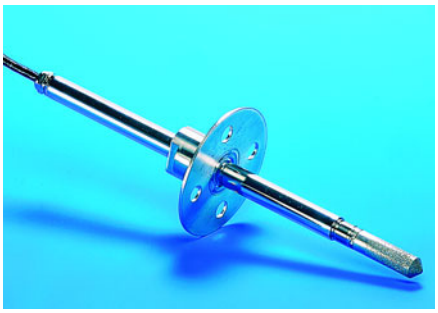

Thanks to the mounting flange in stainless steel, probes can be mounted at various depths.

Graphical trend and development display
The instrument series can optionally be supplied with a large numerical/graphical display on which the process development can easily be monitored and traced back for up to a year.
The measurement data can be transferred to a PC for further processing, and for copying to other programs.

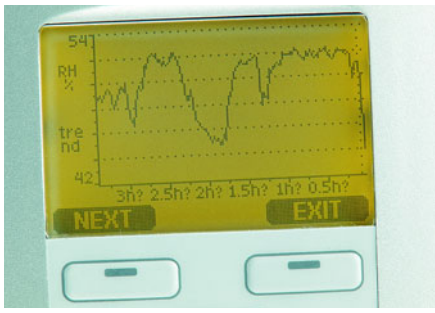

With the help of the display, the user is able to trace measurement trends back for up to a year.

Outputs and supply options for all needs
The output options include up to three analog outputs, RS232 and RS485 interfaces as well as alarm relays.

The possible supply voltage ranges from 10 to 35V DC. A wide-range power supply module ensures that the transducers can be connected to all supply voltages used around the globe.

Humidity sensor
The humidity sensor enables precise and reliable measurements as well as being resistant to contaminants and many chemicals.

JUMO GmbH & Co. KG
Delivery address: Mackenrodtstraße 14, 36039 Fulda, Germany
Postal address: 36035 Fulda, Germany
Phone: +49 661 6003-0
Fax: +49 661 6003-607
E-mail: mail@jumo.net
Internet: www.jumo.net

JUMO Instrument Co. Ltd.
JUMO House
Temple Bank, Riverway
Harlow - Essex CM20 2DY, UK
Phone: +44 1279 63 55 33
Fax: +44 1279 63 52 62
E-mail: sales@jumo.co.uk
Internet: www.jumo.co.uk

JUMO Process Control, Inc.
8 Technology Boulevard
Canastota, NY 13032, USA
Phone: 315-697-JUMO
1-800-554-JUMO
Fax: 315-697-5867
E-mail: info@jumo.us
Internet: www.jumo.us

Order details: Humidity and temperature transducers for high temperatures, type 907023/335

						(1)	**Basic type**
							907023/335 Humidity and temperature transducer for high temperatures
						(2)	**Sensor cable / cable length**
x					L		2m cable
x					M		5m cable
x					N		10m cable
						(3)	**Additional temperature probe**
x					0		not for type 907023/335
						(4)	**Parameters**
x					A		RH + T
x					B		RH+T+Td+Tdf+a+x+Tw+ppm+pw+pws+h+dT
						(5)	**Display**
x					0		no display
x					1		graphics LCD with background lighting
						(6)	**Supply**
x					0		10 — 35V DC, 24V AC
x					1		electrical isolation for outputs 10 – 35V DC, 24V AC
x					2		universal AC supply (100 – 240V AC)
x					3		universal AC supply (100 – 240V AC) and US connecting cable
x					4		universal AC supply (100 – 240V AC) and EUR connecting cable
x					5		universal AC supply (100 – 240V AC) and UK connecting cable
x					6		universal AC supply (100 – 240V AC) and AUS connecting cable
						(7)	**Signal output (and serial RS232 interface or (optionally) communication module)**
x					1		analog output channel (Ch1+Ch2+Ch3) 4 – 20mA
x					2		analog output channel (Ch1+Ch2+Ch3) 0 – 20mA
x					3		analog output channel (Ch1+Ch2+Ch3) 0 – 1V
x					4		analog output channel (Ch1+Ch2+Ch3) 0 – 5V
x					5		analog output channel (Ch1+Ch2+Ch3) 0 – 10V
		Ch1	Ch2	Ch3		**(8)**	**Analog output signals for Ch1, Ch2 and Ch3**
x				A			no third analog output (choose A if not required)
x		B	B	B			RH (0 – 100% RH)
x		C	C	C			T (see (9) output range temp.)
x		D	D	D			Td (-20 to +100°C) (-4 to +212°F)
x		E	E	E			Tdf (-20 to +100°C) (-4 to +212°F)
x		F	F	F			a (0 – 600g/m³) (0 – 262gr/ft3)
x		G	G	G			Tw (0 to 100°C) (+32 to +212°F)
x		H	H	H			x (0 – 500g/kg d.a.) (0 – 3500gr/lb)
x		J	J	J			h (-40 to +1500kJ/kg) (-9.5 to +652.6Btu/lb)
x		K	K	K			ppm (0 – 5000) (0 – 5000)
x		L	L	L			pw (0 – 1000hPa) (0 – 14.5psi)
x		M	M	M			pws (0 – 1000hPa) (0 – 14.5psi)
x		N	N	N			dT (-10 to +50°C) (14 to +122°F)
x		X	X	X			Define special scaling Ch1: _____ Ch2: _____ Option Ch3: _____
						(9)	**Analog output range for temperature**
x					A		no temperature output (choose A if not required)
x					B		-40 to +60°C (-40 to +140°F)
x					C		-40 to +80°C (-40 to +176°F)
x					D		-40 to +120°C (-40 to +248°F)
x					E		-40 to +180°C (-40 to +356°F)
x					F		-20 to +60°C (-4 to +140°F)
x					G		-20 to +80°C (-4 to +176°F)
x					H		-20 to +120°C (-4 to +248°F)
x					J		-20 to +180°C (-4 to +356°F)
x					K		0 to 60°C (32 to 140°F)
x					L		0 to 100°C (32 to 212°F)
x					M		0 to 120°C (32 to 248°F)
x					N		0 to 180°C (32 to 356°F)
x					P		-60 to +60°C (-76 to +140°F)
x					X		Specifics: _____
						(10)	**Output unit**
x					1		metric
x					2		non-metric
						(11)	**Option for module slot 1** / **Option for module slot 2**
x				0	0		no module / no module
x				1	1		relay output / relay output
x				2	3		RS485 serial interface (electrically isolated) / third analog output (required if Ch3 (8) is selected)
						(12)	**Cable bushings**
x					A		cable gland M 20x1.5
x					B		conduit fitting NPT 1/2"
x					C		8-pole connector with 5m cable
x					D		8-pole mating connector equipped with screw terminals
						(13)	**Transducer mounting**
x					0		standard mounting
x					1		wall-mounting plate
x					2		pole installation kit
x					3		pole installation kit with rain shield
x					4		DIN rail kit
						(14)	**Humidity sensor type**
x					A		general application (standard) / HUMICAP® 180R
x					C		sensor with cleaning function / HUMICAP® 180RC
						(15)	**Sensor protection / filter**
x					A		PPS plastic grid with stainless steel mesh
x					B		PPS plastic grid
x					C		sintered stainless steel filter
x					D		stainless steel grid
						(16)	**Probe installation kit**
x					A		no installation kit
x					G		mounting flange
						(17)	**Operating instructions: language**
x					1		English
x					2		German
x					3		French
						(18)	**Calibration**
x					3A1		calibration to ISO 9001 standard (calibration report is available on request)

	(1)	(2)	(3)	(4)	(5)	(6)	(7)	(8)	(9)	(10)	(11)	(12)	(13)	(14)	(15)	(16)	(17)	(18)
Order code	☐ -	☐ -	☐ -	☐ -	☐ -	☐ -	☐ -	☐☐☐ -	☐ -	☐ -	☐☐ -	☐ -	☐ -	☐ -	☐ -	☐ -	☐ -	☐☐☐
Order example	907023/335 -	L -	0 -	A -	1 -	0 -	1 -	BCA -	J -	1 -	00 -	A -	0 -	A -	A -	G -	2 -	3A1

JUMO GmbH & Co. KG
Delivery address: Mackenrodtstraße 14, 36039 Fulda, Germany
Postal address: 36035 Fulda, Germany
Phone: +49 661 6003-0
Fax: +49 661 6003-607
E-mail: mail@jumo.net
Internet: www.jumo.net

JUMO Instrument Co. Ltd.
JUMO House
Temple Bank, Riverway
Harlow - Essex CM20 2DY, UK
Phone: +44 1279 63 55 33
Fax: +44 1279 63 52 62
E-mail: sales@jumo.co.uk
Internet: www.jumo.co.uk

JUMO Process Control, Inc.
8 Technology Boulevard
Canastota, NY 13032, USA
Phone: 315-697-JUMO
1-800-554-JUMO
Fax: 315-697-5867
E-mail: info@jumo.us
Internet: www.jumo.us

Humidity and temperature transducers with a vapor-tight probe, Type 907023/337A

- **for temperatures ranging from -70 to +180°C**
- **for industrial and meteorological applications with moderate humidity**
- **small, vapor-tight stainless steel probe for remote measurement**
- **outstanding accuracy and stability**
- **graphical trend display and measurement history of the past year**
- **corrosion-resistant housing, IP65 rating**
- **retraceable to NIST**

Transducer for the most demanding process conditions, and for meteorological applications

This humidity and temperature transducer is designed for the most demanding applications.
The stainless steel probe is small and slim, which means that it can be easily installed in locations where space is tight.
Compared with type 907023/333, the probe for this transducer is vapor-tight and covers a much wider temperature range.

For moderate humidities
The transducer has been conceived for demanding measurement tasks, but with the atmospheric humidity still within the moderate range.
For high-humidity applications, however, we recommend type 907023/337B with a heated probe.

Numerous mounting options
Vapor-tight mounting in a duct or pipe can be implemented using Swagelok screw fittings. A duct installation kit and, in addition, a mounting kit for meteorological outdoor measurements are available as an option.

Duct installation kit

Graphical trend and development display
The instrument series can optionally be supplied with a large numerical/graphical display on which the process development can easily be monitored and traced back for up to a year.
The measurement data can be transferred to a PC for further processing, and for copying to other programs.

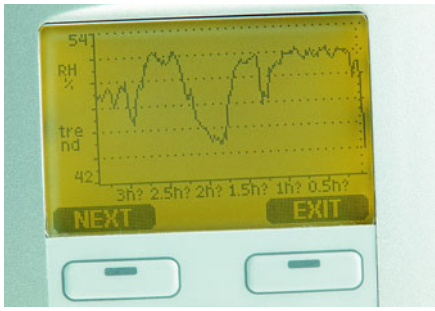

With the help of the display, the user is able to trace measurement trends back for up to a year.

JUMO GmbH & Co. KG
Delivery address: Mackenrodtstraße 14, 36039 Fulda, Germany
Postal address: 36035 Fulda, Germany
Phone: +49 661 6003-0
Fax: +49 661 6003-607
E-mail: mail@jumo.net
Internet: www.jumo.net

JUMO Instrument Co. Ltd.
JUMO House
Temple Bank, Riverway
Harlow - Essex CM20 2DY, UK
Phone: +44 1279 63 55 33
Fax: +44 1279 63 52 62
E-mail: sales@jumo.co.uk
Internet: www.jumo.co.uk

JUMO Process Control, Inc.
8 Technology Boulevard
Canastota, NY 13032, USA
Phone: 315-697-JUMO
1-800-554-JUMO
Fax: 315-697-5867
E-mail: info@jumo.us
Internet: www.jumo.us

Order details: Humidity and temperature transducers with a vapor-tight probe, type 907023/337A

						(1)	**Basic type**
						907023/337A	Humidity and temperature transducer with a vapor-tight probe
						(2)	**Sensor cable / cable length**
x					S		2m cable
x					T		5m cable
x					U		10m cable
						(3)	**Additional temperature probe**
x					0		not for type 907023/337A
						(4)	**Parameters**
x					A		RH + T
x					B		RH+T+Td+Tdf+a+x+Tw+ppm+pw+pws+h+dT
						(5)	**Display**
x					0		no display
x					1		graphics LCD with background lighting
						(6)	**Supply**
x					0		10 – 35V DC, 24V AC
x					1		electrical isolation for outputs 10 – 35V DC, 24V AC
x					2		universal AC supply (100 – 240V AC)
x					3		universal AC supply (100 – 240V AC) and US connecting cable
x					4		universal AC supply (100 – 240V AC) and EUR connecting cable
x					5		universal AC supply (100 – 240V AC) and UK connecting cable
x					6		universal AC supply (100 – 240V AC) and AUS connecting cable
						(7)	**Signal output (and serial RS232 interface or (optionally) communication module)**
x					1		analog output channel (Ch1+Ch2+Ch3) 4 – 20mA
x					2		analog output channel (Ch1+Ch2+Ch3) 0 – 20mA
x					3		analog output channel (Ch1+Ch2+Ch3) 0 – 1V
x					4		analog output channel (Ch1+Ch2+Ch3) 0 – 5V
x					5		analog output channel (Ch1+Ch2+Ch3) 0 – 10V
		Ch1	Ch2	Ch3		**(8)**	**Analog output signals for Ch1, Ch2 and Ch3**
x				A			no third analog output (choose A if not required)
x		B	B	B			RH (0 – 100% RH)
x		C	C	C			T (see (9) output range temp.)
x		D	D	D			Td (-20 to +100°C) (-4 to +212°F)
x		E	E	E			Tdf (-20 to +100°C) (-4 to +212°F)
x		F	F	F			a (0 – 600g/m³) (0 – 262gr/ft3)
x		G	G	G			Tw (0 to 100°C) (+32 to +212°F)
x		H	H	H			x (0 – 500g/kg d.a.) (0 – 3500gr/lb)
x		J	J	J			h (-40 to +1500kJ/kg) (-9.5 to +652.6Btu/lb)
x		K	K	K			ppm (0 – 5000) (0 – 5000)
x		L	L	L			pw (0 – 1000hPa) (0 – 14.5psi)
x		M	M	M			pws (0 – 1000hPa) (0 – 14.5psi)
x		N	N	N			dT (-10 to +50°C) (14 to +122°F)
x		X	X	X			Define special scaling Ch1: _____ Ch2: _____ Option Ch3: _____
						(9)	**Analog output range for temperature**
x					A		no temperature output (choose A if not required)
x					B		-40 to +60°C (-40 to +140°F)
x					C		-40 to +80°C (-40 to +176°F)
x					D		-40 to +120°C (-40 to +248°F)
x					E		-40 to +180°C (-40 to +356°F)
x					F		-20 to +60°C (-4 to +140°F)
x					G		-20 to +80°C (-4 to +176°F)
x					H		-20 to +120°C (-4 to +248°F)
x					J		-20 to +180°C (-4 to +356°F)
x					K		0 to 60°C (32 to 140°F)
x					L		0 to 100°C (32 to 212°F)
x					M		0 to 120°C (32 to 248°F)
x					N		0 to 180°C (32 to 356°F)
x					P		-60 to +60°C (-76 to +140°F)
x					X		Specifics: _____
						(10)	**Output unit**
x					1		metric
x					2		non-metric
						(11)	**Option for module slot 1** / **Option for module slot 2**
x				0	0		no module / no module
x				1	1		relay output / relay output
x				2	3		RS485 serial interface (electrically isolated) / third analog output (required if Ch3 (8) is selected)
						(12)	**Cable bushings**
x					A		cable gland M 20x1.5
x					B		conduit fitting NPT 1/2"
x					C		8-pole connector with 5m cable
x					D		8-pole mating connector equipped with screw terminals
						(13)	**Transducer mounting**
x					0		standard mounting
x					1		wall-mounting plate
x					2		pole installation kit
x					3		pole installation kit with rain shield
x					4		DIN rail kit
						(14)	**Humidity sensor type**
x					A		general application (standard) / HUMICAP® 180R
x					C		sensor with cleaning function / HUMICAP® 180RC
						(15)	**Sensor protection / filter**
x					A		PPS plastic grid with stainless steel mesh
x					B		PPS plastic grid
x					C		sintered stainless steel filter
x					D		stainless steel grid
						(16)	**Probe installation kit**
x					A		no installation kit
x					C		duct installation kit
x					D		cable gland AGRO
x					K		Swagelok NPT 1/2"
x					L		Swagelok ISO 3/8"
						(17)	**Operating instructions: language**
x					1		English
x					2		German
x					3		French
						(18)	**Calibration**
x					3A1		calibration to ISO 9001 standard (calibration report is available on request)

	(1)	(2)	(3)	(4)	(5)	(6)	(7)	(8)	(9)	(10)	(11)	(12)	(13)	(14)	(15)	(16)	(17)	(18)
Order code	_____ -	___ -	___ -	___ -	___ -	___ -	___ -	___ -	___ -	___ -	___ -	___ -	___ -	___ -	___ -	___ -	___ -	___
Order example	907023/337A -	S -	0 -	A -	1 -	0 -	1 -	BCA -	B -	1 -	00 -	A -	0 -	A -	A -	A -	2 -	3A1

JUMO GmbH & Co. KG
Delivery address: Mackenrodtstraße 14, 36039 Fulda, Germany
Postal address: 36035 Fulda, Germany
Phone: +49 661 6003-0
Fax: +49 661 6003-607
E-mail: mail@jumo.net
Internet: www.jumo.net

JUMO Instrument Co. Ltd.
JUMO House
Temple Bank, Riverway
Harlow - Essex CM20 2DY, UK
Phone: +44 1279 63 55 33
Fax: +44 1279 63 52 62
E-mail: sales@jumo.co.uk
Internet: www.jumo.co.uk

JUMO Process Control, Inc.
8 Technology Boulevard
Canastota, NY 13032, USA
Phone: 315-697-JUMO
1-800-554-JUMO
Fax: 315-697-5867
E-mail: info@jumo.us
Internet: www.jumo.us

Humidity and temperature transducers with a heated probe for high-humidity applications, Type 907023/337B

- **for temperatures ranging from -70 to +180°C**
- **for industrial and meteorological applications with a high level of humidity**
- **excellent performance data in condensing atmospheres, thanks to the heated probe**
- **small, vapor-tight stainless steel probe for remote measurement**
- **outstanding accuracy and stability**
- **graphical trend display and measurement history of the past year**
- **corrosion-resistant housing, IP65 rating**
- **retraceable to NIST**

Transducer for the most demanding process conditions, and for meteorological applications (Picture: optionally with an additional temperature sensor)

This humidity and temperature transducer is available in two versions:
- with a heated probe:
  for dew point measurements in almost condensing atmospheres
- with a heated probe and
  an additional temperature sensor:
  for measuring relative humidity in almost condensing atmospheres

Correct humidity measurements with condensation
This unique, heated probe enables fast and reliable dew point measurements in environments in which humidity is near the saturation point. The heated sensor quickly returns to producing correct measurements, even with short-term condensation.

Since the probe temperature lies above the ambient temperature, the humidity level stays within the ambient humidity.
With accurate temperature measurement, the dew point of the environment can, however, be precisely calculated.

An additional temperature sensor is necessary for determining relative humidity. The ambient temperature measured in this way serves to calculate relative humidity and derived humidity variables.

Numerous mounting options
Vapor-tight mounting in a duct or pipe can be implemented using Swagelok screw fittings. A duct installation kit and, in addition, a mounting kit for meteorological outdoor measurements are available as an option.

Duct installation kit

Graphical trend and development display
The instrument series can optionally be supplied with a large numerical/graphical display on which the process development can easily be monitored and traced back for up to a year.
The measurement data can be transferred to a PC for further processing, and for copying to other programs.

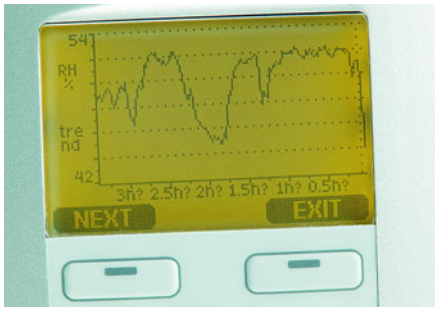

With the help of the display, the user is able to trace measurement trends back for up to a year.

JUMO GmbH & Co. KG
Delivery address: Mackenrodtstraße 14, 36039 Fulda, Germany
Postal address: 36035 Fulda, Germany
Phone: +49 661 6003-0
Fax: +49 661 6003-607
E-mail: mail@jumo.net
Internet: www.jumo.net

JUMO Instrument Co. Ltd.
JUMO House
Temple Bank, Riverway
Harlow - Essex CM20 2DY, UK
Phone: +44 1279 63 55 33
Fax: +44 1279 63 52 62
E-mail: sales@jumo.co.uk
Internet: www.jumo.co.uk

JUMO Process Control, Inc.
8 Technology Boulevard
Canastota, NY 13032, USA
Phone: 315-697-JUMO
1-800-554-JUMO
Fax: 315-697-5867
E-mail: info@jumo.us
Internet: www.jumo.us

Order details: Humidity and temperature transducers with a heated probe for high-humidity applications, type 907023/337B

						(1)	**Basic type**	
					907023/337B		Humidity and temperature transducer with a heated probe for high-humidity applications	
						(2)	**Dew point probe / cable length**	
x					S		2m cable	
x					T		5m cable	
x					U		10m cable	
						(3)	**Additional temperature probe**	
x					0		no additional temperature probe	
x					1		2m cable	
x					2		5m cable	
x					3		10m cable	
						(4)	**Parameters**	
x					C		Td+Tdf+x+pw	(dew point probe only)
x					D		RH+T+Td+Tdf+a+x+Tw+ppm+pw+pws+h+dT	(with additional T probe)
						(5)	**Display**	
x					0		no display	
x					1		graphics LCD with background lighting	
						(6)	**Supply**	
x					0		10 – 35V DC, 24V AC	
x					1		electrical isolation for outputs 10 – 35V DC, 24V AC	
x					2		universal AC supply (100 – 240V AC)	
x					3		universal AC supply (100 – 240V AC) and US connecting cable	
x					4		universal AC supply (100 – 240V AC) and EUR connecting cable	
x					5		universal AC supply (100 – 240V AC) and UK connecting cable	
x					6		universal AC supply (100 – 240V AC) and AUS connecting cable	
						(7)	**Signal output (and serial RS232 interface or (optionally) communication module)**	
					1		analog output channel (Ch1+Ch2+Ch3) 4 – 20mA	
x					2		analog output channel (Ch1+Ch2+Ch3) 0 – 20mA	
x					3		analog output channel (Ch1+Ch2+Ch3) 0 – 1V	
x					4		analog output channel (Ch1+Ch2+Ch3) 0 – 5V	
x					5		analog output channel (Ch1+Ch2+Ch3) 0 – 10V	
		Ch1	Ch2	Ch3		**(8)**	**Analog output signals for Ch1, Ch2 and Ch3**	
x				A			no third analog output (choose A if not required)	
x		B	B	B			RH	(0 – 100% RH)
x		C	C	C			T	(see (9) output range temp.)
x		D	D	D			Td (-20 to +100°C)	(-4 to +212°F)
x		E	E	E			Tdf (-20 to +100°C)	(-4 to +212°F)
x		F	F	F			a (0 – 600g/m³)	(0 – 262gr/ft3)
x		G	G	G			Tw (0 to 100°C)	(+32 to +212°F)
x		H	H	H			x (0 – 500g/kg d.a.)	(0 – 3500gr/lb)
x		J	J	J			h (-40 to +1500kJ/kg)	(-9.5 to +652.6Btu/lb)
x		K	K	K			ppm (0 – 5000)	(0 – 5000)
x		L	L	L			pw (0 – 1000hPa)	(0 – 14.5psi)
x		M	M	M			pws (0 – 1000hPa)	(0 – 14.5psi)
x		N	N	N			dT (-10 to +50°C)	(14 to +122°F)
x		X	X	X			Define special scaling	Ch1: _____ Ch2: _____ Option Ch3: _____
						(9)	**Analog output range for temperature**	
x				A			no temperature output (choose A if not required)	
x				B			-40 to +60°C	(-40 to +140°F)
x				C			-40 to +80°C	(-40 to +176°F)
x				D			-40 to +120°C	(-40 to +248°F)
x				E			-40 to +180°C	(-40 to +356°F)
x				F			-20 to +60°C	(-4 to +140°F)
x				G			-20 to +80°C	(-4 to +176°F)
x				H			-20 to +120°C	(-4 to +248°F)
x				J			-20 to +180°C	(-4 to +356°F)
x				K			0 to 60°C	(32 to 140°F)
x				L			0 to 100°C	(32 to 212°F)
x				M			0 to 120°C	(32 to 248°F)
x				N			0 to 180°C	(32 to 356°F)
x				P			-60 to +60°C	(-76 to +140°F)
x				X			Specifics: _____	
						(10)	**Output unit**	
x				1			metric	
x				2			non-metric	
						(11)	**Option for module slot 1**	**Option for module slot 2**
x			0	0			no module	no module
x			1	1			relay output	relay output
x			2	3			RS485 serial interface (electrically isolated)	third analog output (required if Ch3 (8) is selected)
						(12)	**Cable bushings**	
x				A			cable gland M 20x1.5	
x				B			conduit fitting NPT 1/2"	
x				C			8-pole connector with 5m cable	
x				D			8-pole mating connector equipped with screw terminals	
						(13)	**Transducer mounting**	
x				0			standard mounting	
x				1			wall-mounting plate	
x				2			pole installation kit	
x				3			pole installation kit with rain shield	
x				4			DIN rail kit	
						(14)	**Humidity sensor type**	
x				D			combined sensor	HUMICAP® 180RC
x				E			combined sensor with cleaning function	HUMICAP® 180RC
						(15)	**Sensor protection / filter**	
x				A			PPS plastic grid with stainless steel mesh	
x				C			sintered stainless steel filter	
x				D			stainless steel grid	
						(16)	**Probe installation kit**	
x				A			no installation kit	
x				C			duct installation kit	
x				K			Swagelok NPT 1/2"	
x				L			Swagelok ISO 3/8"	
x				P			duct installation kit (RH +T probes)	
x				Q			Swagelok NPT 1/2" and Swagelok NPT 1/8" (RH +T)	
x				R			Swagelok ISO 3/8" and Swagelok ISO 1/8" (RH+T)	
						(17)	**Operating instructions: language**	
x				1			English	
x				2			German	
x				3			French	
						(18)	**Calibration**	
x				3A1			calibration to ISO 9001 standard (calibration report is available on request)	

Order example, see page 13/18

JUMO GmbH & Co. KG
Delivery address: Mackenrodtstraße 14, 36039 Fulda, Germany
Postal address: 36035 Fulda, Germany
Phone: +49 661 6003-0
Fax: +49 661 6003-607
E-mail: mail@jumo.net
Internet: www.jumo.net

JUMO Instrument Co. Ltd.
JUMO House
Temple Bank, Riverway
Harlow - Essex CM20 2DY, UK
Phone: +44 1279 63 55 33
Fax: +44 1279 63 52 62
E-mail: sales@jumo.co.uk
Internet: www.jumo.co.uk

JUMO Process Control, Inc.
8 Technology Boulevard
Canastota, NY 13032, USA
Phone: 315-697-JUMO
1-800-554-JUMO
Fax: 315-697-5867
E-mail: info@jumo.us
Internet: www.jumo.us

Humidity and temperature transducers for pressure lines and chambers, Type 907023/338

- **for temperatures ranging from -70 to +180°C**
- **installation using a ball valve, for installation and removal under pressure**
- **variable probe installation depth through a sliding gland**
- **for measurements in the pressure range from 0 – 40bar**
- **outstanding accuracy and stability**
- **graphical trend display and measurement history of the past year**
- **corrosion-resistant housing, IP65 rating**
- **two probe shaft lengths are available**
- **retraceable to NIST**

Transducer for mounting in pressure lines and chambers, from which the probe can be removed without interrupting the operation

This humidity and temperature transducer is designed for processes subjected to pressures.

Installation and removal under pressure
The probe can be directly inserted into the process without interrupting the operation, and without having to vent or reduce the process pressure beforehand.

The probe head is inserted by means of a ball valve which is mounted in the pressure line or on the chamber wall.
The sliding cap nut is tightened by hand, so that the probe is initially in the minimum installation position. The ball valve is subsequently opened, which exposes the probe to the process pressure. Using a press tool, the probe is then pressed to the required installation depth and fixed with the cap nut.
The probe can be installed during operation under process pressures up to 10bar.

For correct measurement results, the prevailing process pressures can be entered in the transducer memory via a serial interface or the operator panel.

Graphical trend and development display
The transducers can optionally be supplied with a large numerical/graphical display on which the process development can be monitored easily and traced back for up to a year.
Maximum and minimum values of the past year can be graphically displayed in a simple manner.

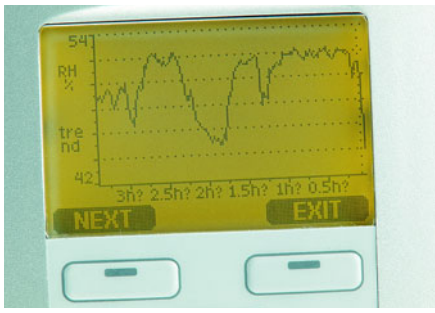

The display can be used to trace measurement trends back for up to a year.

Outputs and supply options for all needs
The output options include up to three analog outputs, RS232 and RS485 interfaces as well as alarm relays.

The possible supply voltage ranges from 10 to 35V DC. A wide-range power supply module ensures that the transducers can be connected to all supply voltages used around the globe.

JUMO GmbH & Co. KG
Delivery address: Mackenrodtstraße 14, 36039 Fulda, Germany
Postal address: 36035 Fulda, Germany
Phone: +49 661 6003-0
Fax: +49 661 6003-607
E-mail: mail@jumo.net
Internet: www.jumo.net

JUMO Instrument Co. Ltd.
JUMO House
Temple Bank, Riverway
Harlow - Essex CM20 2DY, UK
Phone: +44 1279 63 55 33
Fax: +44 1279 63 52 62
E-mail: sales@jumo.co.uk
Internet: www.jumo.co.uk

JUMO Process Control, Inc.
8 Technology Boulevard
Canastota, NY 13032, USA
Phone: 315-697-JUMO
1-800-554-JUMO
Fax: 315-697-5867
E-mail: info@jumo.us
Internet: www.jumo.us

Order details: Humidity and temperature transducers for pressure lines and chambers, type 907023/338

					(1)	**Basic type**	
				907023/338		Humidity and temperature transducer for pressure lines and chambers	
					(2)	**Sensor cable / cable length**	
x				V		2m cable for 232mm probe	
x				W		5m cable for 232mm probe	
x				X		10m cable for 232mm probe	
x				1		2m cable for 454mm probe	
x				2		5m cable for 454mm probe	
x				3		10m cable for 454mm probe	
					(3)	**Additional temperature probe**	
x				0		not for type 907023/338	
					(4)	**Parameters**	
x				A		RH + T	
x				B		RH+T+Td+Tdf+a+x+Tw+ppm+pw+pws+h+dT	
					(5)	**Display**	
x				0		no display	
x				1		graphics LCD with background lighting	
					(6)	**Supply**	
x				0		10 – 35V DC, 24V AC	
x				1		electrical isolation for outputs 10 – 35V DC, 24V AC	
x				2		universal AC supply (100 – 240V AC)	
x				3		universal AC supply (100 – 240V AC) and US connecting cable	
x				4		universal AC supply (100 – 240V AC) and EUR connecting cable	
x				5		universal AC supply (100 – 240V AC) and UK connecting cable	
x				6		universal AC supply (100 – 240V AC) and AUS connecting cable	
					(7)	**Signal output (and serial RS232 interface or (optionally) communication module)**	
x				1		analog output channel (Ch1+Ch2+Ch3) 4 – 20mA	
x				2		analog output channel (Ch1+Ch2+Ch3) 0 – 20mA	
x				3		analog output channel (Ch1+Ch2+Ch3) 0 – 1V	
x				4		analog output channel (Ch1+Ch2+Ch3) 0 – 5V	
x				5		analog output channel (Ch1+Ch2+Ch3) 0 – 10V	
	Ch1	Ch2		Ch3	**(8)**	**Analog output signals for Ch1, Ch2 and Ch3**	
x				A		no third analog output (choose A if not required)	
x	B	B		B		RH	(0 — 100% RH)
x	C	C		C		T	(see (9) output range temp.)
x	D	D		D		Td (-20 to +100°C)	(-4 to +212°F)
x	E	E		E		Tdf (-20 to +100°C)	(-4 to +212°F)
x	F	F		F		a (0 – 600g/m³)	(0 – 262gr/ft3)
x	G	G		G		Tw (0 to 100°C)	(+32 to +212°F)
x	H	H		H		x (0 – 500g/kg d.a.)	(0 – 3500gr/lb)
x	J	J		J		h (-40 to +1500kJ/kg)	(-9.5 to +652.6Btu/lb)
x	K	K		K		ppm (0 – 5000)	(0 – 5000)
x	L	L		L		pw (0 – 1000hPa)	(0 – 14.5psi)
x	M	M		M		pws (0 – 1000hPa)	(0 – 14.5psi)
x	N	N		N		dT (-10 to +50°C)	(14 to +122°F)
x	X	X		X		Define special scaling	Ch1: _____ Ch2: _____ Option Ch3: _____
					(9)	**Analog output range for temperature**	
x				A		no temperature output (choose A if not required)	
x				B		-40 to +60°C	(-40 to +140°F)
x				C		-40 to +80°C	(-40 to +176°F)
x				D		-40 to +120°C	(-40 to +248°F)
x				E		-40 to +180°C	(-40 to +356°F)
x				F		-20 to +60°C	(-4 to +140°F)
x				G		-20 to +80°C	(-4 to +176°F)
x				H		-20 to +120°C	(-4 to +248°F)
x				J		-20 to +180°C	(-4 to +356°F)
x				K		0 to 60°C	(32 to 140°F)
x				L		0 to 100°C	(32 to 212°F)
x				M		0 to 120°C	(32 to 248°F)
x				N		0 to 180°C	(32 to 356°F)
x				P		-60 to +60°C	(-76 to +140°F)
x				X		Specifics: _____	
					(10)	**Output unit**	
x				1		metric	
x				2		non-metric	
					(11)	**Option for module slot 1**	**Option for module slot 2**
x			0	0		no module	no module
x			1	1		relay output	relay output
x			2	3		RS485 serial interface (electrically isolated)	third analog output (required if Ch3 (8) is selected)
					(12)	**Cable bushings**	
x				A		cable gland M 20x1.5	
x				B		conduit fitting NPT 1/2"	
x				C		8-pole connector with 5m cable	
x				D		8-pole mating connector equipped with screw terminals	
					(13)	**Transducer mounting**	
x				0		standard mounting	
x				1		wall-mounting plate	
x				2		pole installation kit	
x				3		pole installation kit with rain shield	
x				4		DIN rail kit	
					(14)	**Humidity sensor type**	
x				A		general application (standard)	HUMICAP® 180R
x				C		combined sensor with cleaning function	HUMICAP® 180RC
					(15)	**Sensor protection / filter**	
x				A		PPS plastic grid with stainless steel mesh	
x				B		PPS plastic grid	
x				C		sintered stainless steel filter	
x				D		stainless steel grid	
					(16)	**Probe installation kit**	
x				M		ball valve installation kit (ISO 1/2")	
x				N		pressure connection NPT 1/2"	
x				V		pressure connection ISO 1/2"	
					(17)	**Operating instructions: language**	
x				1		English	
x				2		German	
x				3		French	
					(18)	**Calibration**	
x				3A1		calibration to ISO 9001 standard (calibration report is available on request)	

	(1)	(2)	(3)	(4)	(5)	(6)	(7)	(8)	(9)	(10)	(11)	(12)	(13)	(14)	(15)	(16)	(17)	(18)
Order code	_____	- _	- _	- _	- _	- _	- _	- ___	- _	- _	- __	- _	- _	- _	- _	- _	- _	- ___
Order example	907023/338	- V	- 0	- A	- 1	- 0	- 1	- BCA	- B	- 1	- 00	- A	- 0	- A	- A	- V	- 2	- 3A1

JUMO GmbH & Co. KG
Delivery address: Mackenrodtstraße 14,
36039 Fulda, Germany
Postal address: 36035 Fulda, Germany
Phone: +49 661 6003-0
Fax: +49 661 6003-607
E-mail: mail@jumo.net
Internet: www.jumo.net

JUMO Instrument Co. Ltd.
JUMO House
Temple Bank, Riverway
Harlow - Essex CM20 2DY, UK
Phone: +44 1279 63 55 33
Fax: +44 1279 63 52 62
E-mail: sales@jumo.co.uk
Internet: www.jumo.co.uk

JUMO Process Control, Inc.
8 Technology Boulevard
Canastota, NY 13032, USA
Phone: 315-697-JUMO
1-800-554-JUMO
Fax: 315-697-5867
E-mail: info@jumo.us
Internet: www.jumo.us

Order details: Accessories for humidity and temperature transducers for industrial applications

							(1)	**Basic type**
							907023/80	Software package
							907023/81	Installation kits
							907023/82	Screw fittings
							907023/90	Filter/sensor protection (12mm dia.)
							907023/91	Replacement humidity sensor
							907023/92	Replacement temperature sensor
							907023/93	Humidity sensor checks
							(2)	**Software package**
x							893	PC software and cable
							(2)	**Installation kits**
	x						247	wall mounting kit (plastic mounting plate)
	x						894	DIN rail mounting kit (including plastic mounting plate)
	x						895	pole installation kit (for pipes from 30 to 100mm)
	x						896	rain protection installation kit
	x						897	duct installation kit for type 907023/333
	x						898	duct installation kit (RH probe) for type 907023/337
	x						899	duct installation kit (T probe) for type 907023/337
	x						900	mounting flange for type 907023/335
	x						901	meteorological installation kit for type 907023/337
	x						902	ball valve installation kit for type 907023/338 (0 — 40bar)
							(2)	**Screw fittings**
		x					903	cable glands for types 907023/333 and 907023/337
		x					904	pressure-tight Swagelok screw fitting (RH probe) ISO 3/8" for type 907023/337
		x					905	pressure-tight Swagelok screw fitting (T probe) ISO 1/8" for type 907023/337
		x					906	pressure-tight Swagelok screw fitting (RH probe) NPT 1/2" for type 907023/337
		x					907	pressure-tight Swagelok screw fitting (T probe) NPT 1/8" for type 907023/337
							(2)	**Filter/sensor protection (12mm dia.)**
			x				890	sintered stainless steel filter
			x				891	PPS plastic grid filter with stainless steel mesh
			x				892	PPS plastic grid filter
							(2)	**Replacement humidity sensor**
				x			814	HUMICAP® 180R
							(2)	**Replacement temperature sensor**
					x		856	Pt 100 1/3 DIN Class B to DIN EN 60 751
							(2)	**Humidity sensor checks**
						x	820	33% RH magnesium chloride
						x	821	55% RH magnesium nitrate
						x	822	76% RH sodium chloride

	(1)		(2)
Order code	☐	-	☐
Order example	907023/80	-	893

Stock versions:

Accessories for humidity and temperature transducers for industrial applications

(1)		(2)	Sales No.
☐	-	☐	
907023/90	-	890	90/00465143
907023/90	-	891	90/00465144
907023/90	-	892	90/00465145
907023/92	-	856	90/00412342
907023/93	-	820	90/00332758
907023/93	-	821	90/00332759
907023/93	-	822	90/00332760

JUMO GmbH & Co. KG
Delivery address: Mackenrodtstraße 14
36039 Fulda, Germany
Postal address: 36035 Fulda, Germany
Phone: +49 661 6003-0
Fax: +49 661 6003-607
Email: mail@jumo.net
Internet: www.jumo.net

JUMO Instrument Co. Ltd.
JUMO House
Temple Bank, Riverway
Harlow, Essex CM 20 2DY, UK
Phone: +44 1279 63 55 33
Fax: +44 1279 62 50 29
Email: sales@jumo.co.uk
Internet: www.jumo.co.uk

JUMO Process Control, Inc.
6733 Myers Road
East Syracuse, NY 13057, USA
Phone: +1 315 437 5866
Fax: +1 315 437 5860
Email: info.us@jumo.net
Internet: www.jumousa.com

Intrinsically Safe Industrial Measuring Probes for Humidity, Temperature, and Derived Variables

- **For measuring relative air humidity and temperature**
- **The calculations of dew point temperature, absolute humidity, mixing ratio, and wet-bulb temperature are possible as options**
- **User-friendly, modular measuring probe concept**
- **Intelligent exchange probes that save all calibration coefficients**
- **Temperature resistant from -70 to +180 °C (depending on the type of probe)**
- **Pressure resistant up to 100 bar (depending on the probe type)**
- **Safe operation of the complete device in potentially explosive areas of category 1G / zone 0 and 1D / zone 20 with protection cover (EU)**
- **Traceable to NIST (including certificate)**

The intrinsically safe industrial measuring probes are the first choice when it comes to humidity, temperature, and derived variables.

The new intrinsically safe industrial measuring probes were developed to meet the need of providing precise and risk-free humidity monitoring in potentially explosive areas. This series sets completely new standards for easy mounting and user-friendliness.

The modular add-on concept consists of four parts that can be separated from each other (holder for wall mounting, housing bottom, electronic unit, and probe), thereby substantially simplifying mounting, operation, and maintenance.
Versatile uses for almost all applications are possible in connection with five exchangeable probes.

Recalibration of the industrial measuring probe is no longer necessary when replacing the probes, as all calibration coefficients are already stored in the probe's memory itself and then transmitted when connected to the central processing unit.
Otherwise, the probe design types do not differ from the proven versions of the industrial series that offers 2 m, 5 m, or 10 m sensor lines. The special sensor head variants that permit use in an underpressure and overpressure range from 0 to 100 bar and at high process temperatures of up to 180 °C are also available.
The industrial measuring probes are extremely robust and based on the latest sensor technology.
They operate safely and reliably in areas with the constant explosion hazard of category 1 (zone 0).

Due to the microprocessor controlled electronics and a large number of options the industrial measuring probes can be applied with a high degree of flexibility.
When ordering, the user can directly specify the configuration of the industrial measuring probe. A subsequent on-site change in the configuration is also possible.

The optional software extension allows the integrated microprocessor to calculate absolute humidity variables such as dew point Td (°C), absolute humidity a (g/m³), mixing ratio x (g/kg), and wet-bulb temperature Tw (°C).

The intrinsically safe measuring probes are equipped with an analog output (4 to 20 mA) as standard. In addition, a second analog output and an integrated LCD display / operating pad can be added as an option.
The connection to the voltage supply (DC 12 to 28 V) must be carried out via protection barriers or intrinsically safe power supply units that are available externally (see "Technical data") when used in potentially explosive areas.

All industrial measuring probes are equipped with sensors that have the latest thin film technology. The continuous further development and improvement of these sensors is backed by over 20 years worth of experience. The sensors particularly distinguish themselves through the highest precision, reliability, and stability.

JUMO GmbH & Co. KG
Delivery address: Mackenrodtstraße 14
36039 Fulda, Germany
Postal address: 36035 Fulda, Germany
Phone: +49 661 6003-0
Fax: +49 661 6003-607
Email: mail@jumo.net
Internet: www.jumo.net

JUMO Instrument Co. Ltd.
JUMO House
Temple Bank, Riverway
Harlow, Essex CM 20 2DY, UK
Phone: +44 1279 63 55 33
Fax: +44 1279 62 50 29
Email: sales@jumo.co.uk
Internet: www.jumo.co.uk

JUMO Process Control, Inc.
6733 Myers Road
East Syracuse, NY 13057, USA
Phone: +1 315 437 5866
Fax: +1 315 437 5860
Email: info.us@jumo.net
Internet: www.jumousa.com

Technical data

Design types	
Basic type 907025/61	Intrinsically safe humidity and temperature measuring probe for wall mounting, operating temperature -40 to +60 °C
Basic type 907025/63	Intrinsically safe humidity and temperature measuring probe with small sensor head on a sensor line, operating temperature -40 to +120 °C
Basic type 907025/64	Intrinsically safe humidity and temperature measuring probe with a pressure-resistant stainless steel sensor head on a sensor line for process pressures from 0 to 10 MPa (0 to 100 bar) pressure connection M22 x 1.5, operating temperature -70 to +180 °C
Basic type 907025/65	Intrinsically safe humidity and temperature measuring probe with stainless steel sensor head on a sensor line, operating temperature -70 to +180 °C
Basic type 907025/68 and 907025/68L (long version, shaft length 400 mm)	Intrinsically safe humidity and temperature measuring probe with a pressure-resistant stainless steel sensor head on a sensor line for process pressures from 0 to 4 MPa (0 to 40 bar), pressure connection ISO 1/2", sensor head with adjustable threaded fitting; operating temperature -70 to +180 °C
	Important information: When used in potentially explosive areas, the connection to the voltage supply (DC 12 to 28 V) must be carried out via intrinsically safe power supply devices or protection barriers that are available externally. When used in category 1 (zone 0), an intrinsically safe power supply unit (e.g. type JUMO 707530/38) must be used per channel. When used in categories 2 and 3 (zone 1 and 2), safety barriers are sufficient, however these are not included in the JUMO scope of delivery. For further information please consult the current operating manual that comes with the measuring probe!
Variables	
Relative humidity	
Measuring range	0 to 100 % RH
Accuracy (including non-linearity, hysteresis and repeatability)	
With Vaisala HUMICAP® 180R	For general applications
At 15 to 25 °C (59 to 77 °F)	±1.0 % RH (0 to 90 % RH)
	±1.7 % RH (90 to 100 % RH)
At -20 to +40 °C (-4 to +104 °F)	±(1.0 + 0.8 % from the measured value) % RH
At -40 to +180 °C (-40 to +356 °F)	±(1.5 + 1.5 % from the measured value) % RH
With Vaisala HUMICAP® 180_L2	For applications with high chemical concentrations
At -10 to +40 °C (14 to 104 °F)	±(1.0 + 1 % from the measured value) % RH
At -40 to +180 °C (-40 to +356 °F)	±(1.5 + 2 % from the measured value) % RH
Uncertainty of factory calibration (20 °C)	±0.6 % RH (0 to 40 % RH)
	±1.0 % RH (40 to 97 % RH)
	Defined as ±2 standard limits of deviation Subject to changes, see calibration certificate for exact specifications
Response time (90 %) at 20 °C in still air	
With grid filter	17 s
With grid and stainless steel mesh filter	50 s
With sinter filter	60 s
Temperature measuring range	-70 to +180 °C (depending on the probe selected)
Accuracy of the electronics system at 20 °C, typical	±0.1 °C
Temperature dependency of electronics system	0.005 °C/°C
Temperature sensors	Pt1000 class AA according to DIN EN 60751

JUMO GmbH & Co. KG
Delivery address: Mackenrodtstraße 14
36039 Fulda, Germany
Postal address: 36035 Fulda, Germany
Phone: +49 661 6003-0
Fax: +49 661 6003-607
Email: mail@jumo.net
Internet: www.jumo.net

JUMO Instrument Co. Ltd.
JUMO House
Temple Bank, Riverway
Harlow, Essex CM 20 2DY, UK
Phone: +44 1279 63 55 33
Fax: +44 1279 62 50 29
Email: sales@jumo.co.uk
Internet: www.jumo.co.uk

JUMO Process Control, Inc.
6733 Myers Road
East Syracuse, NY 13057, USA
Phone: +1 315 437 5866
Fax: +1 315 437 5860
Email: info.us@jumo.net
Internet: www.jumousa.com

Derived variables (option)	With probe	With probes
Typical measuring ranges	907025/S61	907025/S63, 907025/S64, 907025/S65 and 907025/S68
Dew point T_d	-40 to +60 °C	-40 to +100 °C
Mixing ratio x	0 to 160 g/kg dry air	0 to 500 g/kg dry air
Absolute humidity a	0 to 160 g/m^3	0 to 600 g/m^3
Wet-bulb temperature T_w	0 to 60 °C	0 to 100 °C
	The accuracy of the derived variables depends on the accuracy of the humidity and temperature measurement, and the respective working point.	
Outputs		
2 analog outputs (one standard, one optional)	4 to 20 mA (two-wire technology)	
Accuracy of analog outputs at 20 °C	0.05 % of end value	
Temperature dependency	0.005 %/°C of end value	

JUMO GmbH & Co. KG
Delivery address: Mackenrodtstraße 14
36039 Fulda, Germany
Postal address: 36035 Fulda, Germany
Phone: +49 661 6003-0
Fax: +49 661 6003-607
Email: mail@jumo.net
Internet: www.jumo.net

JUMO Instrument Co. Ltd.
JUMO House
Temple Bank, Riverway
Harlow, Essex CM 20 2DY, UK
Phone: +44 1279 63 55 33
Fax: +44 1279 62 50 29
Email: sales@jumo.co.uk
Internet: www.jumo.co.uk

JUMO Process Control, Inc.
6733 Myers Road
East Syracuse, NY 13057, USA
Phone: +1 315 437 5866
Fax: +1 315 437 5860
Email: info.us@jumo.net
Internet: www.jumousa.com

Ex-classifications (analog outputs)

Europe/VTT

EU (94/9/EC)	II 1 G Ex ia IIC T4 Ga VTT 09 ATEX 028X edition no.: 3
Safety factors	U_i = DC 28 V, I_i = 100 mA, P_i = 700 mW, C_i = 1 nF, L_i = negligibly small
Environmental conditions T_{amb} P_{amb}	 -40 to +60 °C (-40 to +140 °F) 0.8 to 1.1 bar
Dust Ex-protection (with protection cover)	II 1 D (IP65 T = 70 °C) VTT 04 ATEX 023X

USA (FM)

	Classes I, II, III, Section 1, groups A, B, C, D, E, F and G and Section 2, groups A, B, C, D, F and G FM project ID: 3010615
Safety factors	V_{max} = DC 28 V, I_{max} = 100 mA, C_i = 1 nF, L_i = 0, P_i = 700 mW, T_{amb} = 60 °C (140 °F), T5

Japan (TIIS)

	Ex ia IIC T4 Code no.: TC20238
Safety factors	U_i = DC 28 V, I_i = 100 mA, C_i = 1 nF, P_i = 700 mW, L_i = 0, T_{amb} = 60 °C (140 °F)

Canada (CSA)

Class I Class II Class III	Sections 1 and 2, groups A, B, C and D Sections 1 and 2, groups G and coal dust CSA document no.: 213862 CSA certificate no.: 1300863
Safety factors	T_{amb} = 60 °C (140 °F), T4 Intrinsically safe when installing according to installation diagram DRW213478

China (PCEC)

	Ex ia IIC T4 Ga Certificate no.: CE14.2164 Standards: GB3836.1-2010 and GB3836.4-2010

IECEx (VTT)

	Ex ia IIC T4 Ga VTT 09.0002X edition no.: 3
Safety factors	U_i = DC 28 V, I_i = 100 mA, P_i = 700 mW, C_i = 1 nF, L_i = negligibly small
Environmental conditions T_{amb} P_{amb}	 -40 to +60 °C (-40 to +140 °F) 0.8 to 1.1 bar

EAC (Russia, Kazakhstan, Belarus) (T RCU)

	Ex ia IIC T4 Ga X Certificate no.: RU C-FI.MIII06.B.00068
Environmental conditions T_{amb} P_{amb}	 -40 to +60 °C (-40 to +140 °F) 0.8 to 1.1 bar

JUMO GmbH & Co. KG
Delivery address: Mackenrodtstraße 14
36039 Fulda, Germany
Postal address: 36035 Fulda, Germany
Phone: +49 661 6003-0
Fax: +49 661 6003-607
Email: mail@jumo.net
Internet: www.jumo.net

JUMO Instrument Co. Ltd.
JUMO House
Temple Bank, Riverway
Harlow, Essex CM 20 2DY, UK
Phone: +44 1279 63 55 33
Fax: +44 1279 62 50 29
Email: sales@jumo.co.uk
Internet: www.jumo.co.uk

JUMO Process Control, Inc.
6733 Myers Road
East Syracuse, NY 13057, USA
Phone: +1 315 437 5866
Fax: +1 315 437 5860
Email: info.us@jumo.net
Internet: www.jumousa.com

General data

Voltage supply When using the service interface Requirement	DC 12 to 28 V DC 15 to 28 V The device must be equipped with an electrical circuit that meets the requirements of EN 61010-1 with regard to "Limited-energy circuits".
Operating temperature range Electronics system (with LCD display)	 -40 to +60 °C (-20 to +60 °C)
Storage temperature range	-40 to +70 °C
Connections	Screw terminals 0.33 to 2.0 mm^2
Cable gland	Pg11 for sensor line with Ø 5 to 12 mm
Line bushing	Pg11/NPT 1/2"-14
Case material	G-AlSi10 Mg (DIN 1725)
Housing dimensions	164 × 115 × 62 mm (Length × Width × Height)
Case protection type	IP66 (NEMA 4x)
Weight of case	950 g
Display	Two-line LCD display
EMC	According to EN 61326-1:1997 and annex 1:1998 (EN 61000-4-5 only when using an external overvoltage arrester)

Probes

907025/S61 Temperature range	Probe for wall mounting -40 to +60 °C
907025/S63 Temperature range	Probe in small design type -40 to +120 °C
907025/S64 Temperature range Pressure range	Probe for high pressures -70 to +180 °C 0 to 10 MPa (0 to 100 bar)
907025/S65 Temperature range	Probe for high temperatures -70 to +180 °C
907025/S68 and 907025/S68L Temperature range Pressure range	Probe for pressure lines -70 to +180 °C 0 to 4 MPa (0 to 40 bar)
Probe line diameter (all basic types) Probe line length	5.5 mm 2 m (standard) 5 m or 10 m (optional)

Options

Second analog output	4 to 20 mA (two-wire technology)
Housing with display/control field	Two-line LCD display
Character size (1st line/2nd line)	12 mm/10 mm
Expansion for derived variables	Dew point temperature T_d, mixing ratio x, absolute humidity a, wet-bulb temperature T_w
Sensor protection	Sinter filter 38 µm made from acid-proof, rust-free stainless steel AISi 316L (material no. 1.4404), Stainless steel grid AISi 316L (material no. 1.4404), PPS grid with rust-free stainless steel mesh AISi 316 (material no. 1.4436), PPS grid

JUMO GmbH & Co. KG
Delivery address: Mackenrodtstraße 14
36039 Fulda, Germany
Postal address: 36035 Fulda, Germany
Phone: +49 661 6003-0
Fax: +49 661 6003-607
Email: mail@jumo.net
Internet: www.jumo.net

JUMO Instrument Co. Ltd.
JUMO House
Temple Bank, Riverway
Harlow, Essex CM 20 2DY, UK
Phone: +44 1279 63 55 33
Fax: +44 1279 62 50 29
Email: sales@jumo.co.uk
Internet: www.jumo.co.uk

JUMO Process Control, Inc.
6733 Myers Road
East Syracuse, NY 13057, USA
Phone: +1 315 437 5866
Fax: +1 315 437 5860
Email: info.us@jumo.net
Internet: www.jumousa.com

Dimensions

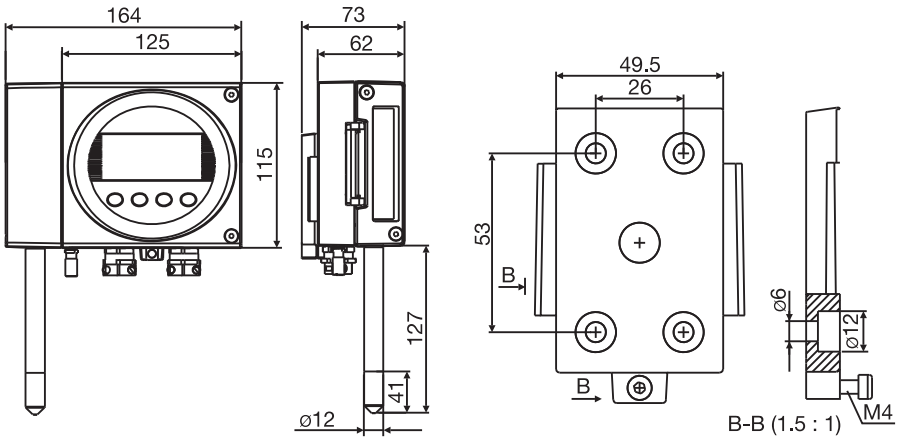

Central processing unit with probe 907025/Holder for wall mounting S61
Basic type 907025/61

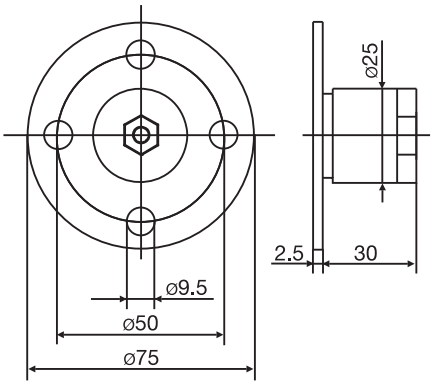

Installation kit and mounting flange

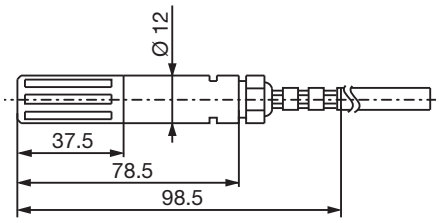

Probe 907025/S63

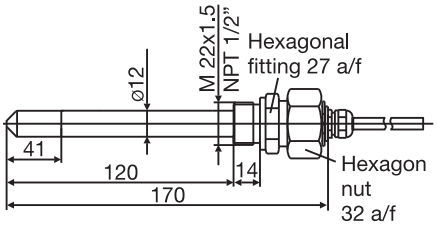

Probe 907025/S64

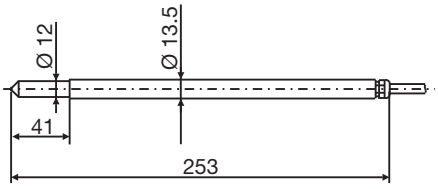

Probe 907025/S65

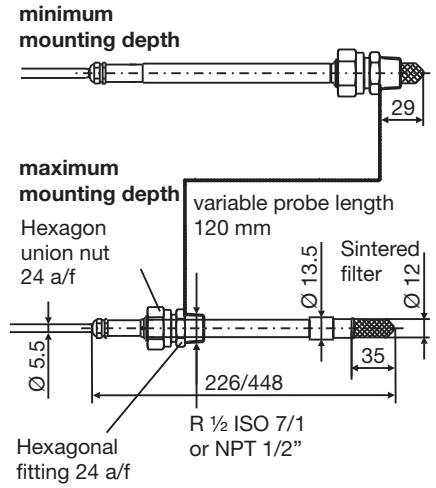

Probe 907025/S68 and 907025/S68L

All measurements in mm.

JUMO GmbH & Co. KG
Delivery address: Mackenrodtstraße 14
36039 Fulda, Germany
Postal address: 36035 Fulda, Germany
Phone: +49 661 6003-0
Fax: +49 661 6003-607
Email: mail@jumo.net
Internet: www.jumo.net

JUMO Instrument Co. Ltd.
JUMO House
Temple Bank, Riverway
Harlow, Essex CM 20 2DY, UK
Phone: +44 1279 63 55 33
Fax: +44 1279 62 50 29
Email: sales@jumo.co.uk
Internet: www.jumo.co.uk

JUMO Process Control, Inc.
6733 Myers Road
East Syracuse, NY 13057, USA
Phone: +1 315 437 5866
Fax: +1 315 437 5860
Email: info.us@jumo.net
Internet: www.jumousa.com

Order details

			(1)	**Basic type**
	907025/61			Intrinsically safe humidity and temperature measuring probe for wall mounting, operating temperature -40 to +60 °C
			(2)	**Output variables**
x	11			RH + T
x	15			RH + T + T_d + a + T_w + x
			(3)	**Analog output variables channel 1 (and channel 2 optionally)**
x	.	0		For standard use of only one channel please select 0 for channel 2!
x	1	1		RH 0 to 100 % RH
x	2	2		T (see temperature measuring ranges)
x	3	3		T_d[a] -40 to +60 °C
x	4	4		a[a] 0 to 160 g/m^3
x	5	5		T_w[a] 0 to 60 °C
x	6	6		x[a] 0 to 160 g/kg dry air
x	9	9		Special scaling (specify in plain text)
			(4)	**Temperature measuring ranges**
x	472			-40 to +60 °C
x	632			-20 to +60 °C
x	807			0 to 60 °C
x	999			Special measuring range (specify in plain text)
			(5)	**Probe shaft/filter**
x	2			127 mm probe shaft length (60 °C), PPS plastic grid filter with stainless steel mesh
			(6)	**Extra code**
x	000			none
x	427			Device line connection NPT 1/2" (for wire lines)
x	777			Unit not metric (°F)
x	789			Integrated LCD display/built-in control panel
x	801			PPS plastic grid filter with PTFE membrane
x	803			Stainless steel sinter filter
x	805			PPS plastic grid filter without stainless steel mesh
x	826			2 analog output channels (channel 1 and channel 2), 4 to 20 mA
x	828			Operating instructions in English

[a] The calculated variables T_d, a, T_w, and x are only available if option 15 is selected at the output variables.

	(1)		(2)		(3)		(4)		(5)		(6)	
Order code	[ ]	-	[ ]	-	[ ]	-	[ ]	-	[ ]	/	[ ]	, ...[a]
Order example	907025/61	-	11	-	12	-	472	-	2	/	000	

[a] List extra codes in sequence, separated by commas.

JUMO GmbH & Co. KG
Delivery address: Mackenrodtstraße 14
36039 Fulda, Germany
Postal address: 36035 Fulda, Germany
Phone: +49 661 6003-0
Fax: +49 661 6003-607
Email: mail@jumo.net
Internet: www.jumo.net

JUMO Instrument Co. Ltd.
JUMO House
Temple Bank, Riverway
Harlow, Essex CM 20 2DY, UK
Phone: +44 1279 63 55 33
Fax: +44 1279 62 50 29
Email: sales@jumo.co.uk
Internet: www.jumo.co.uk

JUMO Process Control, Inc.
6733 Myers Road
East Syracuse, NY 13057, USA
Phone: +1 315 437 5866
Fax: +1 315 437 5860
Email: info.us@jumo.net
Internet: www.jumousa.com

			(1)	**Basic type**
	907025/63			Intrinsically safe humidity and temperature measuring probe with small sensor head on a sensor line, operating temperature -40 to +120 °C
			(2)	**Output variables**
x	11			RH + T
x	15			RH + T + T_d + a + T_w + x
			(3)	**Analog output variables channel 1 (and channel 2 optionally)**
x	.	0		For standard use of only one channel please select 0 for channel 2!
x	1	1		RH 0 to 100 % RH
x	2	2		T (see temperature measuring ranges)
x	3	3		T_d[a] -40 to +100 °C
x	4	4		a[a] 0 to 500 g/m^3
x	5	5		T_w[a] 0 to 100 °C
x	6	6		x[a] 0 to 500 g/kg dry air
x	9	9		Special scaling (specify in plain text)
			(4)	**Temperature measuring ranges**
x	474			-40 to +80 °C
x	478			-40 to +120 °C
x	635			-20 to +80 °C
x	643			-20 to +120 °C
x	814			0 to 100 °C
x	999			Special measuring range (specify in plain text)
			(5)	**Sensor line lengths (probe shaft / filter)**
x	2			2 m shaft length 78.5 mm (98.5 mm with roll) (120 °C), PPS plastic grid filter with stainless steel mesh
x	5			5 m shaft length 78.5 mm (98.5 mm with roll) (120 °C), PPS plastic grid filter with stainless steel mesh
x	10			10 m shaft length 78.5 mm (98.5 mm with roll) (120 °C), PPS plastic grid filter with stainless steel mesh
			(6)	**Extra code**
x	000			none
x	427			Device line connection NPT 1/2" (for wire lines)
x	777			Unit not metric (°F)
x	783			Channel installation kit
x	789			Integrated LCD display/built-in control panel
x	826			2 analog output channels (channel 1 and channel 2), 4 to 20 mA
x	828			Operating instructions in English

[a] The calculated variables T_d, a, T_w, and x are only available if option 15 is selected at the output variables.

	(1)		(2)		(3)		(4)		(5)		(6)	
Order code		-		-		-		-		/		, ...[a]
Order example	907025/63	-	11	-	12	-	474	-	2	/	000	

[a] List extra codes in sequence, separated by commas.

JUMO GmbH & Co. KG
Delivery address: Mackenrodtstraße 14
36039 Fulda, Germany
Postal address: 36035 Fulda, Germany
Phone: +49 661 6003-0
Fax: +49 661 6003-607
Email: mail@jumo.net
Internet: www.jumo.net

JUMO Instrument Co. Ltd.
JUMO House
Temple Bank, Riverway
Harlow, Essex CM 20 2DY, UK
Phone: +44 1279 63 55 33
Fax: +44 1279 62 50 29
Email: sales@jumo.co.uk
Internet: www.jumo.co.uk

JUMO Process Control, Inc.
6733 Myers Road
East Syracuse, NY 13057, USA
Phone: +1 315 437 5866
Fax: +1 315 437 5860
Email: info.us@jumo.net
Internet: www.jumousa.com

			(1)	**Basic type**
	907025/64			Intrinsically safe humidity and temperature measuring probe with a pressure-resistant stainless steel sensor head on a sensor line for process pressures from 0 to 10 MPa (0 to 100 bar) pressure connection M22 x 1.5, operating temperature -70 to +180 °C
			(2)	**Output variables**
x	11			RH + T
x	15			RH + T + T_d + a + T_w + x
			(3)	**Analog output variables channel 1 (and channel 2 optionally)**
x	.	0		For standard use of only one channel please select 0 for channel 2!
x	1	1		RH 0 to 100 % RH
x	2	2		T (see temperature measuring ranges)
x	3	3		T_d[a] -40 to +100 °C
x	4	4		a[a] 0 to 500 g/m^3
x	5	5		T_w[a] 0 to 100 °C
x	6	6		x[a] 0 to 500 g/kg dry air
x	9	9		Special scaling (specify in plain text)
			(4)	**Temperature measuring ranges**
x	474			-40 to +80 °C
x	478			-40 to +120 °C
x	485			-40 to +180 °C
x	635			-20 to +80 °C
x	643			-20 to +120 °C
x	648			-20 to +180 °C
x	814			0 to 100 °C
x	830			0 to 180 °C
x	999			Special measuring range (specify in plain text)
			(5)	**Sensor line lengths (probe shaft / filter)**
x	2			2 m shaft length 170 mm (180 °C), stainless steel sinter filter
x	5			5 m shaft length 170 mm (180 °C), stainless steel sinter filter
x	10			10 m shaft length 170 mm (180 °C), stainless steel sinter filter
			(6)	**Extra code**
x	000			none
x	427			Device line connection NPT 1/2" (for wire lines)
x	777			Unit not metric (°F)
x	789			Integrated LCD display/built-in control panel
x	804			PPS plastic grid filter with stainless steel mesh
x	826			2 analog output channels (channel 1 and channel 2), 4 to 20 mA
x	828			Operating instructions in English
x	916			Pressure connection NPT 1/2"

[a] The calculated variables T_d, a, T_w, and x are only available if option 15 is selected at the output variables.

	(1)		(2)		(3)		(4)		(5)		(6)	
Order code		-		-		-		-		/		, ...[a]
Order example	907025/64	-	11	-	12	-	474	-	2	/	000	

[a] List extra codes in sequence, separated by commas.

JUMO GmbH & Co. KG
Delivery address: Mackenrodtstraße 14
36039 Fulda, Germany
Postal address: 36035 Fulda, Germany
Phone: +49 661 6003-0
Fax: +49 661 6003-607
Email: mail@jumo.net
Internet: www.jumo.net

JUMO Instrument Co. Ltd.
JUMO House
Temple Bank, Riverway
Harlow, Essex CM 20 2DY, UK
Phone: +44 1279 63 55 33
Fax: +44 1279 62 50 29
Email: sales@jumo.co.uk
Internet: www.jumo.co.uk

JUMO Process Control, Inc.
6733 Myers Road
East Syracuse, NY 13057, USA
Phone: +1 315 437 5866
Fax: +1 315 437 5860
Email: info.us@jumo.net
Internet: www.jumousa.com

			(1)	**Basic type**
	907025/65			Intrinsically safe humidity and temperature measuring probe with stainless steel sensor head on a sensor line, operating temperature -70 to +180 °C
			(2)	**Output variables**
x	11			RH + T
x	15			RH + T + T_d + a + T_w + x
			(3)	**Analog output variables channel 1 (and channel 2 optionally)**
x	.	0		For standard use of only one channel please select 0 for channel 2!
x	1	1		RH 0 to 100 % RH
x	2	2		T (see temperature measuring ranges)
x	3	3		T_d[a] -40 to +100 °C
x	4	4		a[a] 0 to 500 g/m^3
x	5	5		T_w[a] 0 to 100 °C
x	6	6		x[a] 0 to 500 g/kg dry air
x	9	9		Special scaling (specify in plain text)
			(4)	**Temperature measuring ranges**
x	474			-40 to +80 °C
x	478			-40 to +120 °C
x	485			-40 to +180 °C
x	635			-20 to +80 °C
x	643			-20 to +120 °C
x	648			-20 to +180 °C
x	814			0 to 100 °C
x	830			0 to 180 °C
x	999			Special measuring range (specify in plain text)
			(5)	**Sensor line lengths (probe shaft / filter)**
x	2			2 m shaft length 253 mm (180 °C), stainless steel sinter filter
x	5			5 m shaft length 253 mm (180 °C), stainless steel sinter filter
x	10			10 m shaft length 253 mm (180 °C), stainless steel sinter filter
			(6)	**Extra code**
x	000			none
x	427			Device line connection NPT 1/2" (for wire lines)
x	777			Unit not metric (°F)
x	785			Mounting flange, aluminum
x	786			Mounting flange, stainless steel
x	789			Integrated LCD display/built-in control panel
x	804			PPS plastic grid filter with stainless steel mesh
x	826			2 analog output channels (channel 1 and channel 2), 4 to 20 mA
x	828			Operating instructions in English

[a] The calculated variables T_d, a, T_w, and x are only available if option 15 is selected at the output variables.

	(1)		(2)		(3)		(4)		(5)		(6)	
Order code	[ ]	-	[ ]	-	[ ]	-	[ ]	-	[ ]	/	[ ]	, ...[a]
Order example	907025/65	-	11	-	12	-	474	-	2	/	000	

[a] List extra codes in sequence, separated by commas.

JUMO GmbH & Co. KG
Delivery address: Mackenrodtstraße 14
36039 Fulda, Germany
Postal address: 36035 Fulda, Germany
Phone: +49 661 6003-0
Fax: +49 661 6003-607
Email: mail@jumo.net
Internet: www.jumo.net

JUMO Instrument Co. Ltd.
JUMO House
Temple Bank, Riverway
Harlow, Essex CM 20 2DY, UK
Phone: +44 1279 63 55 33
Fax: +44 1279 62 50 29
Email: sales@jumo.co.uk
Internet: www.jumo.co.uk

JUMO Process Control, Inc.
6733 Myers Road
East Syracuse, NY 13057, USA
Phone: +1 315 437 5866
Fax: +1 315 437 5860
Email: info.us@jumo.net
Internet: www.jumousa.com

			(1)	**Basic type**
	907025/68			Intrinsically safe humidity and temperature measuring probe with a pressure-resistant stainless steel sensor head on a sensor line for process pressures from 0 to 4 MPa (0 to 40 bar), pressure connection ISO 1/2", sensor head with adjustable threaded fitting; operating temperature -70 to +180 °C
			(2)	**Output variables**
x	11			RH + T
x	15			RH + T + T_d + a + T_w + x
			(3)	**Analog output variables channel 1 (and channel 2 optionally)**
x	.	0		For standard use of only one channel please select 0 for channel 2!
x	1	1		RH 0 to 100 % RH
x	2	2		T (see temperature measuring ranges)
x	3	3		T_d[a] -40 to +100 °C
x	4	4		a[a] 0 to 500 g/m^3
x	5	5		T_w[a] 0 to 100 °C
x	6	6		x[a] 0 to 500 g/kg dry air
x	9	9		Special scaling (specify in plain text)
			(4)	**Temperature measuring ranges**
x	474			-40 to +80 °C
x	478			-40 to +120 °C
x	485			-40 to +180 °C
x	635			-20 to +80 °C
x	643			-20 to +120 °C
x	648			-20 to +180 °C
x	814			0 to 100 °C
x	830			0 to 180 °C
x	999			Special measuring range (specify in plain text)
			(5)	**Sensor line lengths (probe shaft / filter)**
x	2			2 m shaft length 226 mm (180 °C), stainless steel sinter filter
x	5			5 m shaft length 226 mm (180 °C), stainless steel sinter filter
x	10			10 m shaft length 226 mm (180 °C), stainless steel sinter filter
			(6)	**Extra code**
x	000			none
x	427			Device line connection NPT 1/2" (for wire lines)
x	777			Unit not metric (°F)
x	787			Ball valve installation kit
x	789			Integrated LCD display/built-in control panel
x	826			2 analog output channels (channel 1 and channel 2), 4 to 20 mA
x	828			Operating instructions in English
x	916			Pressure connection NPT 1/2"

[a] The calculated variables T_d, a, T_w, and x are only available if option 15 is selected at the output variables.

	(1)		(2)		(3)		(4)		(5)		(6)	
Order code		-		-		-		-		/		, ...[a]
Order example	907025/68	-	11	-	12	-	474	-	2	/	000	

[a] List extra codes in sequence, separated by commas.

JUMO GmbH & Co. KG
Delivery address: Mackenrodtstraße 14
36039 Fulda, Germany
Postal address: 36035 Fulda, Germany
Phone: +49 661 6003-0
Fax: +49 661 6003-607
Email: mail@jumo.net
Internet: www.jumo.net

JUMO Instrument Co. Ltd.
JUMO House
Temple Bank, Riverway
Harlow, Essex CM 20 2DY, UK
Phone: +44 1279 63 55 33
Fax: +44 1279 62 50 29
Email: sales@jumo.co.uk
Internet: www.jumo.co.uk

JUMO Process Control, Inc.
6733 Myers Road
East Syracuse, NY 13057, USA
Phone: +1 315 437 5866
Fax: +1 315 437 5860
Email: info.us@jumo.net
Internet: www.jumousa.com

			(1)	**Basic type**
	907025/68L			Intrinsically safe humidity and temperature measuring probe with a pressure-resistant stainless-steel sensor head (long version) on a sensor line for process pressures from 0 to 4 MPa (0 to 40 bar), pressure connection ISO 1/2", sensor head with adjustable threaded fitting; operating temperature -70 to +180 °C
			(2)	**Output variables**
x	11			RH + T
x	15			RH + T + T_d + a + T_w + x
			(3)	**Analog output variables channel 1 (and channel 2 optionally)**
x	.	0		For standard use of only one channel please select 0 for channel 2!
x	1	1		RH 0 to 100 % RH
x	2	2		T (see temperature measuring ranges)
x	3	3		T_d[a] -40 to +100 °C
x	4	4		a[a] 0 to 500 g/m^3
x	5	5		T_w[a] 0 to 100 °C
x	6	6		x[a] 0 to 500 g/kg dry air
x	9	9		Special scaling (specify in plain text)
			(4)	**Temperature measuring ranges**
x	474			-40 to +80 °C
x	478			-40 to +120 °C
x	485			-40 to +180 °C
x	635			-20 to +80 °C
x	643			-20 to +120 °C
x	648			-20 to +180 °C
x	814			0 to 100 °C
x	830			0 to 180 °C
x	999			Special measuring range (specify in plain text)
			(5)	**Sensor line lengths (probe shaft / filter)**
x	2			2 m shaft length 448 mm (180 °C), stainless steel sinter filter
x	5			5 m shaft length 448 mm (180 °C), stainless steel sinter filter
x	10			10 m shaft length 448 mm (180 °C), stainless steel sinter filter
			(6)	**Extra code**
x	000			none
x	427			Device line connection NPT 1/2" (for wire lines)
x	777			Unit not metric (°F)
x	787			Ball valve installation kit
x	789			Integrated LCD display/built-in control panel
x	823			Special sensor for high concentrations of chemicals
x	826			2 analog output channels (channel 1 and channel 2), 4 to 20 mA
x	828			Operating instructions in English
x	916			Pressure connection NPT 1/2"

[a] The calculated variables T_d, a, T_w, and x are only available if option 15 is selected at the output variables.

	(1)		(2)		(3)		(4)		(5)		(6)	
Order code		-		-		-		-		/		, ...[a]
Order example	907025/68L	-	11	-	12	-	474	-	2	/	000	

[a] List extra codes in sequence, separated by commas.

JUMO GmbH & Co. KG
Delivery address: Mackenrodtstraße 14
36039 Fulda, Germany
Postal address: 36035 Fulda, Germany
Phone: +49 661 6003-0
Fax: +49 661 6003-607
Email: mail@jumo.net
Internet: www.jumo.net

JUMO Instrument Co. Ltd.
JUMO House
Temple Bank, Riverway
Harlow, Essex CM 20 2DY, UK
Phone: +44 1279 63 55 33
Fax: +44 1279 62 50 29
Email: sales@jumo.co.uk
Internet: www.jumo.co.uk

JUMO Process Control, Inc.
6733 Myers Road
East Syracuse, NY 13057, USA
Phone: +1 315 437 5866
Fax: +1 315 437 5860
Email: info.us@jumo.net
Internet: www.jumousa.com

Accessories

Description	Part no.
Humidity sensor check: 33 % RH, magnesium chloride	00332758
Humidity sensor check: 53% RH, magnesium nitrate	00332759
Humidity sensor check: 76% RH, sodium chloride	00332760
Stainless steel sinter filter (Ø 12 mm)	00465143
PPS plastic grid filter with stainless steel mesh (Ø 12 mm)	00465144
PPS plastic grid filter without stainless steel mesh (Ø 12 mm)	00465145
Channel installation kit for basic type 907025/63 (Ø 12 mm)	00476927
Stainless steel mounting flange for basic type 907025/65 (Ø 12 mm)	00511237

JUMO GmbH & Co. KG
Delivery address: Mackenrodtstraße 14, 36039 Fulda, Germany
Postal address: 36035 Fulda, Germany
Phone: +49 661 6003-0
Fax: +49 661 6003-607
e-mail: mail@jumo.net
Internet: www.jumo.net

JUMO Instrument Co. Ltd.
JUMO House
Temple Bank, Riverway
Harlow, Essex CM 20 2TT, UK
Phone: +44 1279 635533
Fax: +44 1279 635262
e-mail: sales@jumo.co.uk
Internet: www.jumo.co.uk

JUMO Process Control, Inc.
8 Technology Boulevard
Canastota, NY 13032, USA
Phone: 315-697-JUMO
1-800-554-JUMO
Fax: 315-697-5867
e-mail: info@jumo.us
Internet: www.jumo.us

Capacitive hygrothermal transducers with intelligent interchangeable probes

- **For measuring relative humidity and temperature**
- **Measurement over the entire humidity range from 0 to 100% rH**
- **For operating temperatures from -40 to +80°C**
- **Intelligent interchangeable probes are easy to exchange without readjusting the device electronics**
- **With separate measurement probes option for humidity and temperature**
- **2m, 5m or 10m long adapter cable for probe extension**
- **Special rugged metal housing, can be used in clean rooms**
- **Integrated LC Display (optional)**
- **With standardized current or voltage outputs**
- **For versatile applications in the pharmaceutical industry and for greenhouse, clean room, storage and coldstore applications**

Plug-in measurement probes that can be interchanged within seconds are the main feature of this new series. Because the calibration data is directly stored in the probe, probes can be exchanged without any loss of accuracy. Highly-accurate calibration procedures and state-of-the-art microprocessor technology also ensure reliable measurement and high measuring accuracy over the entire field of application. The outstanding long-term stability is based on years of experience with the capacitive humidity sensors being used.
For applications in higher ambient temperatures, where space is at a premium or just to extend the probes, simply adapt the 2m, 5m or 10m long adapter cables available as options between the measurement probe and the transducer.
The usual voltage outputs 0 - 1V, 0 - 5V, 0 - 10V or 4 - 20mA (2-wire) current outputs are available as output signals and temperature scaling can be customized ex-factory to the required ranges (see order details).
An integrated LC Display option allows the current humidity and temperature vales to be shown alternately.

On-site calibration of humidity and temperature

The loop calibration of humidity and temperature values recommended by the FDA (Food and Drug Administration) in the pharmaceutical and biological engineering industries can easily be performed by means of the rH and T measurement probes that can also be supplied separately, as an option. Function keys are attached to the inside to make it simple to implement a necessary adjustment to the two analog outputs, when required.

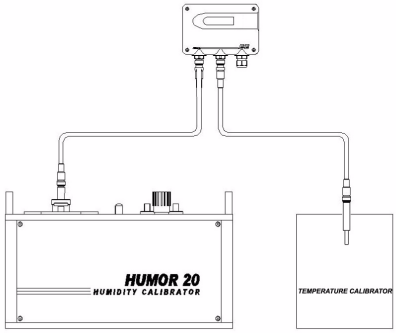

Reference probes

Reference probes are available as accessories to allow you to test the function and accuracy of the measuring loop. The two reference probes can be fitted instead of the interchangeable measurement probes and output fixed humidity and temperature values. Reference probes are supplied together with a test report and simulate a high humidity value and a low temperature value and vice versa (probe 1: 90% rH/5°C and probe 2: 10% rH/45°C). This makes it possible to test the two analog outputs at the top and bottom end of the scaling.

JUMO GmbH & Co. KG
Delivery address: Mackenrodtstraße 14, 36039 Fulda, Germany
Postal address: 36035 Fulda, Germany
Phone: +49 661 6003-0
Fax: +49 661 6003-607
e-mail: mail@jumo.net
Internet: www.jumo.net

JUMO Instrument Co. Ltd.
JUMO House
Temple Bank, Riverway
Harlow, Essex CM 20 2TT, UK
Phone: +44 1279 635533
Fax: +44 1279 635262
e-mail: sales@jumo.co.uk
Internet: www.jumo.co.uk

JUMO Process Control, Inc.
8 Technology Boulevard
Canastota, NY 13032, USA
Phone: 315-697-JUMO
1-800-554-JUMO
Fax: 315-697-5867
e-mail: info@jumo.us
Internet: www.jumo.us

Technical data

Humidity

Sensing element
Type: HC105 capacitive (SMD version, condensation permitted), largely maintenance free in normal, clean air

Measuring/working range
0 to 100 % rH

Medium
air, unpressurized, not corrosive

Accuracy
(incl. hysteresis, non-linearity and repeat accuracy)

±(1.5 + 0.5 % x measured value) % rH; (at <90 % rH; -15 to +40 °C)
±2.5 % rH; (at >90 % rH; -15 to +40 °C)
±(1.7 + 1.5 % x measured value) % rH; (at -40 to +80 °C)

The tolerance data includes the uncertainty of the factory calibration with an expansion factor k = 2 (double the standard deviation). The tolerance is calculated to EA-4/02, taking GUM (Guide to the Expression of Uncertainty in Measurement) into consideration.

Temperature dependence of the electronics
±0.006 % rH/°C

Response time rH
(with stainless steel mesh filter)
typ. <15 s (at 20 °C/$t_{0.9}$)

Temperature

Sensing element
Pt1000 thin film temperature sensor
tolerance class A to DIN EN 60 751

Measuring range
-40 to +60 °C, measurement probes directly on the hygrothermal transducer
-40 to +80 °C, remote measurement probes, by means of the adapter cable

Measuring accuracy

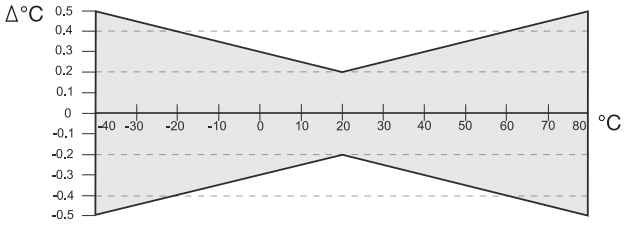

Temperature dependence of the electronics
±0,007 °C/°C

Response time T
(with stainless steel mesh filter)
typ. <3 mins ($t_{0.63}$), with combined measurement probe (rH+T)
typ. <6 mins ($t_{0.63}$), for separate T measurement probe

Analog outputs

0 to 100 % rH/xx to yy °C
(for T scaling, see order details)

0 to 1 V	(-0.5 mA < I_L <0.5 mA)
0 to 5 V/0 to 10 V	(-1 mA < I_L <1 mA)
4 to 20 mA (two-wire)	(R_L <500 ohms)

Temperature sensitivity of the analog outputs

max. 0,2 $\frac{mV}{°C}$ or 1 $\frac{\mu A}{°C}$

Electrical data

Supply for

0 to 1 V	10 to 35 V DC or 9 - 29 V AC
0 to 5 V	12 to 35 V DC or 15 - 29 V AC
0 to 10 V	15 to 35 V DC or 15 - 29 V AC
4 to 20 mA	10 to 35 V DC

Burden (I output)

$$R_L < \frac{Uv - 10V}{0{,}02A} [\Omega]$$

JUMO GmbH & Co. KG
Delivery address: Mackenrodtstraße 14, 36039 Fulda, Germany
Postal address: 36035 Fulda, Germany
Phone: +49 661 6003-0
Fax: +49 661 6003-607
e-mail: mail@jumo.net
Internet: www.jumo.net

JUMO Instrument Co. Ltd.
JUMO House
Temple Bank, Riverway
Harlow, Essex CM 20 2TT, UK
Phone: +44 1279 635533
Fax: +44 1279 635262
e-mail: sales@jumo.co.uk
Internet: www.jumo.co.uk

JUMO Process Control, Inc.
8 Technology Boulevard
Canastota, NY 13032, USA
Phone: 315-697-JUMO
1-800-554-JUMO
Fax: 315-697-5867
e-mail: info@jumo.us
Internet: www.jumo.us

General information

Housing	Al Si 9 Cu 3
Probes	stainless steel 1.4305 (reference probes made of PC plastic)
Dimensions	Housing: 163(135)mm x 90mm x 50mm (W x H x D) (rH/T) probe: 13mm x 91mm (D x L) (T) probe (separate): 12(6)mm x 93mm (D x L)
Cable gland	M 16 x1.5 (Lumberg connector option (RSF 50/11))
Terminals	Screw terminals for cable cross-sections up to 2.5mm^2
Housing protection class	IP65 (IP10 for rear cable entry, IP40 for plain wall mounting)
Ambient temperatures	Measurement probe: -40 to +60°C (+80°C with adapter cable) Electronics: -40 to +60°C Storage temperature: -40 to +60°C
Sensor protection	PTFE filter, pore size: 50µm High chemical resistance, response time $t_{0.1/0.9}$: typ. 14s Stainless steel mesh filter (standard), for average pollution, high mechanical strength, suitable for high humidity applications, response time $t_{0.1/0.9}$: typ. 7s
Weight	approx. 800g

Connection diagrams

Voltage output

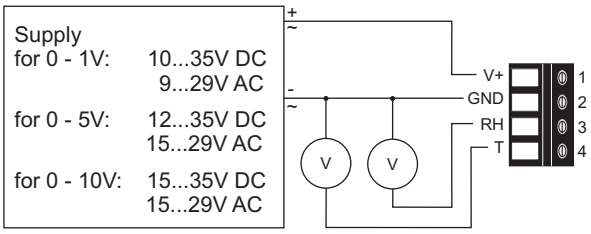

Current output

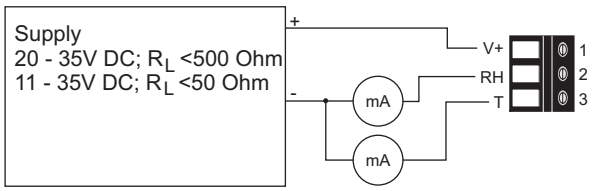

Connection diagrams for a Lumberg connection

Voltage output
Connector for supply and analog outputs
(front view)

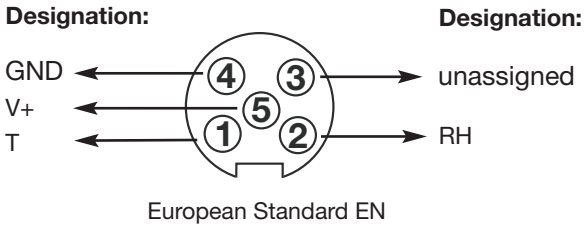

Current output
Connector for supply and analog outputs
(front view)

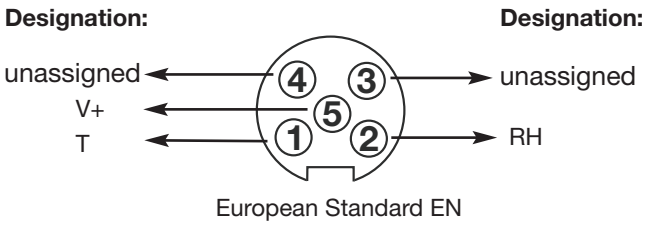

JUMO GmbH & Co. KG
Delivery address: Mackenrodtstraße 14,
36039 Fulda, Germany
Postal address: 36035 Fulda, Germany
Phone: +49 661 6003-0
Fax: +49 661 6003-607
e-mail: mail@jumo.net
Internet: www.jumo.net

JUMO Instrument Co. Ltd.
JUMO House
Temple Bank, Riverway
Harlow, Essex CM 20 2TT, UK
Phone: +44 1279 635533
Fax: +44 1279 635262
e-mail: sales@jumo.co.uk
Internet: www.jumo.co.uk

JUMO Process Control, Inc.
8 Technology Boulevard
Canastota, NY 13032, USA
Phone: 315-697-JUMO
1-800-554-JUMO
Fax: 315-697-5867
e-mail: info@jumo.us
Internet: www.jumo.us

User information

Mounting

Mount the humidity transducer somewhere in the room that is representative for measuring humidity, on walls or on equipment and systems. Avoid siting it near radiators, windows and doors (when measuring indoors, also avoid outside walls) and on powerfully vibrating surfaces or in direct sunlight. The transducer must be protected against dirt, as well as falling or splashing water. Although condensation and splashwater will not damage the transducer, they can cause faulty readings until the probe element has dried out. Dust is not usually damaging, either, but it does reduce the dynamic response.

Maintenance notes

The capacitive humidity sensing element is largely maintenance free in normally clean air. Corrosive media and those containing solvents, can cause faulty readings and even failure. Deposits that ultimately form a water-repellent film on the sensing element, are also harmful. Dirty protective filters must be replaced in good time. You must not touch the surface of the humidity sensor with your hands. Use a soft brush to clean the sensor. Distilled water can also be used for rinsing, but solvents or cleaning agents must not be used. Once the transducer is completely dry, correct measured values should reappear.

Sensor coating

With some industrial processes, heavily polluted and/or corrosive environments can impair the function of the humidity sensor and the measured values may show signs of drift. The sensor coating, available as an option, offers better protection against this (see order details), as it greatly reduces the impact and noticeably improves the long-term stability of the transducer.

Test and calibration

Humidity sensor check sets can be used to test the accuracy of the humidity transducers from time to time. This process is described in more detail in DIN 50 008, IEC publication 260, ISO/R 483-1966. The basic principle is, that an aqueous, saturated saline solution creates a corresponding climate in an enclosed airspace. Sensor check sets with 33% rH, 55% rH and 76% rH values are available ex-stock as accessories. Calibration intervals depend heavily on the particular application. But we recommend that a check is carried out at least once a year.

Warning

Interfering with internal parts will invalidate any warranty claim.

JUMO GmbH & Co. KG
Delivery address: Mackenrodtstraße 14, 36039 Fulda, Germany
Postal address: 36035 Fulda, Germany
Phone: +49 661 6003-0
Fax: +49 661 6003-607
e-mail: mail@jumo.net
Internet: www.jumo.net

JUMO Instrument Co. Ltd.
JUMO House
Temple Bank, Riverway
Harlow, Essex CM 20 2TT, UK
Phone: +44 1279 635533
Fax: +44 1279 635262
e-mail: sales@jumo.co.uk
Internet: www.jumo.co.uk

JUMO Process Control, Inc.
8 Technology Boulevard
Canastota, NY 13032, USA
Phone: 315-697-JUMO
1-800-554-JUMO
Fax: 315-697-5867
e-mail: info@jumo.us
Internet: www.jumo.us

Dimensions

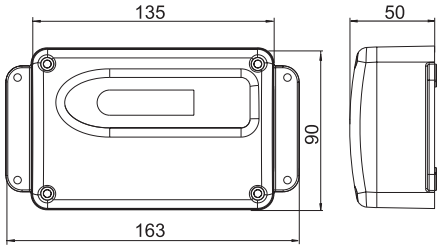

Transducer housing

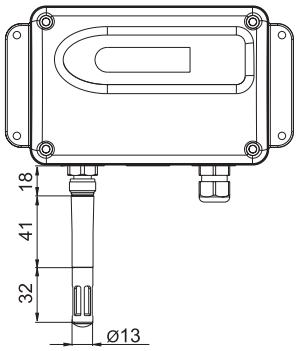

Hygrothermal transducer for wall mounting
with one plug-in rH+T measurement probe

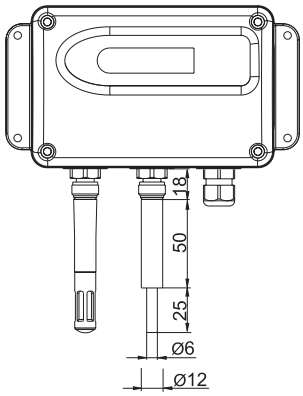

Hygrothermal transducer for wall mounting
with two plug-in rH+T measurement probes

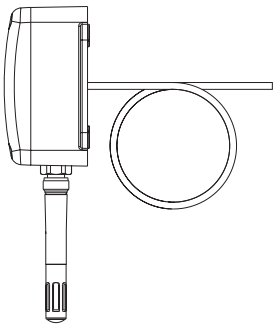

Hygrothermal transducer for wall mounting
with rear cable entry

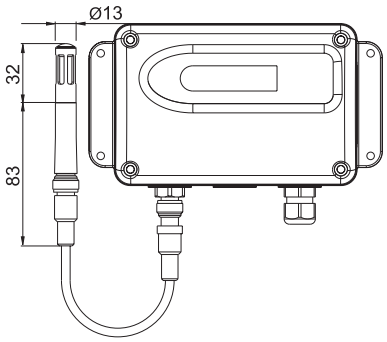

Hygrothermal transducer for wall mounting
with one remote rH+T measurement probe

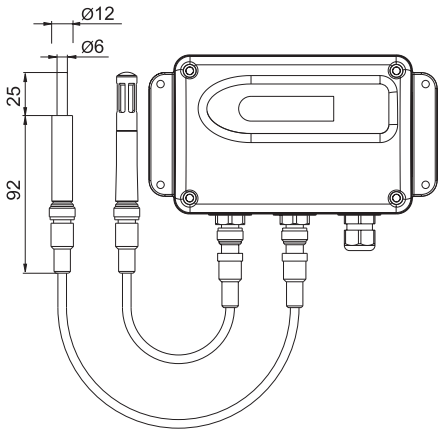

Hygrothermal transducer for wall mounting
with two remote rH+T measurement probes

Measurements in mm.

JUMO GmbH & Co. KG
Delivery address: Mackenrodtstraße 14, 36039 Fulda, Germany
Postal address: 36035 Fulda, Germany
Phone: +49 661 6003-0
Fax: +49 661 6003-607
e-mail: mail@jumo.net
Internet: www.jumo.net

JUMO Instrument Co. Ltd.
JUMO House
Temple Bank, Riverway
Harlow, Essex CM 20 2TT, UK
Phone: +44 1279 635533
Fax: +44 1279 635262
e-mail: sales@jumo.co.uk
Internet: www.jumo.co.uk

JUMO Process Control, Inc.
8 Technology Boulevard
Canastota, NY 13032, USA
Phone: 315-697-JUMO
1-800-554-JUMO
Fax: 315-697-5867
e-mail: info@jumo.us
Internet: www.jumo.us

Order details:

Capacitive hygrothermal transducers with intelligent interchangeable probes

			(1) Basic version
		907027/20	Hygrothermal transducer wall version with combined measurement probe (rH+T)
		907027/21	Hygrothermal transducer wall version with separate measurement probes (rH/T)
			Hardware configuration
			(2) Hygrothermal transducer [1]
x	x	2	humidity and temperature (rH+T)
			(3) Output signals (humidity; temperature)
x	x	051	0 to 1V; 0 to 1V
x	x	057	0 to 5V; 0 to 5V
x	x	065	0 to 10V; 0 to 10V
x	x	005	4 to 20mA; 4 to 20mA
			(4) Cable entry
x	x	10	screwed cable gland (M 16 x 1.5), fitted underneath
x	x	20	cable gland, open at the back (clean room wall mounting)
			(5) Filters
x	x	800	PTFE filter
x	x	889	stainless steel mesh filter (standard)
			(6) Display
x	x	0	without an LC Display (standard)
x	x	1	with an LC Display
			(7) Electrical connection (supply and analog outputs)
x	x	00	terminals (standard)
x		91	Lumberg connection
			(8) Sensor protection
x	x	0	without coating (standard)
x	x	1	with coating
			Software configuration (ex-factory only)
			(9) Temperature unit
x	x	0	°C (standard)
x	x	1	°F
			(10) Measuring ranges
x	x	14	0 to 100% rH; -40 to +60°C
x	x	15	0 to 100% rH; -40 to +80°C
x	x	21	0 to 100% rH; -30 to +60°C
x	x	22	0 to 100% rH; -30 to +70°C
x	x	09	0 to 100% rH; -20 to +60°C
x	x	10	0 to 100% rH; -20 to +80°C (stock version)
x	x	34	0 to 100% rH; 0 to 50°C
x	x	32	0 to 100% rH; 0 to 60°C
x	x	38	0 to 100% rH; 0 to 80°C
x	x	99	special measuring range (on request)

	(1)		(2)		(3)		(4)		(5)		(6)		(7)		(8)		(9)		(10)
Order code		-		-		-		-		-		-		-		-		-	
Order example	907027/20	-	2	-	005	-	10	-	889	-	1	-	00	-	0	-	0	-	14

Note:
Suitable power supply units for hygrothermal transducers can be found in Data Sheet 70.7500.

Stock versions:

(1)		(2)		(3)		(4)		(5)		(6)		(7)		(8)		(9)		(10)	Sales No.
907027/20	-	2	-	005	-	10	-	889	-	0	-	00	-	0	-	0	-	10	90/00503567
907027/21	-	2	-	005	-	10	-	889	-	0	-	00	-	0	-	0	-	10	90/00503568

[1] Adapter cable(s) for probe extensions, 2m, 5m or 10m in length, are available as accessories.

JUMO GmbH & Co. KG
Delivery address: Mackenrodtstraße 14, 36039 Fulda, Germany
Postal address: 36035 Fulda, Germany
Phone: +49 661 6003-0
Fax: +49 661 6003-607
e-mail: mail@jumo.net
Internet: www.jumo.net

JUMO Instrument Co. Ltd.
JUMO House
Temple Bank, Riverway
Harlow, Essex CM 20 2TT, UK
Phone: +44 1279 635533
Fax: +44 1279 635262
e-mail: sales@jumo.co.uk
Internet: www.jumo.co.uk

JUMO Process Control, Inc.
8 Technology Boulevard
Canastota, NY 13032, USA
Phone: 315-697-JUMO
1-800-554-JUMO
Fax: 315-697-5867
e-mail: info@jumo.us
Internet: www.jumo.us

Order details: Accessories

			(1) Basic version
		907027/90	Interchangeable filter
		907027/91	Adapter cables for probe extensions
		907027/92	Replacement probes
		907027/93	Humidity sensor check sets
		907027/94	Reference probes
		907027/95	LC Display conversion kit
			(2) Interchangeable filter
x	800		PTFE filter
x	889		stainless steel mesh filter (standard)
			(2) Adapter cables for probe extensions
x	02		2 m
x	05		5 m
x	10		10 m
			(2) Replacement probes
x	884		individual measurement probe (T), stainless steel housing
x	885		combined measurement probe (rH+T), stainless steel housing, mesh filter (standard)
x	886		combined measurement probe (rH+T), stainless steel housing, PTFE filter
			(2) Humidity sensor check sets
x	820		33 % rH magnesium chloride
x	821		53 % rH magnesium nitrate
x	822		76 % rH sodium chloride
			(2) Reference probes
x	883		reference set (with 2 measurement probes (rH+T), fixed, simultaneous values)
			(2) LC Display conversion kit
x	882		LC Display, including metal housing cover

	(1)		(2)
Order code		-	
Order example	907027/90	-	889

Stock versions:

(1)		(2)	Sales No.
	-		
907027/90	-	800	90/00503575
907027/90	-	889	90/00503576
907027/91	-	02	90/00503577
907027/91	-	05	90/00503578
907027/91	-	10	90/00503579
907027/93	-	820	90/00332758
907027/93	-	821	90/00332759
907027/93	-	822	90/00332760

JUMO GmbH & Co. KG
Delivery address: Mackenrodtstraße 14, 36039 Fulda, Germany
Postal address: 36035 Fulda, Germany
Phone: +49 661 6003-0
Fax: +49 661 6003-607
e-mail: mail@jumo.net
Internet: www.jumo.net

JUMO Instrument Co. Ltd.
JUMO House
Temple Bank, Riverway
Harlow, Essex CM20 2DY, UK
Phone: +44 1279 635533
Fax: +44 1279 635262
e-mail: sales@jumo.co.uk
Internet: www.jumo.co.uk

JUMO Process Control, Inc.
8 Technology Boulevard
Canastota, NY 13032, USA
Phone: 315-697-JUMO
1-800-554-JUMO
Fax: 315-697-5867
e-mail: info@jumo.us
Internet: www.jumo.us

Hygro/hygrothermal transducers (hygrometric)

Duct version

- **for measuring relative humidity and temperature**
- **for mounting indoors, outdoors, and in air ducts**
- **with resistance, current or voltage outputs**
- **for permanent use in the high-humidity range up to 100 % RH (duct version)**
- **no power supply necessary for passive instruments**
- **sensing element does not need any maintenance in clean air (no regeneration necessary)**

Humidity transducers in the 907031 series make use of the hygroscopic property of specially prepared plastic fibers to determine relative humidity in air. After this preparation, the integrated humidity sensing element is capable of absorbing moisture. The effect that can be measured externally is a change in length. A precision mechanism senses the humidity-dependent change in length, transmits this movement to the slider of a resistive track and produces it as a linearized resistance output at the terminals.

The standard output is 100 to 138.5 Ω, thus corresponding to a Pt100 signal. This enables the direct connection to standard measurement, control and recording instruments, for processing the measurement signal.

Other instrument versions with different resistance outputs, with normalized current or voltage output signals as well as humidity transducers with additional temperature acquisition complete the product spectrum.

The humidity transducers are suitable for both climatic applications and industrial humidity measurement. Of particular advantage is the fact that the sensing element is highly resistant to water, which permits continuous use in the high-humidity range, up to saturation level. Under normal atmospheric conditions, the sensing element requires practically no maintenance. Any dirt deposits resulting from dust-laden air can be washed off. The working range of the sensing element covers 30 to 100 % RH at permissible ambient temperatures from -40 to +80 °C. Instrument versions with a passive output offer the additional advantage of not needing a power supply of their own for operation.

General applications include climate monitoring, ventilation, humidifying and de-humidifying installations, storage of fruit and vegetables as well as ripening areas for food.

Indoor version

Technical data

Humidity

Sensing element:	plastic, hygrometric sensing element is water-resistant and largely maintenance-free
Measuring/working range:	0/30 to 100 % RH
Measuring accuracy:	±2.5 % RH above 40 % RH to tolerance characteristic below 40 % RH TK = 0.1 % RH/°C (referred to 20 °C and 50 % RH)
Medium:	air, unpressurized, not corrosive
Permissible air velocity:	duct version: 8 m/sec max. (15 m/sec with wind shield) indoor version: 15 m/sec max.
Response times:	50 % time: 1.5 min at v = 2 m/sec stabilization time: 30 to 40 min at v = 2 m/sec
Humidity output (passive):	0 to 100 Ω linear, 2-wire circuit 0 to 200 Ω linear, 2-wire circuit 0 to 1000 Ω linear, 2-wire circuit 100 to 138.5 Ω linear, 2-wire circuit (Pt100 standard values, see Data Sheet 906000)
Permissible loading:	1.0 W
Electric strength:	42 V
Insulation resistance:	10 MΩ
Humidity output (active):	0 to 20 mA, 4-wire circuit 4 to 20 mA, 2-wire circuit 0 to 10 V, 3-/4-wire circuit

JUMO GmbH & Co. KG
Delivery address: Mackenrodtstraße 14, 36039 Fulda, Germany
Postal address: 36035 Fulda, Germany
Phone: +49 661 6003-0
Fax: +49 661 6003-607
e-mail: mail@jumo.net
Internet: www.jumo.net

JUMO Instrument Co. Ltd.
JUMO House
Temple Bank, Riverway
Harlow, Essex CM20 2DY, UK
Phone: +44 1279 635533
Fax: +44 1279 635262
e-mail: sales@jumo.co.uk
Internet: www.jumo.co.uk

JUMO Process Control, Inc.
8 Technology Boulevard
Canastota, NY 13032, USA
Phone: 315-697-JUMO
1-800-554-JUMO
Fax: 315-697-5867
e-mail: info@jumo.us
Internet: www.jumo.us

Technical data

Temperature

Sensing element:	Pt100 temperature sensor to EN 60751
Measuring range:	duct version, passive: -40 to +80 °C (take note of permissible ambient temperature) duct version, active: -30 to +100 °C (take note of permissible ambient temperature) indoor version, passive: 0 to 60 °C
Measuring accuracy:	±0.5 °C
Temperature output (passive):	Pt100
Measuring current:	1 mA (recommended)
or current/voltage signal:	0 to 20 mA, 4-wire circuit 4 to 20 mA, 2-wire circuit 0 to 10 V, 3-/4-wire circuit

Electrical data for active versions with transmitter

Supply voltage:	15 to 30 V DC also 24 V AC ±10 % (for 0 to 10 V output)
Burden:	500 Ω max. for current output
Load resistance:	10 kΩ min. for voltage output
Power consumption:	5 mA per measuring range, 10 mA with AC version
Linearity error:	<0.5 % for temperature output
Output signals:	0 to 20 mA; 4 to 20 mA; 0 to 10 V
Electromagnetic compatibility:	EN 61326

Construction

Housing:	duct version: ABS plastic fitted with stainless steel probe indoor version: ABS plastic
Cable entry:	duct version: via M20 × 1.5 gland indoor version: via flush-type box
Terminals:	for conductor cross-sections up to 0.5 mm²
Protection:	duct version: IP64 indoor version: IP20
Ambient temperature:	duct version: -20 to +60 °C on housing, -40 to +80 °C on probe indoor version: 0 to 60 °C
Operating position:	probe tube vertically downwards or horizontal, mounted directly through openings in housing or, optionally, by mounting flange. On indoor version unrestricted, the ventilation slots preferably at right angles to the air flow.
Weight:	duct version: approx. 400 g indoor version: approx. 200 g

JUMO GmbH & Co. KG
Delivery address: Mackenrodtstraße 14, 36039 Fulda, Germany
Postal address: 36035 Fulda, Germany
Phone: +49 661 6003-0
Fax: +49 661 6003-607
e-mail: mail@jumo.net
Internet: www.jumo.net

JUMO Instrument Co. Ltd.
JUMO House
Temple Bank, Riverway
Harlow, Essex CM20 2DY, UK
Phone: +44 1279 635533
Fax: +44 1279 635262
e-mail: sales@jumo.co.uk
Internet: www.jumo.co.uk

JUMO Process Control, Inc.
8 Technology Boulevard
Canastota, NY 13032, USA
Phone: 315-697-JUMO
1-800-554-JUMO
Fax: 315-697-5867
e-mail: info@jumo.us
Internet: www.jumo.us

Maintenance notes

Humidity sensor

The hygrometric sensor requires no maintenance in normally clean air. Corrosive media or those containing solvents may cause faulty readings or failure depending on the type and concentration. As is the case with nearly all humidity sensors, any deposits that may form a water-repellent film on the sensor are liable to cause damage, for instance, resin aerosols, paint aerosols or fumigating substances.

Avoid direct sunlight.

Indoor version

Cleaning and adjustment of the sensor can only be carried out in the factory.

Duct version

The special sensing element is water-resistant and can be cleaned in water. Do not use strong solvents. When using gentle detergents, rinse the sensing element thoroughly afterwards. Only rinse the plastic sensing element and the stainless steel sheath in water, not the housing head.

Calibration

A special ageing process ensures long-term stability of the humidity sensing element. The regeneration known from hair sensor elements is not required.

The transducers are factory-calibrated at 23 °C room temperature and 50 % RH. The calibration can be checked (on the duct version only) using the sensor checks that are available as accessories. In addition, the sensor will indicate 100 % RH when the sensing element is wetted with water. Should recalibration become necessary, this can be done by carefully adjusting the setting screw at the tip of the sheath. Please note that a very slight movement of the adjusting screw when the sensing element is wet will produce a fairly large change in the calibration in the dry range.

Drying

After cleaning, the humidity sensor must not be dried with warm or hot air, by using a hair drier, for example.

Caution

Interference with internal parts will invalidate any warranty claim.

Humidity tolerance characteristic

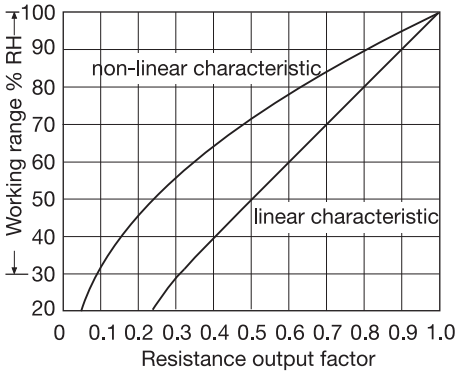

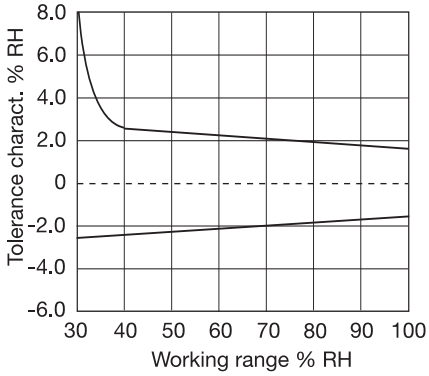

Step response for Polyga

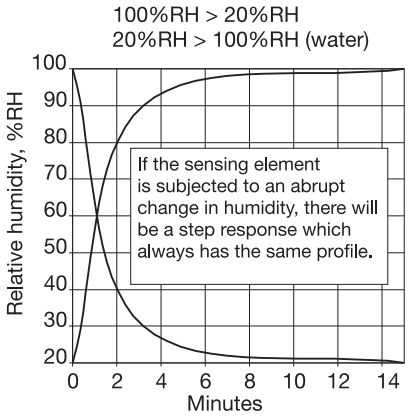

Reaction of the Polyga sensing element

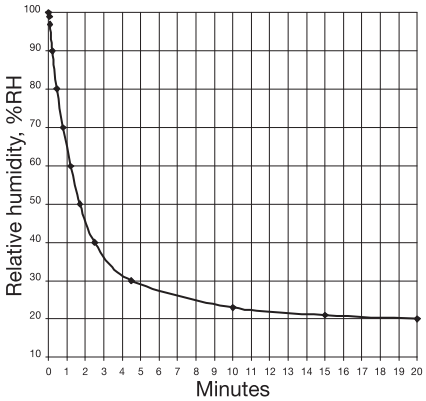

JUMO GmbH & Co. KG
Delivery address: Mackenrodtstraße 14, 36039 Fulda, Germany
Postal address: 36035 Fulda, Germany
Phone: +49 661 6003-0
Fax: +49 661 6003-607
e-mail: mail@jumo.net
Internet: www.jumo.net

JUMO Instrument Co. Ltd.
JUMO House
Temple Bank, Riverway
Harlow, Essex CM20 2DY, UK
Phone: +44 1279 635533
Fax: +44 1279 635262
e-mail: sales@jumo.co.uk
Internet: www.jumo.co.uk

JUMO Process Control, Inc.
8 Technology Boulevard
Canastota, NY 13032, USA
Phone: 315-697-JUMO
1-800-554-JUMO
Fax: 315-697-5867
e-mail: info@jumo.us
Internet: www.jumo.us

Dimensions

Indoor version

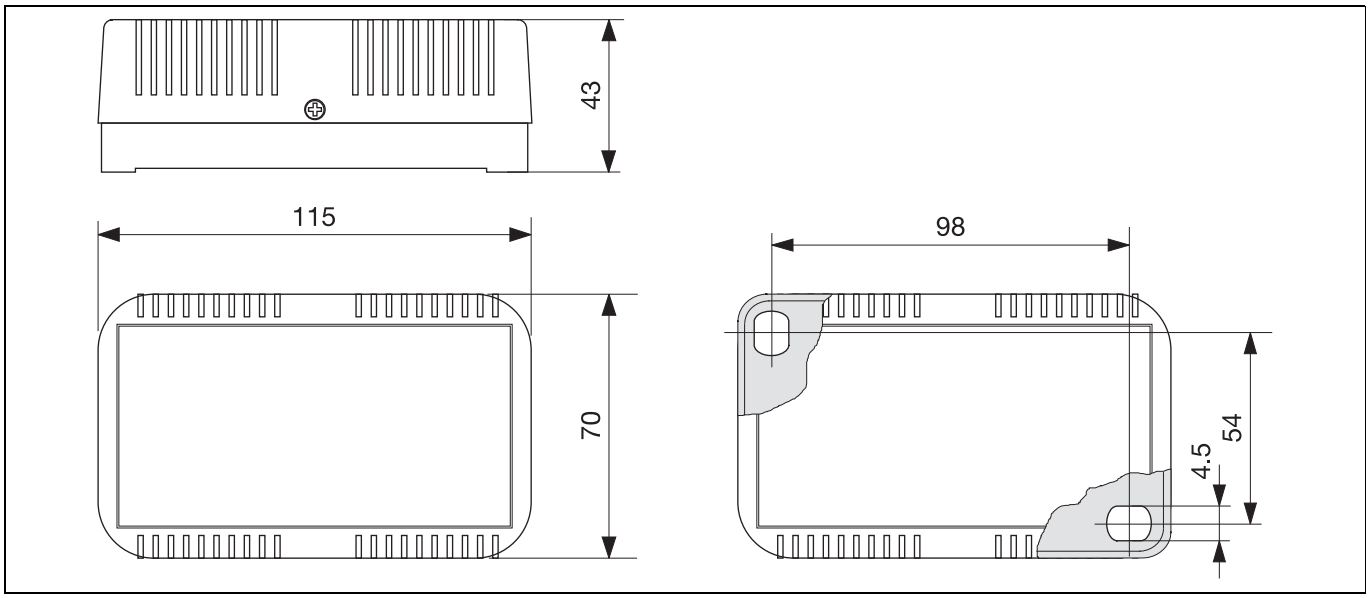

Duct version

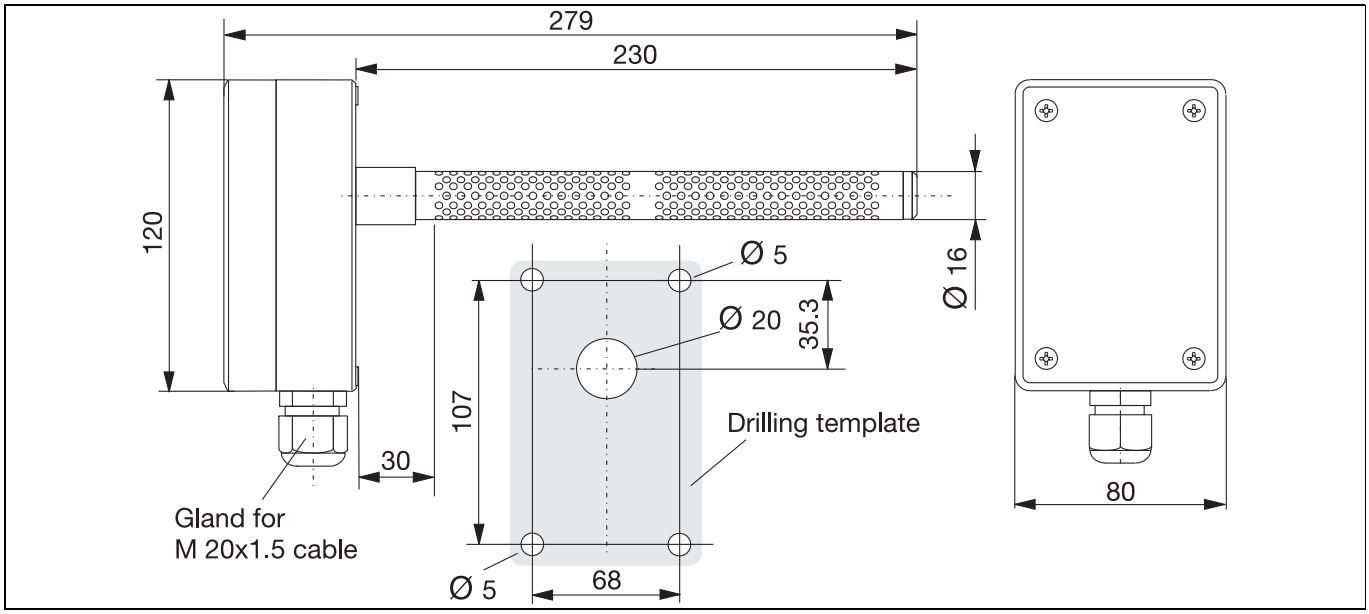

Accessories

Mounting bracket

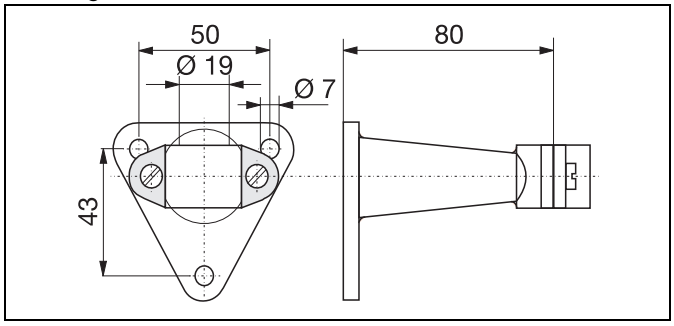

Sheath for outdoor mounting (sun and rain protection)

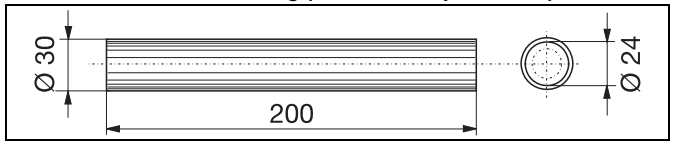

Sheath for indoor and outdoor mounting (wind shield)

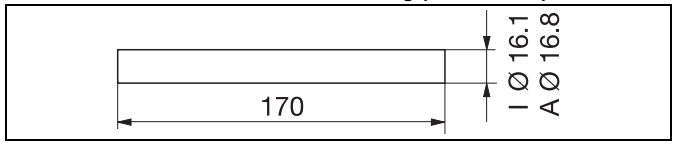

JUMO GmbH & Co. KG
Delivery address: Mackenrodtstraße 14, 36039 Fulda, Germany
Postal address: 36035 Fulda, Germany
Phone: +49 661 6003-0
Fax: +49 661 6003-607
e-mail: mail@jumo.net
Internet: www.jumo.net

JUMO Instrument Co. Ltd.
JUMO House
Temple Bank, Riverway
Harlow, Essex CM20 2DY, UK
Phone: +44 1279 635533
Fax: +44 1279 635262
e-mail: sales@jumo.co.uk
Internet: www.jumo.co.uk

JUMO Process Control, Inc.
8 Technology Boulevard
Canastota, NY 13032, USA
Phone: 315-697-JUMO
1-800-554-JUMO
Fax: 315-697-5867
e-mail: info@jumo.us
Internet: www.jumo.us

Connection diagrams

Connection diagram for passive transducers with resistance output

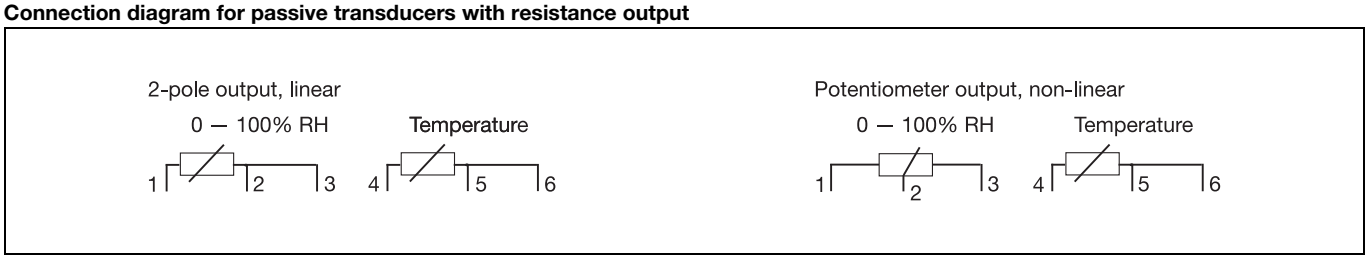

Connection diagram for active transducers, supply voltage 15 to 30 V DC (24 V AC only with 0 to 10 V DC output)

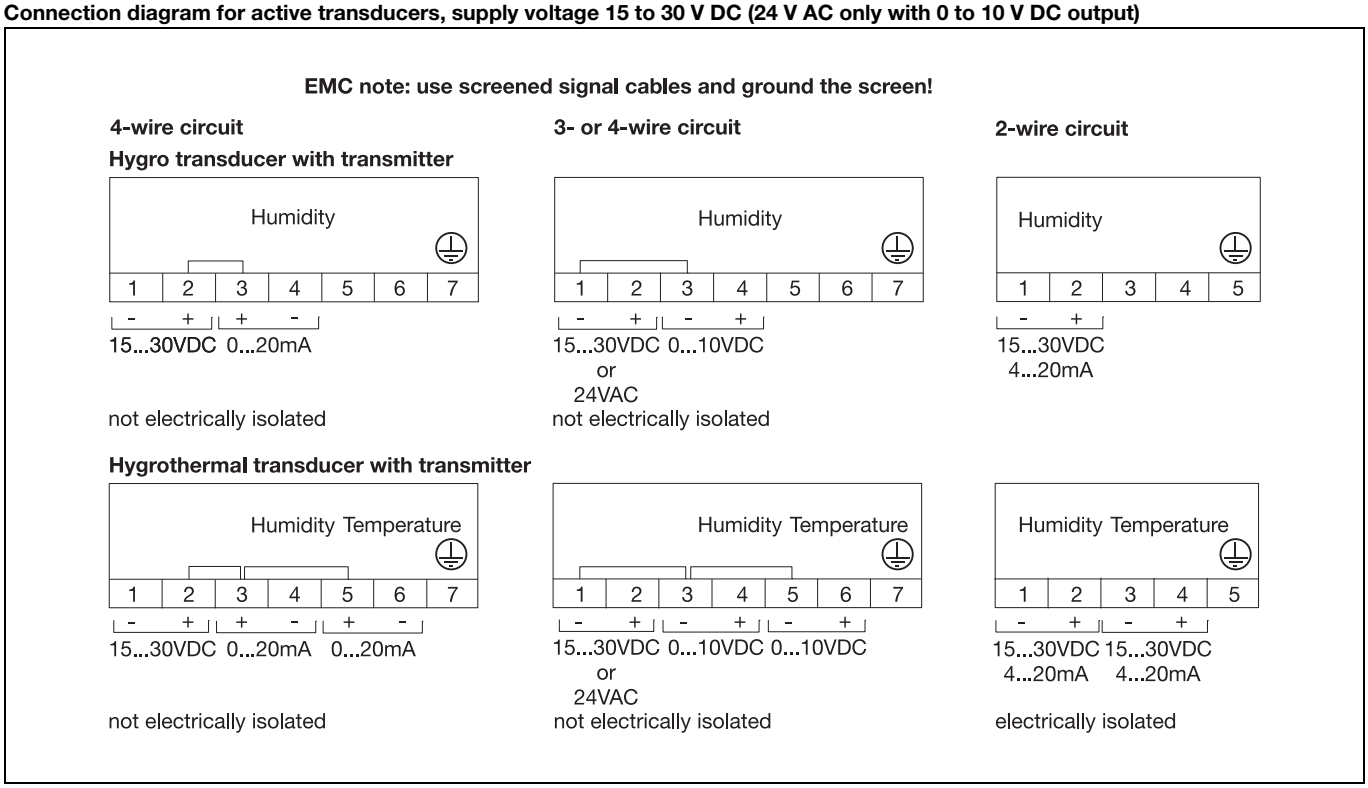

Block diagram for 2-wire circuit 4 to 20 mA

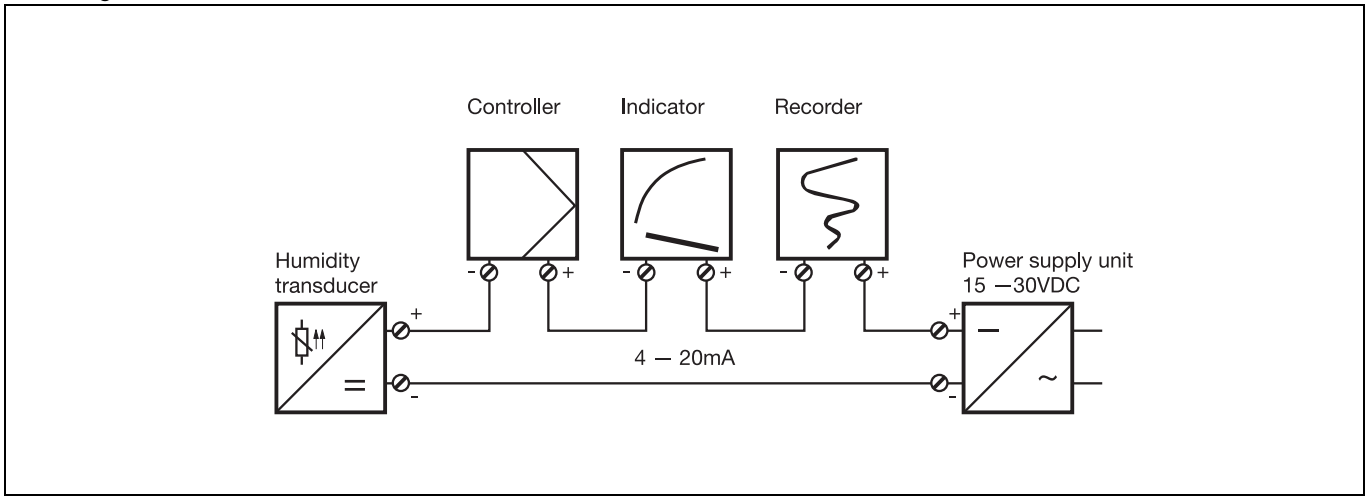

JUMO GmbH & Co. KG
Delivery address: Mackenrodtstraße 14, 36039 Fulda, Germany
Postal address: 36035 Fulda, Germany
Phone: +49 661 6003-0
Fax: +49 661 6003-607
e-mail: mail@jumo.net
Internet: www.jumo.net

JUMO Instrument Co. Ltd.
JUMO House
Temple Bank, Riverway
Harlow, Essex CM20 2DY, UK
Phone: +44 1279 635533
Fax: +44 1279 635262
e-mail: sales@jumo.co.uk
Internet: www.jumo.co.uk

JUMO Process Control, Inc.
8 Technology Boulevard
Canastota, NY 13032, USA
Phone: 315-697-JUMO
1-800-554-JUMO
Fax: 315-697-5867
e-mail: info@jumo.us
Internet: www.jumo.us

Order details: Hygro/hygrothermal transducers (hygrometric)

				(1)	**Basic type**
			907031/10		Hygro/hygrothermal transducer, indoor version (passive)
			907031/20		Hygro/hygrothermal transducer, duct version (passive)
			907031/30		Hygro/hygrothermal transducer, duct version (active)
				(2)	**Hygro/hygrothermal transducers**
x	x	x	1		humidity (1-channel-output)
		x	2		humidity and temperature
x	x		3		humidity and temperature (temperature passive)
				(3)	**Ranges**[1]
		x	21		0 to 100 % RH/-30 to +60 °C
	x		15		0 to 100 % RH/-40 to +80 °C
x			32		0 to 100 % RH/0 to 60 °C
		x	36		0 to 100 % RH/0 to 100 °C
x	x	x	99		special range (on request)
				(4)	**Output signals (humidity / temperature)**[2]
x	x		016		0 to 100 Ω (2-pole output, linear)/Pt100 (passive)
x	x		017		0 to 200 Ω (2-pole output, linear)/Pt100 (passive)
x	x		019		0 to 1000 Ω (2-pole output, linear)/Pt100 (passive)
x	x		021		100 to 138.5 Ω (2-pole output, linear)/Pt100 (passive)
		x	005		4 to 20 mA/4 to 20 mA
		x	011		0 to 20 mA/0 to 20 mA
		x	065		0 to 10 V DC/0 to 10 V DC
x	x	x	999		special output (on request)
				(5)	**Extra codes**
x	x	x	000		no extra code

	(1)		(2)		(3)		(4)		(5)
Order code		-		-		-		/	
Order example	907031/10	-	1	-	32	-	021	/	000

Note
Suitable power supply units for transmitters can be found in Data Sheet 707500.
Recommended power supply units: Type TN-22/02, 055 (1-channel) and TN-67/02, 055 (4-channel)

Stock versions

Order code	Part No.
907031/10-1-32-021/000	90/90590502
907031/10-3-32-021/000	90/90590507
907031/20-1-15-021/000	90/90590512
907031/20-3-15-021/000	90/90590517
907031/30-1-21-005/000	90/90590541
907031/30-2-21-005/000	90/90590544

1. Please note humidity working range and max. permissible ambient temperature (see Technical data).
2. With selection (2) type code 1 “humidity”, the second output signal is not applicable with selection (4).

JUMO GmbH & Co. KG
Delivery address: Mackenrodtstraße 14, 36039 Fulda, Germany
Postal address: 36035 Fulda, Germany
Phone: +49 661 6003-0
Fax: +49 661 6003-607
e-mail: mail@jumo.net
Internet: www.jumo.net

JUMO Instrument Co. Ltd.
JUMO House
Temple Bank, Riverway
Harlow, Essex CM20 2DY, UK
Phone: +44 1279 635533
Fax: +44 1279 635262
e-mail: sales@jumo.co.uk
Internet: www.jumo.co.uk

JUMO Process Control, Inc.
8 Technology Boulevard
Canastota, NY 13032, USA
Phone: 315-697-JUMO
1-800-554-JUMO
Fax: 315-697-5867
e-mail: info@jumo.us
Internet: www.jumo.us

Order details: Accessories

				(1) Basic type
			907031/90	Mounting bracket for duct version
			907031/91	Sheath for duct version
			907031/92	Mounting flange for duct version
			907031/93	Humidity sensor checks
				(2) Mounting bracket for duct version
x			764	Wall bracket (black plastic)
				(2) Sheath for duct version
	x		797	wind shield (indoor and outdoor mounting)
	x		798	sun and rain protection (outdoor mounting)
		x	811	PTFE filter tube (2-sectional)
				(2) Mounting flange for duct version
		x	799	oval mounting flange (galvanized steel)
				(2) Extra codes
		x	820	33 % RH magnesium chloride
		x	821	53 % RH magnesium nitride
		x	822	76 % RH sodium chloride

	(1)		(2)
Order code		-	
Order example	907031/90	-	764

Stock versions

Order code	Part No.
907031/90-764	90/60171300
907031/91-797	90/00323439
907031/91-798	90/00321186
907031/91-811	90/00491789
907031/92-799	90/60677200
907031/93-820	90/00332758
907031/93-821	90/00332759
907031/93-822	90/00332760

JUMO GmbH & Co. KG
Delivery address: Mackenrodtstraße 14, 36039 Fulda, Germany
Postal address: 36035 Fulda, Germany
Phone: +49 661 6003-0
Fax: +49 661 6003-607
e-mail: mail@jumo.net
Internet: www.jumo.net

JUMO Instrument Co. Ltd.
JUMO House
Temple Bank, Riverway
Harlow, Essex CM20 2DY, UK
Phone: +44 1279 635533
Fax: +44 1279 635262
e-mail: sales@jumo.co.uk
Internet: www.jumo.co.uk

JUMO Process Control, Inc.
8 Technology Boulevard
Canastota, NY 13032, USA
Phone: 315-697-JUMO
1-800-554-JUMO
Fax: 315-697-5867
e-mail: info@jumo.us
Internet: www.jumo.us

Hygrostats (hygrometric)

- For easy 2-state control of relative air humidity
- For indoor and air duct mounting
- With potential-free change-over contact(s)
- No voltage supply required (passive operation)
- Measuring element is maintenance-free when operated in normal clean ambient air

Indoor version
Basic type 907032/10

Brief description

Hygrostats of the 907032 series use the hygroscopic properties of specially prepared plastic fibres to detect relative air humidity. Once prepared, the hair measuring element is capable of absorbing moisture. The changing length is the externally measured effect that is transmitted to a micro switch with extremely small change-over path via a lever system.

Values set via the set point value rotary knob also act as an intervention to the lever system such that a micro switch is actuated when the set air humidity is reached. The change-over contact can be operated as N/C or N/O contact (humidification/dehumidification) depending on the application.

Hygrostats in duct version are also available with a double change-over contact in addition to the standard version. The switching point of the second micro switch is directly coupled to that of the first micro switch, however, it can be precisely set between 0 to 15 % rel. humidity (neutral zone) on the micro switch lever by means of a screwdriver after removing the case lid.

All indoor and duct versions are optionally available with a covered set point value setter (fitted beneath the case lid). This can almost fully exclude misadjustment of the switching point.

Application

Hygrostats are preferably used as simple 2-state controllers to control the relative air humidity in conditioning cabinets and air ducts as well as to control air humidifiers and dehumidifiers in the building services engineering. Further application areas are, for example, storage for foodstuffs and luxury food, cold rooms for fruit and vegetables, glasshouses for garden centers, textile, paper and print industry as well as hospitals.

The high water resistance of the measuring element is particularly advantageous. The duct version, for instance, can be used permanently in high moisture areas, even up to a complete saturation. Moreover, in normal circulated air the measuring element is almost maintenance free.

A further advantage is that this indoor and duct version with hair measuring element does not require any operating voltage. Thus, an easy installation without any power current in the vicinity is possible.

Duct version
Basic type 907032/20

JUMO GmbH & Co. KG
Delivery address: Mackenrodtstraße 14, 36039 Fulda, Germany
Postal address: 36035 Fulda, Germany
Phone: +49 661 6003-0
Fax: +49 661 6003-607
e-mail: mail@jumo.net
Internet: www.jumo.net

JUMO Instrument Co. Ltd.
JUMO House
Temple Bank, Riverway
Harlow, Essex CM20 2DY, UK
Phone: +44 1279 635533
Fax: +44 1279 635262
e-mail: sales@jumo.co.uk
Internet: www.jumo.co.uk

JUMO Process Control, Inc.
8 Technology Boulevard
Canastota, NY 13032, USA
Phone: 315-697-JUMO
1-800-554-JUMO
Fax: 315-697-5867
e-mail: info@jumo.us
Internet: www.jumo.us

Technical data

Humidity

	Indoor version	Duct version
Sensing element	Plastic hair measuring element (hygrometric) Measuring element is water resistant and almost maintenance-free, the duct version can be washed.	
Scale range	30 to 100 % rel. humidity	
Working/setting range	35 to 95 % rel. humidity	
Hysteresis	approx. 4 % rel. humidity (micro switch related to 50 % rel. humidity)	
Switching gap	-	0 to 15 % rel. humidity (with 2 micro switches)
Measuring accuracy at 23 °C	± 3.0 % rel. humidity at > 40 % rel. humidity ± 5.0 % rel. humidity at < 40 % rel. humidity	± 3.5 % rel. humidity at > 50 % rel. humidity ± 4.0 % rel. humidity at < 50 % rel. humidity
Average temperature coefficient	-0.2 % rel. humidity/K (related to 20 °C and 50 % rel. humidity)	
Medium	Air, atmospheric pressure, non corrosive	
Admissible air speed	max. 15 m/s	max. 8 m/s, with wind protection max. 15 m/s
Response times	1.5 min; $t_{0.5}$ at v = 2 m/s	
Compensation time	20 to 40 min; depending on the air flow	

Electrical data

	Indoor version	Duct version
Micro switch	Switching voltage ≤ AC 250 V	
Switching capacity		
- with silver contact	Maximum load AC 250 V and 0.1 to 5 A at ohmic load for dehumidification 0.1 to 2 A at ohmic load for humidification 0.1 to 1 A at inductive load with cos phi = 0.7	Minimum load AC 125 V and 100 mA
- with gold contact (optional)	Maximum load AC 48 V and 1 to 100 mA	-
Contact rating		15 A/AC 230 V with ohmic load (cos phi = 1) 2 A/AC 230 V with inductive load (cos phi = 0.7) 0.25 A/DC 230 V with direct current
Operating life	100.000 switching cycles	
Electromagnetic compatibility	Directive 2006/95/EC DIN EN 60730-1, Revision 12/05 DIN EN 60730-2-13, Revision 09/02	

Information about the switching voltage

Select the humidity controller measuring location such that no condensate will form on or in the device. This particularly applies when the voltage exceeds 48 V. A higher voltage bears the risk that sparkovers could appear on the micro switch or the connection terminals due to condensate and, thus, destroy the controller. If the voltage remains below 48 V, the humidity controller can be used up to 100 % rel. humidity.

JUMO GmbH & Co. KG
Delivery address: Mackenrodtstraße 14, 36039 Fulda, Germany
Postal address: 36035 Fulda, Germany
Phone: +49 661 6003-0
Fax: +49 661 6003-607
e-mail: mail@jumo.net
Internet: www.jumo.net

JUMO Instrument Co. Ltd.
JUMO House
Temple Bank, Riverway
Harlow, Essex CM20 2DY, UK
Phone: +44 1279 635533
Fax: +44 1279 635262
e-mail: sales@jumo.co.uk
Internet: www.jumo.co.uk

JUMO Process Control, Inc.
8 Technology Boulevard
Canastota, NY 13032, USA
Phone: 315-697-JUMO
1-800-554-JUMO
Fax: 315-697-5867
e-mail: info@jumo.us
Internet: www.jumo.us

Construction

	Indoor version	Duct version
Case	PC plastic	ABS plastic with attached stainless steel measuring probe
Cable entry	via rear opening	via cable screw connection M 20x1.5
Contacts	via connection terminals for cable cross section up to 1.5 mm^2	
Protection rating	IP30D	IP54 (external set point value setter) IP64 (internal set point value setter)
Ambient temperature	-30 to +60 °C	-30 to +60 °C -40 to +80 °C (on the measuring probe)
Operating temperature	0 to 60 °C	0 to 60 °C
Installation position	any, the ventilation slits should preferably run at right angles in relation to the air flow	Probe tube vertically downward or horizontal; Fastening directly through openings in the case or optionally by means of a fastening flange.
Weight	approx. 60 g	approx. 700 g

Maintenance instructions

Humidity measuring element

The hygrometric measuring element is maintenance-free when operated in normal clean ambient air. However, aggressive media or those containing solvents may cause faulty readings and failure depending on the type and concentration.

As for almost all humidity measuring elements, condensation forming a water repellent film on the measuring element is damaging such as, e.g. resin aerosol, lacquer aerosol and smoke substances.

Avoid direct sun radiation.

Indoor version

Cleaning and adjustment of the measuring element is only possible in the factory.

Duct version

The measuring element can be cleaned with water due to its water resistance. Do not use strong solvents. When using mild detergent, thoroughly rinse the measuring element afterwards. Furthermore, only the plastic measuring element and the stainless steel sheath can be cleaned with water but not the case head.

Calibration

Due to a special aging process, the humidity measuring elements have good long-term stability. Regeneration as known from hair measuring elements is not required.

The hygrostats are factory calibrated at a room temperature of 23 °C and 50 % rel. humidity. They can be checked (only duct version) using the humidity probe checks supplied in the accessories (33 %, 53 % or 76 % rel. humidity). Furthermore, the hygrostat displays 100 % rel. humidity when the measuring element is wetted with water. If readjustment is necessary, use a screwdriver to sensitively turn the setscrew provided at the sheath tip. Note that small setscrew adjustments on the wet measuring element results in large measured value adjustments in dry zones.

Drying

Never dry the humidity measuring element after cleaning using warm or hot air, e.g. by means of a hairdryer.

Note

Any manipulations of the internal components will lead to warranty claims becoming null and void.

JUMO GmbH & Co. KG
Delivery address: Mackenrodtstraße 14, 36039 Fulda, Germany
Postal address: 36035 Fulda, Germany
Phone: +49 661 6003-0
Fax: +49 661 6003-607
e-mail: mail@jumo.net
Internet: www.jumo.net

JUMO Instrument Co. Ltd.
JUMO House
Temple Bank, Riverway
Harlow, Essex CM20 2DY, UK
Phone: +44 1279 635533
Fax: +44 1279 635262
e-mail: sales@jumo.co.uk
Internet: www.jumo.co.uk

JUMO Process Control, Inc.
8 Technology Boulevard
Canastota, NY 13032, USA
Phone: 315-697-JUMO
1-800-554-JUMO
Fax: 315-697-5867
e-mail: info@jumo.us
Internet: www.jumo.us

Dimensions

Indoor version

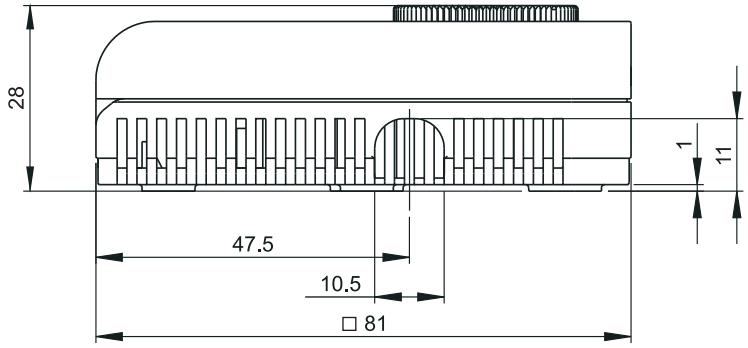

Duct version

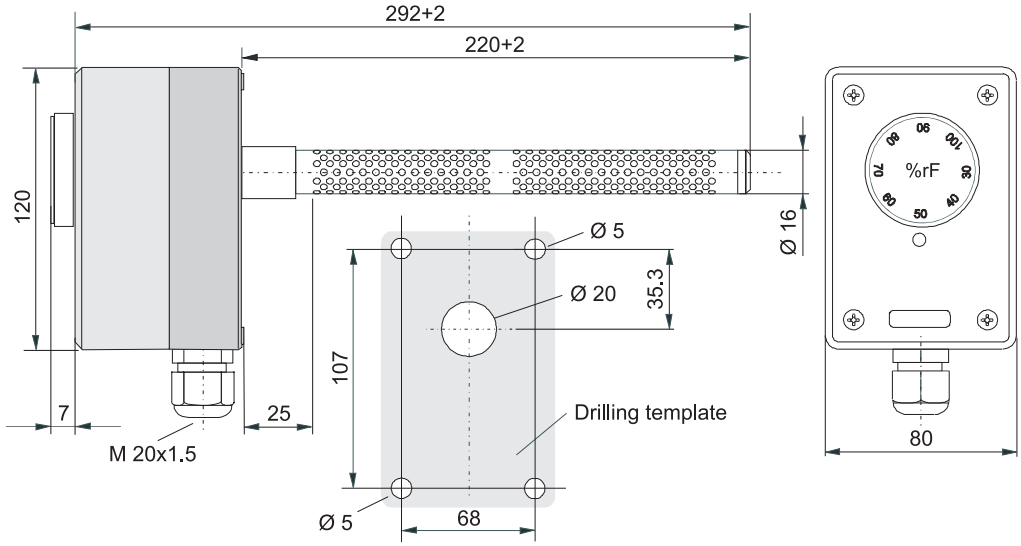

Accessories

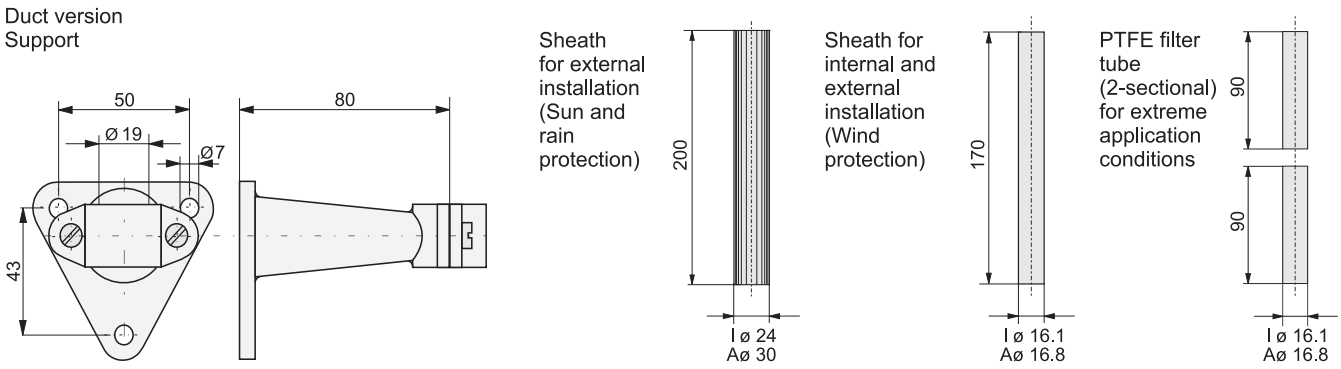

JUMO GmbH & Co. KG
Delivery address: Mackenrodtstraße 14, 36039 Fulda, Germany
Postal address: 36035 Fulda, Germany
Phone: +49 661 6003-0
Fax: +49 661 6003-607
e-mail: mail@jumo.net
Internet: www.jumo.net

JUMO Instrument Co. Ltd.
JUMO House
Temple Bank, Riverway
Harlow, Essex CM20 2DY, UK
Phone: +44 1279 635533
Fax: +44 1279 635262
e-mail: sales@jumo.co.uk
Internet: www.jumo.co.uk

JUMO Process Control, Inc.
8 Technology Boulevard
Canastota, NY 13032, USA
Phone: 315-697-JUMO
1-800-554-JUMO
Fax: 315-697-5867
e-mail: info@jumo.us
Internet: www.jumo.us

Wiring diagrams

Indoor version

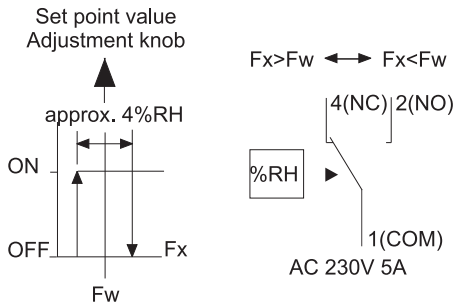

Fx: Actual value of the rel. humidity
Fw: Set point value for the rel. humidity set on the adjustment knob

If the rel. humidity Fx (actual value) goes below the set Set point value Fw, opens contact 1/4 and closes contact 1/2.

Duct version

... with one change-over contact

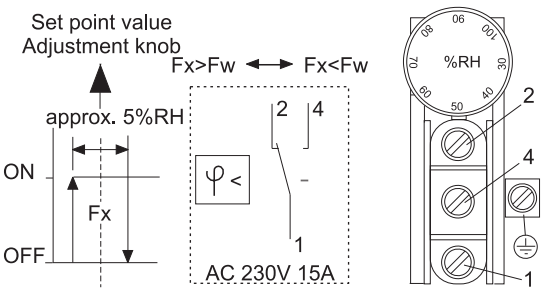

Fx: Actual value of the rel. humidity
Fw: Set point value for the rel. humidity set on the adjustment knob

If the rel. humidity Fx (actual value) goes below the set Set point value Fw, opens contact 1/4 and closes contact 1/2.

... with two change-over contacts

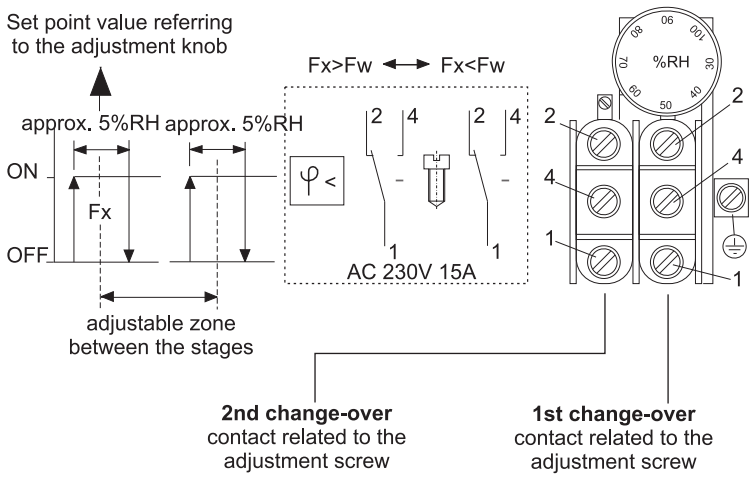

Setting the 2nd set point value

The duct version 907032/20-203/000 is factory-set such that the second set point value exceeds the first set point value by 6 % rel. humidity.

The neutral zone (gap between the first and second set point value) can be set by means of a screwdriver once the case lid is removed.

When turning counter-clockwise, the second switching point can be increased between 0 and 15 % rel. humidity (in relation to the first set point value).

The neutral zone can be determined by turning the rotary knob.

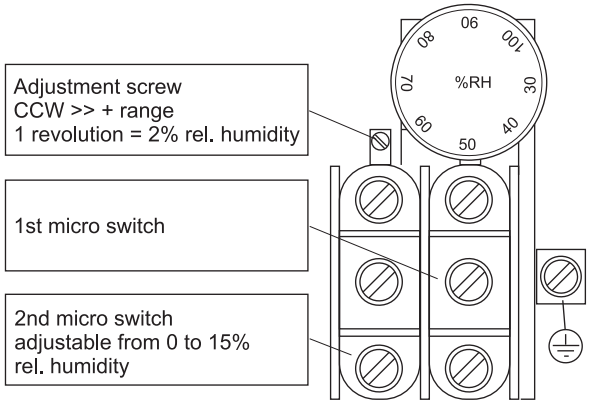

JUMO GmbH & Co. KG
Delivery address: Mackenrodtstraße 14, 36039 Fulda, Germany
Postal address: 36035 Fulda, Germany
Phone: +49 661 6003-0
Fax: +49 661 6003-607
e-mail: mail@jumo.net
Internet: www.jumo.net

JUMO Instrument Co. Ltd.
JUMO House
Temple Bank, Riverway
Harlow, Essex CM20 2DY, UK
Phone: +44 1279 635533
Fax: +44 1279 635262
e-mail: sales@jumo.co.uk
Internet: www.jumo.co.uk

JUMO Process Control, Inc.
8 Technology Boulevard
Canastota, NY 13032, USA
Phone: 315-697-JUMO
1-800-554-JUMO
Fax: 315-697-5867
e-mail: info@jumo.us
Internet: www.jumo.us

Order details

			(1) Basic type
		907032/10	Hygrostat indoor version
		907032/20	Hygrostat duct version
			(2) Output, micro switch
x		201	1x change-over contact (silver) AC 250 V/5 A
	x	202	1x change-over contact (silver) AC 250 V/15 A
	x	203	2x change-over contacts (silver) (switching gap to the first contact 0 to 15 % rel. humidity)
x		204	1x change-over contact (gold) AC 48 V/1 to 100 mA
			(3) Extra codes
x	x	000	no
x	x	928	with covered set point value setter (internal)

	(1)		(2)		(3)
Order code		-		/	
Order example	907032/10	-	201	/	000

Accessories

Article	Part No.
Stand (black plastic) for duct version	60/60171300
Sheath as sun and rain protection (outdoor mounting) for duct version	90/00321186
Sheath as wind protection (indoor and outdoor mounting) for duct version	90/00323439
PTFE filter tube (2-sectional) for extreme application conditions for duct version	90/00491789
Oval fastening flange (hot-dip galvanized steel) for duct version	60/60677200
Humidity probe check 33 % rel. humidity (magnesium chloride) for duct version	90/00332758
Humidity probe check 53 % rel. humidity (magnesium nitrate) for duct version	90/00332759
Humidity probe check 76 % rel. humidity (sodium chloride) for duct version	90/00332760

Stock versions

Order code	Part No.
907032/10-201/000	90/00556970
907032/10-201/928	90/00556971
907032/20-202/000	90/00556972

JUMO GmbH & Co. KG
Delivery address: Mackenrodtstraße 14, 36039 Fulda, Germany
Postal address: 36035 Fulda, Germany
Phone: +49 661 6003-0
Fax: +49 661 6003-607
E-mail: mail@jumo.net
Internet: www.jumo.net

JUMO Instrument Co. Ltd.
JUMO House
Temple Bank, Riverway
Harlow, Essex CM20 2DY, UK
Phone: +44 1279 635533
Fax: +44 1279 635262
E-mail: sales@jumo.co.uk
Internet: www.jumo.co.uk

JUMO Process Control, Inc.
8 Technology Boulevard
Canastota, NY 13032, USA
Phone: 315-697-5866
1-800-554-JUMO
Fax: 315-697-5867
E-mail: info@jumo.us
Internet: www.jumo.us

Screw-in and weld-in pockets

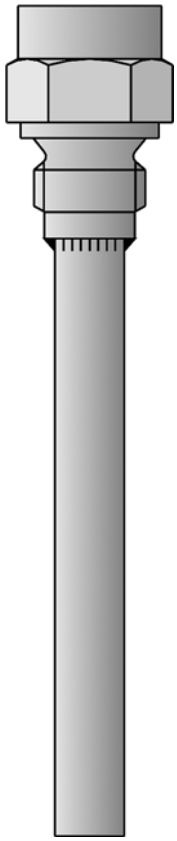

- **for thermocouples and RTD temperature probes**
- **thermometers can be replaced without draining the system**
- **pockets in different materials**
- **operating pressure up to 450 bar**
- **available with acceptance certificate 3.1 (machined from solid)**

Screw-in and weld-in pockets are used for installing thermocouples and RTD temperature probes whenever replacement without draining the system and/or pressure resistance are required.

The dimensions specified for **EL** refer to the fitting lengths of the thermometers; the dimension **L** indicates the fitting length of the pocket.

The pressure resistance is dependent on the temperature and is specified for each item. The maximum pressure that can be sealed on the thread depends on the installation conditions and may be lower. The pressure specifications contain no safety margin for additional loading through flow velocity.
Calculations of the permitted pressure under given conditions of flow, temperature and medium can be provided as a service to the user.

Acceptance test certificate:
3.1, can be requested when ordering.

Further sheaths, data sheet 902440

Technical data

Process connection	for screwing in: G 1/2 (1/2" pipe), G 3/4 (3/4" pipe) for welding in: dia. 24H7, dia. 30H11
Sheath	Material: steel 1.0305 stainless steel 1.4571 steel 1.7335 others on request
Operating temperature range	up to 450 °C, take note of loading diagrams!

JUMO GmbH & Co. KG
Delivery address: Mackenrodtstraße 14, 36039 Fulda, Germany
Postal address: 36035 Fulda, Germany
Phone: +49 661 6003-0
Fax: +49 661 6003-607
E-mail: mail@jumo.net
Internet: www.jumo.net

JUMO Instrument Co. Ltd.
JUMO House
Temple Bank, Riverway
Harlow, Essex CM20 2DY, UK
Phone: +44 1279 635533
Fax: +44 1279 635262
E-mail: sales@jumo.co.uk
Internet: www.jumo.co.uk

JUMO Process Control, Inc.
8 Technology Boulevard
Canastota, NY 13032, USA
Phone: 315-697-5866
1-800-554-JUMO
Fax: 315-697-5867
E-mail: info@jumo.us
Internet: www.jumo.us

Dimensions

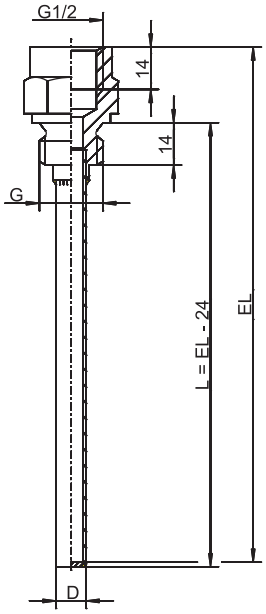

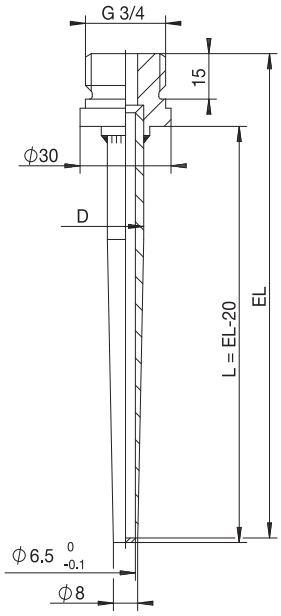

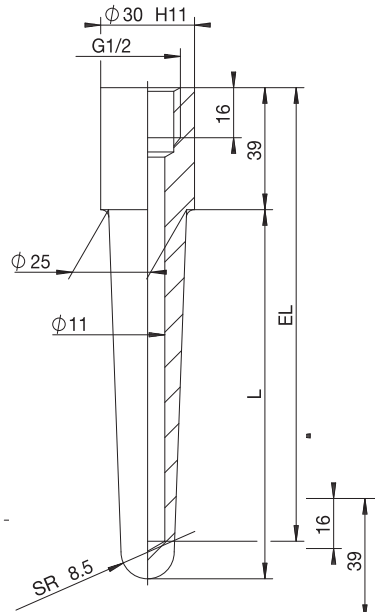

Basic type 909710/10
Basic type 909710/11

Basic type 909712/15

Basic type 909712/20

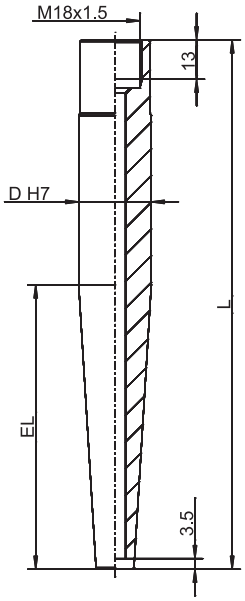

Basic type 909712/50
Basic type 909712/51

JUMO GmbH & Co. KG
Delivery address: Mackenrodtstraße 14, 36039 Fulda, Germany
Postal address: 36035 Fulda, Germany
Phone: +49 661 6003-0
Fax: +49 661 6003-607
E-mail: mail@jumo.net
Internet: www.jumo.net

JUMO Instrument Co. Ltd.
JUMO House
Temple Bank, Riverway
Harlow, Essex CM20 2DY, UK
Phone: +44 1279 635533
Fax: +44 1279 635262
E-mail: sales@jumo.co.uk
Internet: www.jumo.co.uk

JUMO Process Control, Inc.
8 Technology Boulevard
Canastota, NY 13032, USA
Phone: 315-697-5866
1-800-554-JUMO
Fax: 315-697-5867
E-mail: info@jumo.us
Internet: www.jumo.us

Loading diagrams

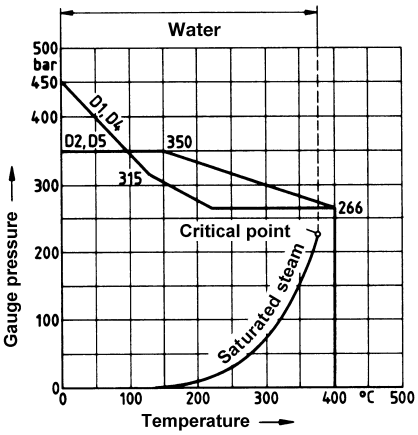

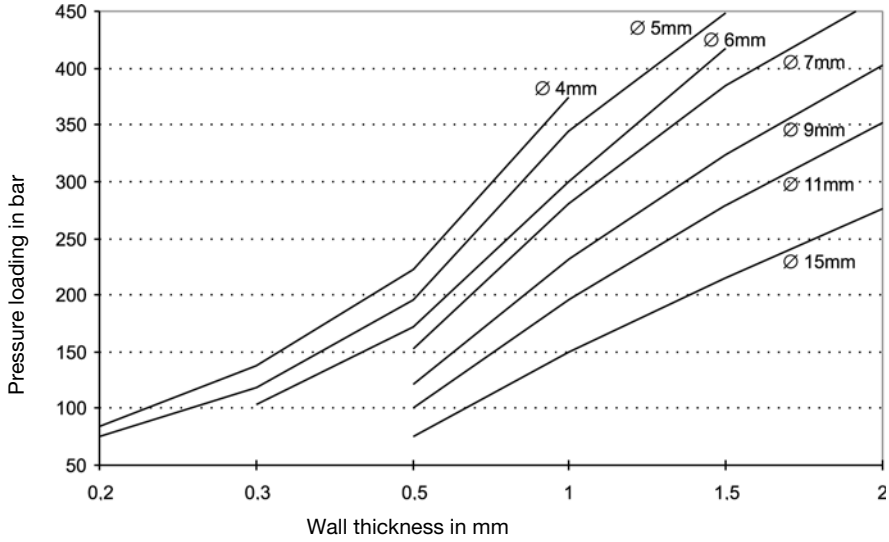

Loading of sheaths
Form D according to 43763
Basic type 909712/50 and /51

Sheath: st. steel X6 CrNiMoTi 17 12 2,
Material Ref. 1.4571

Sheaths D1 and D4:
Permissible flow velocity for
air, water, superhtd. steam: up to 60 m/sec

Sheaths D2 and D5:
Permissible flow velocity
for air: up to 60 m/sec
for water, superheated steam: up to 30 m/sec

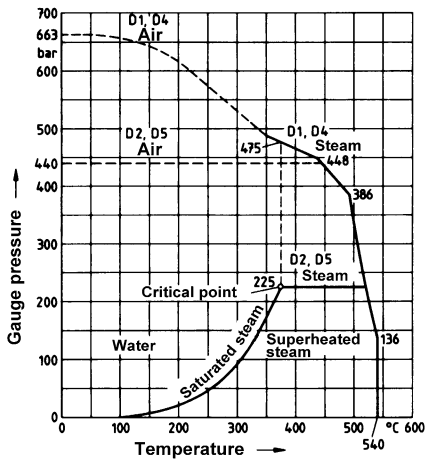

Loading on sheaths
Form D according to 43763
Basic type 909712/50 and /51

Sheath: steel 13 CrMo 44,
Material Ref. 1.7335

Permissible flow velocity for
air and superheated steam: up to 60 m/sec

Loading in water: up to 450 bar
and up to 5 m/sec

Load limits on sheaths, for various sheath dimensions

The diagram shows the load limits (guide values) for different sheath dimensions. The maximum pressure loading of cylindrical sheaths is shown in relation to the wall thickness with different sheath diameters. The data refer to sheaths in stainless steel 1.4571, fitting length 100 mm, flow velocity 10 m/sec in air or 4 m/sec in water and a temperature range from -20 to +100 °C. A safety factor of 1.8 has been taken into account. For higher temperatures, or different materials, the maximum pressure loading has to be reduced by the percentage values given in the table.

Material	Temperature	Reduction
CrNi 1.4571	up to +200 °C	-10 %
CrNi 1.4571	up to +300 °C	-20 %
CrNi 1.4571	up to +400 °C	-25 %
CrNi 1.4571	up to +500 °C	-30 %
CuZn 2.0401	up to +100 °C	-15 %
CuZn 2.0401	up to +175 °C	-60 %

JUMO GmbH & Co. KG
Delivery address: Mackenrodtstraße 14, 36039 Fulda, Germany
Postal address: 36035 Fulda, Germany
Phone: +49 661 6003-0
Fax: +49 661 6003-607
E-mail: mail@jumo.net
Internet: www.jumo.net

JUMO Instrument Co. Ltd.
JUMO House
Temple Bank, Riverway
Harlow, Essex CM20 2DY, UK
Phone: +44 1279 635533
Fax: +44 1279 635262
E-mail: sales@jumo.co.uk
Internet: www.jumo.co.uk

JUMO Process Control, Inc.
8 Technology Boulevard
Canastota, NY 13032, USA
Phone: 315-697-5866
1-800-554-JUMO
Fax: 315-697-5867
E-mail: info@jumo.us
Internet: www.jumo.us

Order details: Screw-in pockets

			(1)	**Basic type**
		909710/10		Screw-in pocket, cylindrical, with female thread G 1/2 (1/2" pipe) (similar according to 16179 Form D)
		909710/11		Screw-in pocket, cylindrical, with female thread G 1/2 (1/2" pipe) (DIN 16179 Form D)
			(2)	**Operating temperature in °C (also see loading diagram)**
x	x	848		0 to 400 °C
			(3)	**Sheath diameter D in mm**
x		8		outside diameter 8 mm/inside diameter 6.2 mm
	x	13		outside diameter 13 mm/inside diameter 11 mm
			(4)	**Fitting length EL in mm**
x	x	100		100 mm
x		150		150 mm
	x	160		160 mm
x	x	250		250 mm
			(5)	**Process connection**
x	x	104		screw fitting G 1/2 (1/2" pipe thread)
			(6)	**Sheath material**
x	x	26		stainless steel 1.4571 (max. 400 °C)
			(7)	**Extra codes**
x	x	000		none

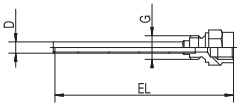

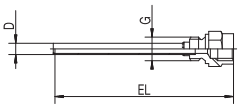

	(1)	-	(2)	-	(3)	-	(4)	-	(5)	-	(6)	/	(7)
Order code		-		-		-		-		-		/	
Order example	909710/10	-	848	-	8	-	100	-	104	-	26	/	000

JUMO GmbH & Co. KG
Delivery address: Mackenrodtstraße 14, 36039 Fulda, Germany
Postal address: 36035 Fulda, Germany
Phone: +49 661 6003-0
Fax: +49 661 6003-607
E-mail: mail@jumo.net
Internet: www.jumo.net

JUMO Instrument Co. Ltd.
JUMO House
Temple Bank, Riverway
Harlow, Essex CM20 2DY, UK
Phone: +44 1279 635533
Fax: +44 1279 635262
E-mail: sales@jumo.co.uk
Internet: www.jumo.co.uk

JUMO Process Control, Inc.
8 Technology Boulevard
Canastota, NY 13032, USA
Phone: 315-697-5866
1-800-554-JUMO
Fax: 315-697-5867
E-mail: info@jumo.us
Internet: www.jumo.us

Order details: Weld-in pockets

					(1)	**Basic type**
				909712/15		Weld-in pocket, tapered, with male thread G 3/4 (3/4" pipe) and acceptance test certificate 3.1 material
				909712/20		Weld-in pocket, tapered, with female thread G 1/2 (1/2" pipe) (DIN 16179 Form S)
				909712/50		Weld-in pocket, with female thread M 18x1.5 (DIN 43763 Form D1/D2)
				909712/51		Weld-in pocket, with female thread M 18x1.5 (DIN 43763 Form D4/D5)
					(2)	**Operating temperature in °C (also see loading diagram)**
x	x	x	x	848		0 to 400 °C
	x	x	x	854		0 to 500 °C
					(3)	**Sheath diameter D in mm**
x				12		outside diameter 12 mm stepped down to 8 mm/inside diameter 6.5 mm
		x	x	24		outside diameter 24 mm stepped down to 12.5 mm/inside diameter 7 mm
	x			25		outside diameter 25 mm stepped down to 17 mm/inside diameter 11 mm
					(4)	**Fitting length EL in mm**
		x		65 (140)		65 mm (L = 140 mm)[1] (Form D1)
			x	65 (200)		65 mm (L = 200 mm) (Form D4)
x				100		100 mm
		x		1235 (200)		125 mm (L = 200 mm) (Form D2)
			x	125 (260)		125 mm (L = 260 mm) (Form D5)
x	x			160		160 mm
x				190		190 mm
x				220		220 mm
	x			250		250 mm
					(5)	**Process connection**
x	x	x	x	000		weld-in pocket
					(6)	**Sheath material**
x				03		steel 1.0305
	x	x	x	26		stainless steel 1.4571 (max. 400 °C)
	x	x	x	36		steel 1.7335 (max. 500 °C)
					(7)	**Extra codes**
	x	x	x	000		none
	x	x	x	374		acceptance test certificate 3.1 material

	(1)		(2)		(3)		(4)		(5)		(6)		(7)
Order code		-		-		-		-		-		/	
Order example	909712/15	-	848	-	12	-	100	-	000	-	03	/	374

[1] Example: 65 mm (L = 140 mm); 65 mm = EL taper, 140 mm = L pocket.

JUMO GmbH & Co. KG
Delivery address: Mackenrodtstraße 14, 36039 Fulda, Germany
Postal address: 36035 Fulda, Germany
Phone: +49 661 6003-0
Fax: +49 661 6003-607
E-mail: mail@jumo.net
Internet: www.jumo.net

JUMO Instrument Co. Ltd.
JUMO House
Temple Bank, Riverway
Harlow, Essex CM20 2DY, UK
Phone: +44 1279 635533
Fax: +44 1279 635262
E-mail: sales@jumo.co.uk
Internet: www.jumo.co.uk

JUMO Process Control, Inc.
8 Technology Boulevard
Canastota, NY 13032, USA
Phone: 315-697-5866
1-800-554-JUMO
Fax: 315-697-5867
E-mail: info@jumo.us
Internet: www.jumo.us

Stock versions

(1)		(2)		(3)		(4)		(5)		(6)		(7)	Part No.
909710/10	-	848	-	8	-	100	-	104	-	26	/	000	90/00489140
909710/10	-	848	-	8	-	150	-	104	-	26	/	000	90/00489141
909710/10	-	848	-	8	-	250	-	104	-	26	/	000	90/00531795
909710/11	-	848	-	13	-	100	-	104	-	26	/	000	90/00044862
909710/11	-	848	-	13	-	160	-	104	-	26	/	000	90/00044863
909710/11	-	848	-	13	-	250	-	104	-	26	/	000	90/00044864
909712/15	-	848	-	12	-	100	-	000	-	03	/	000	90/00039349
909712/15	-	848	-	12	-	160	-	000	-	03	/	000	90/00032010
909712/15	-	848	-	12	-	190	-	000	-	03	/	000	90/00038739
909712/15	-	848	-	12	-	220	-	000	-	03	/	000	90/00035520
909712/20	-	848	-	25	-	160	-	000	-	26	/	000	90/00045048
909712/20	-	848	-	25	-	250	-	000	-	26	/	000	90/00045049
909712/20	-	854	-	25	-	160	-	000	-	36	/	000	90/00045411
909712/20	-	854	-	25	-	250	-	000	-	36	/	000	90/00045412
909712/50	-	848	-	24	-	65 (140)	-	000	-	26	/	000	90/00348538
909712/50	-	848	-	24	-	125 (200)	-	000	-	26	/	000	90/00340509
909712/51	-	848	-	24	-	65 (200)	-	000	-	26	/	000	90/00340384
909712/51	-	848	-	24	-	125 (260)	-	000	-	26	/	000	90/00348540
909712/50	-	854	-	24	-	65 (140)	-	000	-	36	/	000	90/00348539
909712/50	-	854	-	24	-	125 (200)	-	000	-	36	/	000	90/00317838
909712/51	-	854	-	24	-	65 (200)	-	000	-	36	/	000	90/00102673
909712/51	-	854	-	24	-	125 (260)	-	000	-	36	/	000	90/00340381

JUMO GmbH & Co. KG
Delivery address: Mackenrodtstraße 14
36039 Fulda, Germany
Postal address: 36035 Fulda, Germany
Phone: +49 661 6003-0
Fax: +49 661 6003-607
E-mail: mail@jumo.net
Internet: www.jumo.net

JUMO Instrument Co. Ltd.
JUMO House
Temple Bank, Riverway
Harlow, Essex CM20 2DY, UK
Phone: +44 1279 635533
Fax: +44 1279 635262
E-mail: sales@jumo.co.uk
Internet: www.jumo.co.uk

JUMO Process Control, Inc.
6733 Myers Road
East Syracuse, NY 13057, USA
Phone: 315-437-5866
1-800-554-5866
Fax: 315-437-5860
E-mail: info.us@jumo.net
Internet: www.jumousa.com

Terminal heads and blocks

- **For thermocouples and RTD temperature probes**
- **Terminal heads in different materials**
- **Protection IP54 and IP65**
- **Versions for lead sealing**

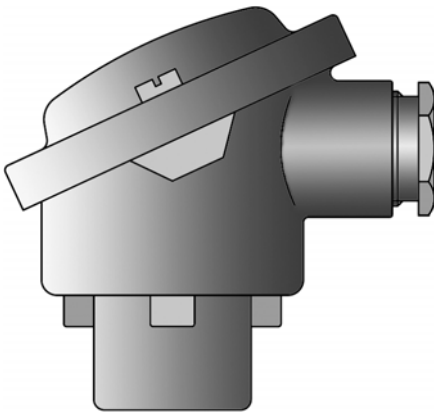

Terminal heads (pages 1 to 4)
DIN EN 50446 specifies the terminal head forms A and B, which differ in size and also slightly in shape. The nominal diameter of the bore to take the protection tube is 22 mm or 32 mm for Form A, and 15 mm or thread M24 × 1.5 for Form B.
Either aluminium or plastic is used according to the application. Terminal head form B as per DIN is more widely used. The additional forms J, BBK, BUZ and BUZH are derived from the DIN form to meet particular requirements. These forms are suitable for installing a 2-wire transmitter.

Terminal blocks (page 5)
Suitable terminal blocks with two, four or six connections are available for the different terminal heads.

Note: please state part no. as per price sheet 909715 when ordering!

Terminal heads to DIN EN 50446, Form A IP54 protection

Diameter D in mm	Temperature in °C	Part no.
Terminal head Form A 22 aluminium die-casting		
22.8	-40 to +100	00387685 ●
Terminal head Form A 32		
32.5	-40 to +100	00387688 ●

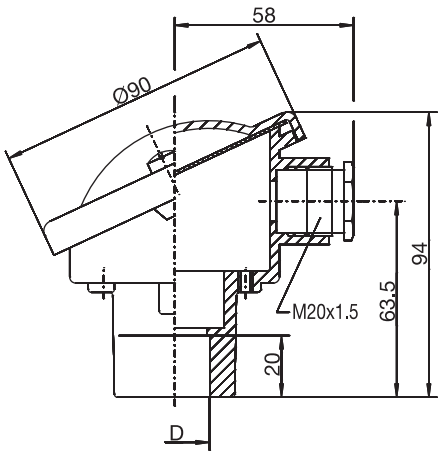

Note: versions up to 200 °C on request

● available from stock

Item 1

JUMO GmbH & Co. KG
Delivery address: Mackenrodtstraße 14
36039 Fulda, Germany
Postal address: 36035 Fulda, Germany
Phone: +49 661 6003-0
Fax: +49 661 6003-607
E-mail: mail@jumo.net
Internet: www.jumo.net

JUMO Instrument Co. Ltd.
JUMO House
Temple Bank, Riverway
Harlow, Essex CM20 2DY, UK
Phone: +44 1279 635533
Fax: +44 1279 635262
E-mail: sales@jumo.co.uk
Internet: www.jumo.co.uk

JUMO Process Control, Inc.
6733 Myers Road
East Syracuse, NY 13057, USA
Phone: 315-437-5866
1-800-554-5866
Fax: 315-437-5860
E-mail: info.us@jumo.net
Internet: www.jumousa.com

Terminal heads to DIN EN 50446, Form B IP65 protection

Diameter D	Temperature in °C	Part no.
Terminal head Form B 15 aluminium die-casting		
15.8	-40 to +100	00387712 ●
Terminal head Form B M24 × 1.5		
M24 × 1.5	-40 to +100	00387711 ●

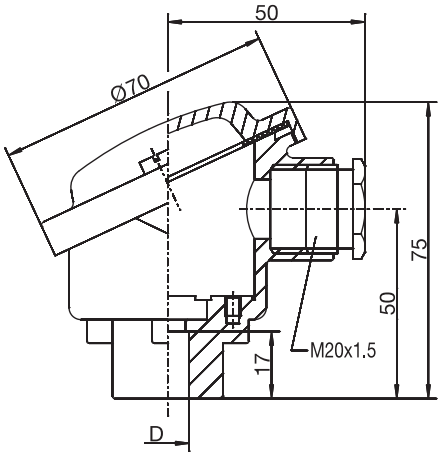

Note: versions up to 200 °C on request

● available from stock

Item 2

Terminal head similar to DIN EN 50446, Form B IP65 protection

Diameter D	Temperature in °C	Part no.
Terminal head Form BUZ M24 × 1.5 aluminium die-casting		
M24 × 1.5	-40 to +100	00387706 ●

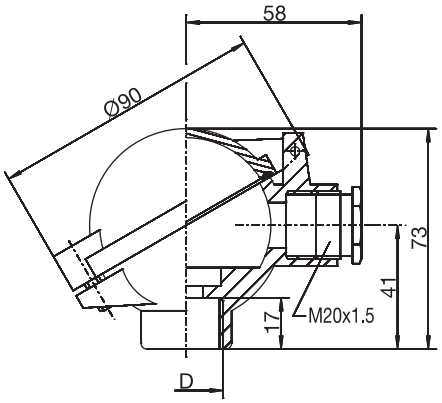

● available from stock

Item 3

JUMO GmbH & Co. KG
Delivery address: Mackenrodtstraße 14
36039 Fulda, Germany
Postal address: 36035 Fulda, Germany
Phone: +49 661 6003-0
Fax: +49 661 6003-607
E-mail: mail@jumo.net
Internet: www.jumo.net

JUMO Instrument Co. Ltd.
JUMO House
Temple Bank, Riverway
Harlow, Essex CM20 2DY, UK
Phone: +44 1279 635533
Fax: +44 1279 635262
E-mail: sales@jumo.co.uk
Internet: www.jumo.co.uk

JUMO Process Control, Inc.
6733 Myers Road
East Syracuse, NY 13057, USA
Phone: 315-437-5866
1-800-554-5866
Fax: 315-437-5860
E-mail: info.us@jumo.net
Internet: www.jumousa.com

Terminal head suitable for lead sealing, JUMO version, Form J IP65 protection

Diameter D	D1	Temperature in °C	Part no.
Terminal head Form J aluminium die-casting			
32	M12 × 1	-40 to +100	00460595 ●

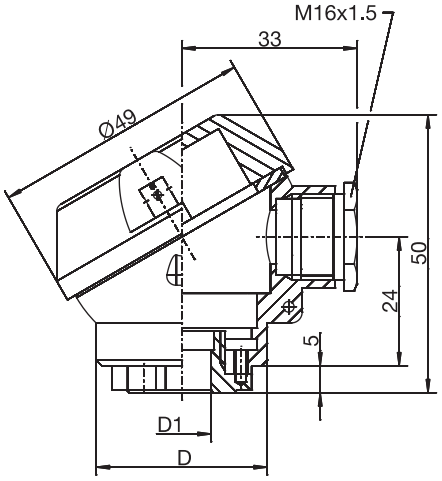

Note: versions up to 200 °C on request

● available from stock

Item 4

Terminal head similar to DIN EN 50446, Form B IP65 protection

Diameter D	Temperature in °C	Part no.
Terminal head Form BBK M24 × 1.5 PPO plastic		
M24 × 1.5	-30 to +130	00387689 ●

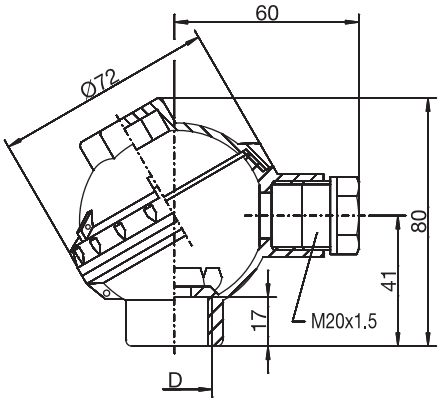

● available from stock

Item 5

JUMO GmbH & Co. KG
Delivery address: Mackenrodtstraße 14
36039 Fulda, Germany
Postal address: 36035 Fulda, Germany
Phone: +49 661 6003-0
Fax: +49 661 6003-607
E-mail: mail@jumo.net
Internet: www.jumo.net

JUMO Instrument Co. Ltd.
JUMO House
Temple Bank, Riverway
Harlow, Essex CM20 2DY, UK
Phone: +44 1279 635533
Fax: +44 1279 635262
E-mail: sales@jumo.co.uk
Internet: www.jumo.co.uk

JUMO Process Control, Inc.
6733 Myers Road
East Syracuse, NY 13057, USA
Phone: 315-437-5866
1-800-554-5866
Fax: 315-437-5860
E-mail: info.us@jumo.net
Internet: www.jumousa.com

Terminal head, Form BUZH
IP65 protection

Diameter D	Temperature in °C	Part no.
Terminal head Form BUZH aluminium die-casting with screw cover		
M24 × 1.5	-40 to +100	00387717 ●

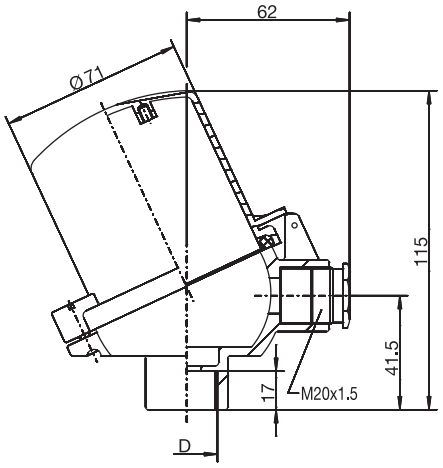

● available from stock

Item 6

Terminal blocks with screws and seal for terminal heads Form A

	Number of terminals	Thermocouple	Part no.
Terminal blocks for thermocouples			
	2	base metal	00014391 ●
	4	base metal	00017043 ●
	4	noble metal	00020749 ●

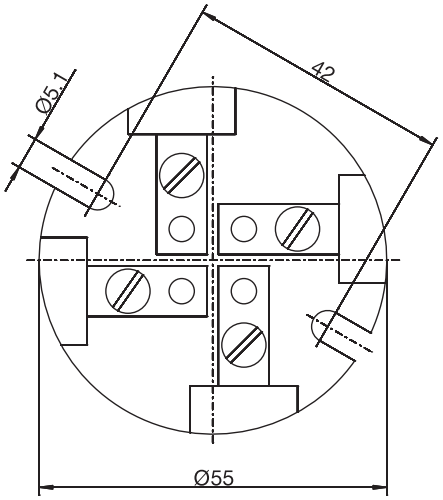

● available from stock

Item 7

JUMO GmbH & Co. KG
Delivery address: Mackenrodtstraße 14
36039 Fulda, Germany
Postal address: 36035 Fulda, Germany
Phone: +49 661 6003-0
Fax: +49 661 6003-607
E-mail: mail@jumo.net
Internet: www.jumo.net

JUMO Instrument Co. Ltd.
JUMO House
Temple Bank, Riverway
Harlow, Essex CM20 2DY, UK
Phone: +44 1279 635533
Fax: +44 1279 635262
E-mail: sales@jumo.co.uk
Internet: www.jumo.co.uk

JUMO Process Control, Inc.
6733 Myers Road
East Syracuse, NY 13057, USA
Phone: 315-437-5866
1-800-554-5866
Fax: 315-437-5860
E-mail: info.us@jumo.net
Internet: www.jumousa.com

Terminal blocks for terminal heads Form B, BBK, BUZ and BUZH

Number of terminals	Part no.
Terminal block for thermocouples	
2	00015899 ●
4	00021673 ●
6	00015901 ●
Terminal block for RTD temperature probes	
2	00015888 ●
4	00015900 ●
6	00047370 ●

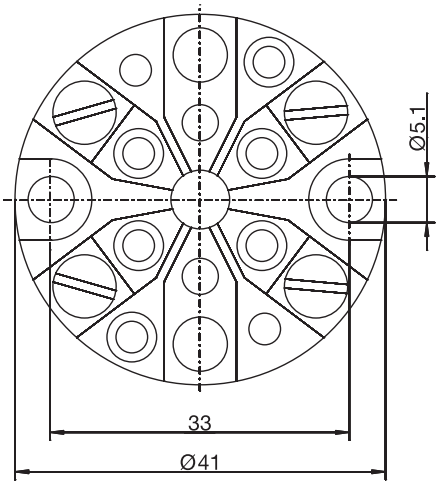

Note: screws and seals on request

● available from stock

Item 8

Terminal blocks for terminal heads Form J (Type of fastening: engaging)

Number of terminals	Part no.
Terminal blocks for thermocouples and RTD temperature probes	
2	00470579 ●
4	00470578 ●

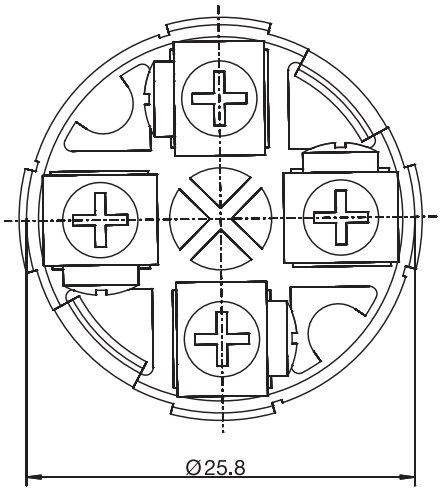

Note: screws and seals on request

● available from stock

Item 9

JUMO GmbH & Co. KG
Delivery address: Mackenrodtstraße 14, 36039 Fulda, Germany
Postal address: 36035 Fulda, Germany
Phone: +49 661 6003-0
Fax: +49 661 6003-607
E-mail: mail@jumo.net
Internet: www.jumo.net

JUMO Instrument Co. Ltd.
JUMO House
Temple Bank, Riverway
Harlow - Essex CM20 2DY, UK
Phone: +44 1279 63 55 33
Fax: +44 1279 63 52 62
E-mail: sales@jumo.co.uk
Internet: www.jumo.co.uk

JUMO Process Control, Inc.
8 Technology Boulevard
Canastota, NY 13032, USA
Phone: 315-697-JUMO
1-800-554-JUMO
Fax: 315-697-5867
E-mail: info@jumo.us
Internet: www.jumo.us

Compensating and connecting cables

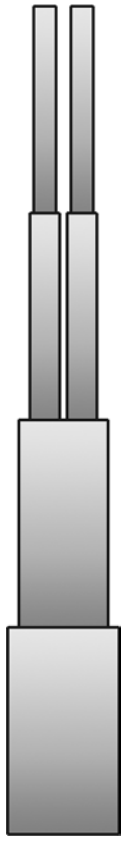

- **compensating cables to EN 60584 and DIN 43714**
- **versions from -190 to +400 °C**
- **sheath in PTFE, silicone, PVC or fiberglass**
- **for single and twin thermocouples**

Compensating cables (pages 1 to 3)
When measuring temperature with thermocouples, the cold junction temperature has to be measured in addition to the thermal voltage. The cold junction temperature is acquired to the terminals of the evaluation electronics. Since this may not necessarily be identical with the temperature inside the terminal head, the thermocouple has to be extended by means of a compensating cable (no compensating cable is necessary for thermocouples type B).
Up to 200 °C, compensating cables have the same thermoelectric properties as the thermocouples themselves.
Connecting cables (pages 4 to 8)
Connecting cables with stranded copper conductors transmit the signals from resistance thermometers or transmitters, humidity sensors, and from transducers with a standard signal, to measurement, control and recording devices.
Their construction depends on the local conditions (temperature, humidity and mechanical stress).

Note: Please state sales no. as per price sheet 90.9735 when ordering!

Compensating cables for dry areas temperature range: -20 to +350 °C

Cross-section in mm²	Diameter in mm	Color coding/ Class	Ω/m per thermocouple	Part no.	
Thermocouple Fe-Con L					
2x 0.22	3.5	DIN 43714	2.50	00006479	●[2]
2x 0.50	4.3	DIN 43714	1.25	00017856	●[1]
4x 0.22	3.5	DIN 43714	2.50	00017857	●[2]
Thermocouple Fe-Con J					
2x 0.22	3.5	EN 60584/Cl. 1	2.50	00341902	●[1]
2x 0.50	4.7	EN 60584/Cl. 1	1.25	00341903	●[1]
Thermocouple NiCr-Ni K					
2x 0.50	4.0	EN 60584/Cl. 2	2.00	00017858	●[1]
4x 0.50	3.4	EN 60584/Cl. 2	2.00	00017860	●[2]
Thermocouple Pt10Rh-Pt S					
2x 0.50	4.7	EN 60584/Cl. 2	0.20	00017859	●[1]
4x 0.50	3.5	EN 60584/Cl. 2	0.20	00017861	●[2]

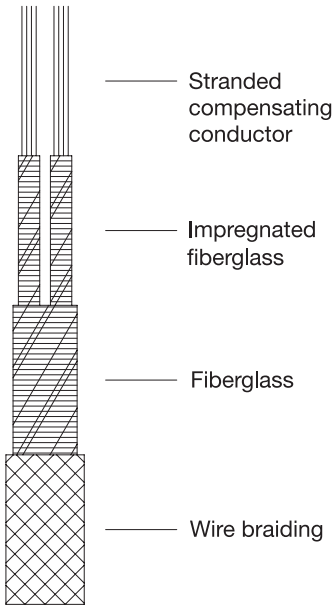

● available from stock

1. with galvanized steel braiding
2. with stainless steel braiding

Item 1

JUMO GmbH & Co. KG
Delivery address: Mackenrodtstraße 14, 36039 Fulda, Germany
Postal address: 36035 Fulda, Germany
Phone: +49 661 6003-0
Fax: +49 661 6003-607
E-mail: mail@jumo.net
Internet: www.jumo.net

JUMO Instrument Co. Ltd.
JUMO House
Temple Bank, Riverway
Harlow - Essex CM20 2DY, UK
Phone: +44 1279 63 55 33
Fax: +44 1279 63 52 62
E-mail: sales@jumo.co.uk
Internet: www.jumo.co.uk

JUMO Process Control, Inc.
8 Technology Boulevard
Canastota, NY 13032, USA
Phone: 315-697-JUMO
1-800-554-JUMO
Fax: 315-697-5867
E-mail: info@jumo.us
Internet: www.jumo.us

Compensating cables for dry and damp areas temperature range: -50 to +180 °C

Cross-section in mm²	Diameter in mm	Color coding/ Class	Ω/m per thermocouple	Part no.
Thermocouple Fe-Con L				
2x 0.50	4.7	DIN 43714	1.25	00017846 ●
4x 0.22	4.5	DIN 43714	2.50	00017848 ●
Thermocouple NiCr-Ni K				
2x 0.22	3.2	EN 60584/Cl. 2	4.50	00052898 ●
2x 0.50	4.7	EN 60584/Cl. 2	2.00	00017847 ●
4x 0.22	4.7	EN 60584/Cl. 2	4.00	00017849 ●

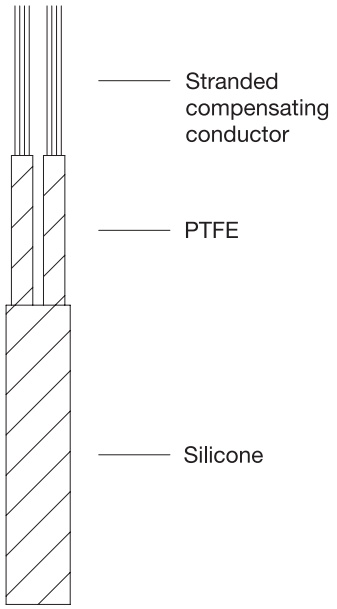

● available from stock

Item 2

Compensating cables for dry and damp areas temperature range: -50 to +180 °C

Cross-section in mm²	Diameter in mm	Color coding/ Class	Ω/m per thermocouple	Part no.
Thermocouple Fe-Con L				
2x 1.50	6.5	DIN 43714	0.42	00017853 ●
Thermocouple NiCr-Ni K				
2x 1.50	6.5	EN 60584/Cl. 2	0.70	00017854 ●
Thermocouple Pt10Rh-Pt S				
2x 1.50	6.7	EN 60584/Cl. 2	0.07	00017855 ●

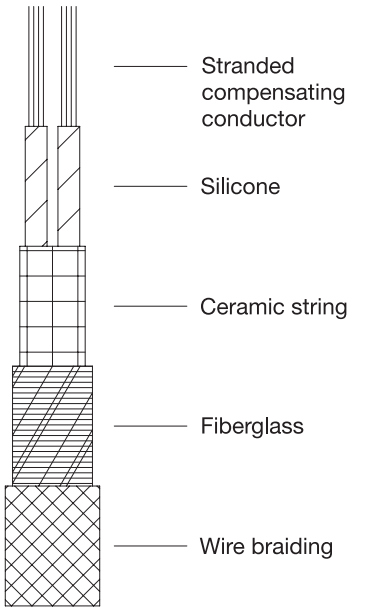

● available from stock

Item 3

JUMO GmbH & Co. KG
Delivery address: Mackenrodtstraße 14, 36039 Fulda, Germany
Postal address: 36035 Fulda, Germany
Phone: +49 661 6003-0
Fax: +49 661 6003-607
E-mail: mail@jumo.net
Internet: www.jumo.net

JUMO Instrument Co. Ltd.
JUMO House
Temple Bank, Riverway
Harlow - Essex CM20 2DY, UK
Phone: +44 1279 63 55 33
Fax: +44 1279 63 52 62
E-mail: sales@jumo.co.uk
Internet: www.jumo.co.uk

JUMO Process Control, Inc.
8 Technology Boulevard
Canastota, NY 13032, USA
Phone: 315-697-JUMO
1-800-554-JUMO
Fax: 315-697-5867
E-mail: info@jumo.us
Internet: www.jumo.us

Compensating cables for dry and damp areas temperature range: +5 to +105 °C

Cross-section in mm²	Diameter in mm	Color coding	Ω/m per thermocouple	Part no.
Thermocouple Fe-Con L				
2x 0.22	3.7	DIN 43 714	2.50	00038959 ●

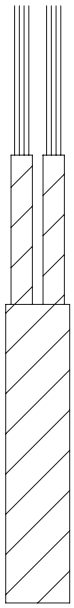

● available from stock

Item 4

Compensating cables for dry areas temperature range: -20 to +350 °C

Cross-section in mm²	Ext. dimension in mm	Color coding/ Class	Ω/m per thermocouple	Part no.
Thermocouple Fe-Con L				
2x 0.19	1.20 x 1.85	DIN 43714	3.20	00010497 ●
Thermocouple NiCr-Ni K				
2x 0.19	1.20 x 2.00	EN 60584/Cl. 2	5.20	00060294 ●

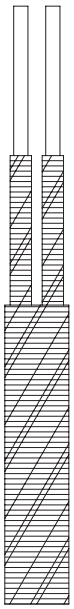

● available from stock

Item 5

JUMO GmbH & Co. KG
Delivery address: Mackenrodtstraße 14, 36039 Fulda, Germany
Postal address: 36035 Fulda, Germany
Phone: +49 661 6003-0
Fax: +49 661 6003-607
E-mail: mail@jumo.net
Internet: www.jumo.net

JUMO Instrument Co. Ltd.
JUMO House
Temple Bank, Riverway
Harlow - Essex CM20 2DY, UK
Phone: +44 1279 63 55 33
Fax: +44 1279 63 52 62
E-mail: sales@jumo.co.uk
Internet: www.jumo.co.uk

JUMO Process Control, Inc.
8 Technology Boulevard
Canastota, NY 13032, USA
Phone: 315-697-JUMO
1-800-554-JUMO
Fax: 315-697-5867
E-mail: info@jumo.us
Internet: www.jumo.us

Connecting cables (single conductor) for dry and damp areas temperature range: -190 to +260 °C

Cross-section in mm²	Diameter in mm	Ω/m per conductor	Part no.
1x 0.22	1.2	0.0869	00020778 ●

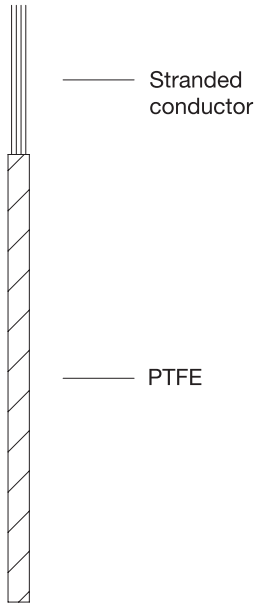

● available from stock

Item 6

Connecting cables for dry and damp areas temperature range: -50 to +260 °C

Cross-section in mm²	Diameter in mm	Ω/m per conductor	Part no.
2x 0.35	3.5	0.055	00011944 ●[2]
3x 0.35	3.5	0.055	00048074 ●[2]
4x 0.35	3.5	0.055	00006235 ●[2]
6x 0.22	4.7	0.080	00084534 ●[2]

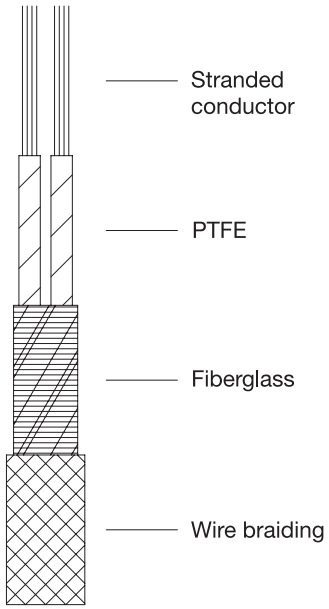

● available from stock 2. with stainless steel braiding

Item 7

JUMO GmbH & Co. KG
Delivery address: Mackenrodtstraße 14, 36039 Fulda, Germany
Postal address: 36035 Fulda, Germany
Phone: +49 661 6003-0
Fax: +49 661 6003-607
E-mail: mail@jumo.net
Internet: www.jumo.net

JUMO Instrument Co. Ltd.
JUMO House
Temple Bank, Riverway
Harlow - Essex CM20 2DY, UK
Phone: +44 1279 63 55 33
Fax: +44 1279 63 52 62
E-mail: sales@jumo.co.uk
Internet: www.jumo.co.uk

JUMO Process Control, Inc.
8 Technology Boulevard
Canastota, NY 13032, USA
Phone: 315-697-JUMO
1-800-554-JUMO
Fax: 315-697-5867
E-mail: info@jumo.us
Internet: www.jumo.us

Connecting cables for dry and damp areas temperature range: -5 to +80 °C

Cross-section in mm^2	Diameter in mm	Ω/m per conductor	Part no.
2x 0.14	3.2	0.130	00052058 ●
2x 0.34	4.7	0.060	00037564 ●
2x 0.75	5.7	0.025	00001478 ●
3x 0.34	4.7	0.060	00040122 ●
3x 0.75	6.3	0.025	00001480 ●
4x 0.14	3.7	0.130	00038186 ●
4x 0.34	4.9	0.060	00047904 ●

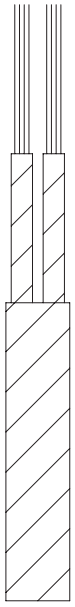

● available from stock

Item 8

Connecting cables for dry and damp areas temperature range: +5 to +105 °C

Cross-section in mm^2	Diameter in mm	Ω/m per conductor	Part no.
2x 0.25	4.3	0.070	00048228 ●
2x 0.34	5.3	0.060	00052804 ●
2x 0.75	6.4	0.025	00045951 ●

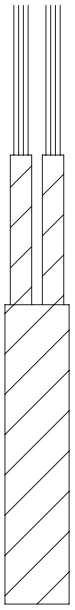

● available from stock

Item 9

JUMO GmbH & Co. KG
Delivery address: Mackenrodtstraße 14, 36039 Fulda, Germany
Postal address: 36035 Fulda, Germany
Phone: +49 661 6003-0
Fax: +49 661 6003-607
E-mail: mail@jumo.net
Internet: www.jumo.net

JUMO Instrument Co. Ltd.
JUMO House
Temple Bank, Riverway
Harlow - Essex CM20 2DY, UK
Phone: +44 1279 63 55 33
Fax: +44 1279 63 52 62
E-mail: sales@jumo.co.uk
Internet: www.jumo.co.uk

JUMO Process Control, Inc.
8 Technology Boulevard
Canastota, NY 13032, USA
Phone: 315-697-JUMO
1-800-554-JUMO
Fax: 315-697-5867
E-mail: info@jumo.us
Internet: www.jumo.us

Connecting cables for dry and damp areas temperature range: -50 to +180 °C

Cross-section in mm^2	Diameter in mm	Ω/m per conductor	Part no.
2x 0.22	4.2	0.081	00047713 ●
2x 0.34	4.6	0.060	00037101 ●
3x 0.35	4.5	0.055	00039901 ●
4x 0.14	3.8	0.130	00037843 ●
4x 0.35	4.7	0.055	00064944 ●
6x 0.14	4.6	0.130	00062432 ●
6x 0.22	6.3	0.085	00043990 ●

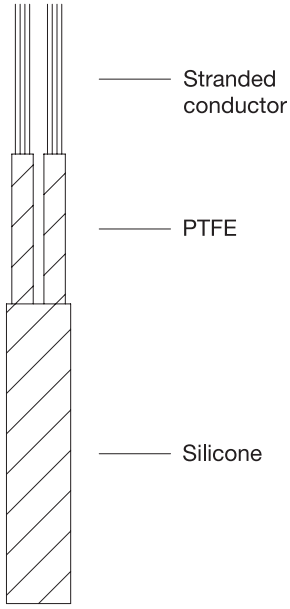

● available from stock

Item 10

Connecting cables for dry and damp areas temperature range: -50 to +180 °C

Cross-section in mm^2	Diameter in mm	Ω/m per conductor	Part no.
2x 0.75	6.2	0.025	00001487 ●
4x 0.75	7.8	0.025	00001492 ●

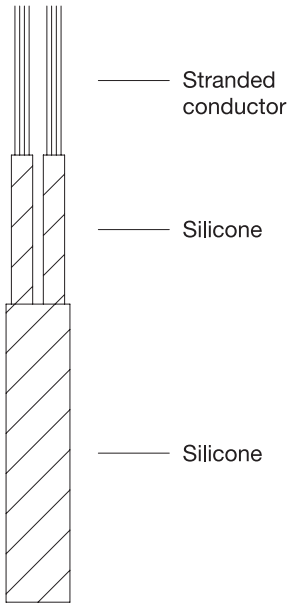

● available from stock

Item 11

JUMO GmbH & Co. KG
Delivery address: Mackenrodtstraße 14, 36039 Fulda, Germany
Postal address: 36035 Fulda, Germany
Phone: +49 661 6003-0
Fax: +49 661 6003-607
E-mail: mail@jumo.net
Internet: www.jumo.net

JUMO Instrument Co. Ltd.
JUMO House
Temple Bank, Riverway
Harlow - Essex CM20 2DY, UK
Phone: +44 1279 63 55 33
Fax: +44 1279 63 52 62
E-mail: sales@jumo.co.uk
Internet: www.jumo.co.uk

JUMO Process Control, Inc.
8 Technology Boulevard
Canastota, NY 13032, USA
Phone: 315-697-JUMO
1-800-554-JUMO
Fax: 315-697-5867
E-mail: info@jumo.us
Internet: www.jumo.us

Connecting cables for dry and damp areas temperature range: -50 to +180 °C

Cross-section in mm^2	Diameter in mm	Ω/m per conductor	Part no.	
2x 0.22	4.5	0.085	00044774	●[5]
4x 0.14	4.6	0.130	00062502	●[4]
4x 0.35	6.2	0.055	00039902	●[3]

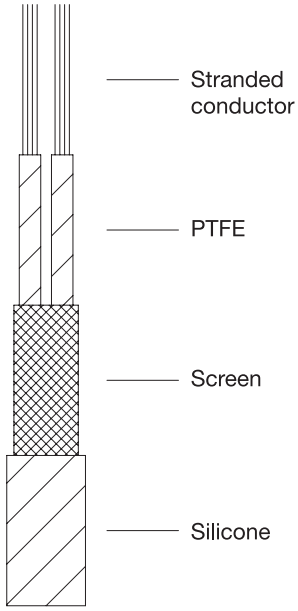

3. screen: nickel-plated copper
4. screen: silver-plated copper
5. screen: plain copper

● available from stock

Item 12

Connecting cables for dry and damp areas temperature range: -190 to +260 °C

Cross-section in mm^2	Diameter in mm	Ω/m per conductor	Part no.	
2x 0.61	4.9	0.030	00043637	●[3]
4x 0.14	3.5	0.130	00062849	●[4]
4x 0.50	4.8	0.040	00045655	●[3]
8x 0.14	4.9	0.130	00345480	●[3]

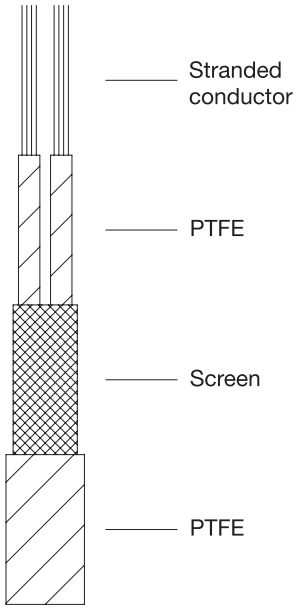

3. screen: nickel-plated copper
4. screen: silver-plated copper

● available from stock

Item 13

JUMO GmbH & Co. KG
Delivery address: Mackenrodtstraße 14, 36039 Fulda, Germany
Postal address: 36035 Fulda, Germany
Phone: +49 661 6003-0
Fax: +49 661 6003-607
E-mail: mail@jumo.net
Internet: www.jumo.net

JUMO Instrument Co. Ltd.
JUMO House
Temple Bank, Riverway
Harlow - Essex CM20 2DY, UK
Phone: +44 1279 63 55 33
Fax: +44 1279 63 52 62
E-mail: sales@jumo.co.uk
Internet: www.jumo.co.uk

JUMO Process Control, Inc.
8 Technology Boulevard
Canastota, NY 13032, USA
Phone: 315-697-JUMO
1-800-554-JUMO
Fax: 315-697-5867
E-mail: info@jumo.us
Internet: www.jumo.us

Connecting cables for dry and damp areas temperature range: -5 to +80 °C

Cross-section in mm²	Diameter in mm	Ω/m per conductor	Part no.
2x 0.14	3.7	0.130	00039272 ●[6]
2x 0.25	4.7	0.070	00048185 ●[6]
6x 0.14	4.7	0.130	00044132 ●[6]

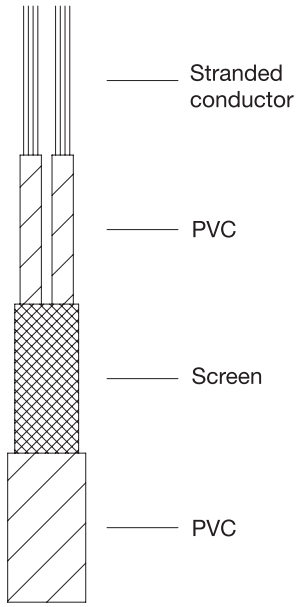

● available from stock 6. screen: tinned copper Item 14

Color coding for compensating cables and thermocables

New color coding to EN 60584					Old color coding to DIN 43714 as of June 1979		
Thermocouple	Type	Conductor color Positive limb	Conductor color Negative limb	Sheath color	Conductor color Positive limb	Conductor color Negative limb	Sheath color
Cu-Con	U[1]	red	brown	brown	red	brown	brown
Cu-Con	T	brown	white	brown	-	-	-
Fe-Con	L[1]	red	blue	blue	red	blue	blue
Fe-Con	J	black	white	black	-	-	-
NiCr-Ni	K	green	white	green	red	green	green
NiCr-Con	E	violet	white	violet	-	-	-
NiCrSi-NiSi	N	mauve	white	mauve	no details		
Pt10Rh-Pt	S	orange	white	orange	red	white	white
Pt13Rh-Pt	R	orange	white	orange	red	white	white
Pt30Rh-Pt6Rh	B	gray	white	gray	no details		

Note: sheath color can also be a colored thread.

1. for thermocouples to DIN 43710.

JUMO GmbH & Co. KG
Delivery address: Mackenrodtstraße 14, 36039 Fulda, Germany
Postal address: 36035 Fulda, Germany
Phone: +49 661 6003-0
Fax: +49 661 6003-607
E-mail: mail@jumo.net
Internet: www.jumo.net

JUMO Instrument Co. Ltd.
JUMO House
Temple Bank, Riverway
Harlow - Essex CM20 2DY, UK
Phone: +44 1279 63 55 33
Fax: +44 1279 63 52 62
E-mail: sales@jumo.co.uk
Internet: www.jumo.co.uk

JUMO Process Control, Inc.
8 Technology Boulevard
Canastota, NY 13032, USA
Phone: 315-697-JUMO
1-800-554-JUMO
Fax: 315-697-5867
E-mail: info@jumo.us
Internet: www.jumo.us

Measuring inserts for screw-in thermocouples and resistance thermometers with terminal head Form B

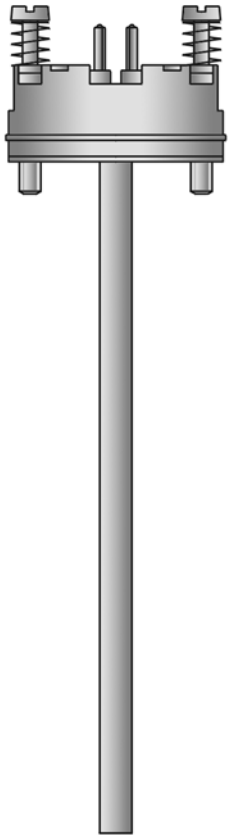

- **for temperatures from -200 to +1150 °C**
- **as single or twin insert**
- **available with transmitter**

The inserts are suitable for screw-in thermocouples according to Data Sheet 90.1020, as well as for screw-in resistance thermometers to Data Sheets 90.2020 and 90.2820.

A mineral-insulated insert has to be used for insert lengths from 800 mm.

The measuring inserts for screw-in resistance thermometers are normally fitted with a Pt100 temperature sensor to EN 60 751, Class B in 2-wire circuit. Versions with Pt500 or Pt1000 can also be supplied. There is a choice of 3-or 4-wire circuit connections.

A transmitter can optionally be used instead of the terminal block.

Technical data

Terminal block	suitable for terminal heads Form B, BBK and BUZ. Caution: reduced ambient temperatures when using a transmitter instead of the terminal block, Data Sheets 70.7030 and 70.7010
Protection tube	- stainless steel 1.4571 (for 909740/10... and 909742/30...) - stainless steel 1.4571 (rigid part) sheath st. steel 1.4541 (flexible part) (for 909740/20...) - sheath Inox 1.4541 (for 909742/40-...-.042...) - sheath Inconel 2.4816 (for 909742/40-...-.043...)
Transmitter	analog transmitter, output 4 to 20mA, for resistance thermometers, Data Sheet 70.7030 analog transmitter, output 0 to 10V, for resistance thermometers, Data Sheet 70.7030 programmable transmitter, output 4 to 20 mA/20 to 4 mA, for thermocouples or resistance thermometers, Data Sheet 70.7010
Application	insert for screw-in thermocouples / resistance thermometers according to Data Sheets 90.1020, 90.2020 and 90.2820

JUMO GmbH & Co. KG
Delivery address: Mackenrodtstraße 14, 36039 Fulda, Germany
Postal address: 36035 Fulda, Germany
Phone: +49 661 6003-0
Fax: +49 661 6003-607
E-mail: mail@jumo.net
Internet: www.jumo.net

JUMO Instrument Co. Ltd.
JUMO House
Temple Bank, Riverway
Harlow - Essex CM20 2DY, UK
Phone: +44 1279 63 55 33
Fax: +44 1279 63 52 62
E-mail: sales@jumo.co.uk
Internet: www.jumo.co.uk

JUMO Process Control, Inc.
8 Technology Boulevard
Canastota, NY 13032, USA
Phone: 315-697-JUMO
1-800-554-JUMO
Fax: 315-697-5867
E-mail: info@jumo.us
Internet: www.jumo.us

Order details: Measuring inserts for screw-in resistance thermometers with terminal head Form B

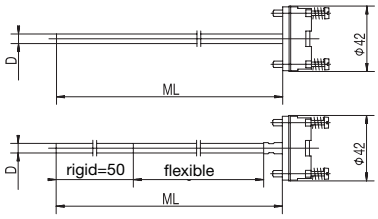

			(1) Basic version
		909740/10	Inserts to DIN 43 762 for screw-in resistance thermometers to DIN 43 765/66, Form B und C
		909740/20	Insert similar to DIN 43 762 as mineral-insulated resistance thermometer
			(2) Operating temperature in °C
	x	150	-200 to +600°C
x		402	- 50 to +400°C (standard with 909740/10)
	x	415	- 50 to +600°C (standard with 909740/20)
			(3) Measuring insert
x	x	1001	1 x Pt100 in 3-wire circuit
x	x	1003	1 x Pt100 in 2-wire circuit
x	x	1011	1 x Pt100 in 4-wire circuit
x	x	2001	2 x Pt100 in 3-wire circuit (only in conjunction with D 6mm)
x	x	2003	2 x Pt100 in 2-wire circuit
			(4) Tolerance class to EN 60 751
x	x	1	Class B (standard)
x	x	2	Class A
x	x	3	Class 1/3 DIN
			(5) Measuring insert diameter D in mm
	x	3	3mm
x	x	6	6mm
			(6) Measuring insert length ML in mm (with 909740/10 ML max. = 800mm)
x	x	315	315mm (for resistance thermometer 902020/10-...-....-.-.-160-.../...)
x	x	405	405mm (for resistance thermometer 902020/10-...-....-.-.-250-.../...)
x	x	555	555mm (for resistance thermometer 902020/10-...-....-.-.-400-.../...)
x	x	...	please specify in plain text
			(7) Extra codes
x	x	000	no extra code
x	x	330	1 x analog transmitter, output 4 to 20mA[2], Data Sheet 70.7030
x	x	331	1 x programmable transmitter, output 4 to 20mA/20 to 4mA[3], Data Sheet 70.7010
x	x	333	1 x analog transmitter, output 0 to 10V[2], Data Sheet 70.7030
x	x	337	2 x analog transmitter, output 0 to10V[2], Data Sheet 70.7030

	(1)		(2)		(3)		(4)		(5)		(6)		(7)	
Order code	[ ]	-	[ ]	-	[ ]	-	[ ]	-	[ ]	-	[ ]	/	[ ]	,...
Order example	909740/10	-	402	-	1003	-	1	-	6	-	315	/	000[1]	

1. List extra codes in sequence, separated by commas.
2. Please specify range in plain text.
3. Please specify range and output signal in plain text.

Stock version

(1)		(2)		(3)		(4)		(5)		(6)		(7)	Sales No.
909740/10	-	402	-	1003	-	1	-	6	-	315	/	000	90/00039286

JUMO GmbH & Co. KG
Delivery address: Mackenrodtstraße 14, 36039 Fulda, Germany
Postal address: 36035 Fulda, Germany
Phone: +49 661 6003-0
Fax: +49 661 6003-607
E-mail: mail@jumo.net
Internet: www.jumo.net

JUMO Instrument Co. Ltd.
JUMO House
Temple Bank, Riverway
Harlow - Essex CM20 2DY, UK
Phone: +44 1279 63 55 33
Fax: +44 1279 63 52 62
E-mail: sales@jumo.co.uk
Internet: www.jumo.co.uk

JUMO Process Control, Inc.
8 Technology Boulevard
Canastota, NY 13032, USA
Phone: 315-697-JUMO
1-800-554-JUMO
Fax: 315-697-5867
E-mail: info@jumo.us
Internet: www.jumo.us

Order details: Measuring inserts for screw-in thermocouples with terminal head Form B

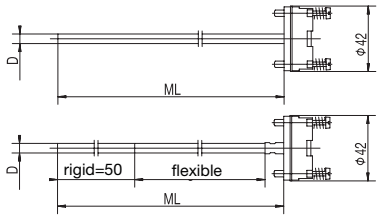

			(1) Basic version
		909742/30	Inserts for screw-in thermocouples
		909742/40	Mineral-insulated inserts for screw-in thermocouples
			(2) Operating temperature in °C
x		150	-200 to + 600°C
x		165	-200 to + 800°C
	x	182	-200 to +1150°C (only in conjunction with NiCr-Ni K)
			(3) Measuring insert
x	x	1042	1 x Fe-Con L
x	x	1043	1 x NiCr-Ni K
x	x	2042	2 x Fe-Con L
x	x	2043	2 x NiCr-Ni K
			(4) Measuring insert diameter D in mm
	x	3	3mm
x	x	6	6mm
			(5) Measuring insert length ML in mm (with 909742/30 ML max. = 800mm)
x	x	315	315mm (for thermocouple 901020/10-...-....-.-.-160-.../...)
x	x	405	405mm (for thermocouple 901020/10-...-....-.-.-250-.../...)
x	x	555	555mm (for thermocouple 901020/10-...-....-.-.-400-.../...)
x	x	...	please specify in plain text
			(6) Extra codes
x	x	000	no extra code
x	x	331	1 x programmable transmitter, output 4 to 20mA/20 to 4mA[3], Data Sheet 70.7010

	(1)		(2)		(3)		(4)		(5)		(6)
Order code	[ ]	-	[ ]	-	[ ]	-	[ ]	-	[ ]	/	[ ]
Order example	909742/30	-	150	-	1042	-	6	-	405	/	331

3. Please specify range and output signal in plain text.

JUMO GmbH & Co. KG
Delivery address: Mackenrodtstraße 14,
36039 Fulda, Germany
Postal address: 36035 Fulda, Germany
Phone: +49 661 6003-0
Fax: +49 661 6003-607
E-mail: mail@jumo.net
Internet: www.jumo.net

JUMO Instrument Co. Ltd.
JUMO House
Temple Bank, Riverway
Harlow - Essex CM20 2DY, UK
Phone: +44 1279 63 55 33
Fax: +44 1279 63 52 62
E-mail: sales@jumo.co.uk
Internet: www.jumo.co.uk

JUMO Process Control, Inc.
8 Technology Boulevard
Canastota, NY 13032, USA
Phone: 315-697-JUMO
1-800-554-JUMO
Fax: 315-697-5867
E-mail: info@jumo.us
Internet: www.jumo.us

Thermocouples to DIN 43 732

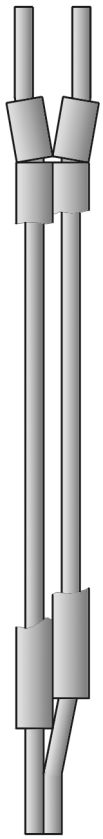

- **for temperatures up to +1600°C**
- **standardized voltage tables for thermocouples to EN 60 584, Part 1 and DIN 43 710**
- **for push-in thermocouples to DIN 43 733**

These thermocouples are intended as replacement elements for thermocouples to DIN 43 733. The thermocouples can also be used for direct temperature measurement in special applications. The maximum temperatures specified can only be taken as guide values for the limit with continuous use in air that does not contain harmful gases. The thermocouple must not be mechanically stressed during operation.

Technical data

Thermocouples	**Color coding**	
	+ (positive limb)	**- (negative limb)**
Fe-Con L	red	blue
NiCr-Ni K	green	white
Pt10Rh-Pt S	orange	white
Pt30Rh-Pt6Rh B	gray	white

JUMO GmbH & Co. KG
Delivery address: Mackenrodtstraße 14, 36039 Fulda, Germany
Postal address: 36035 Fulda, Germany
Phone: +49 661 6003-0
Fax: +49 661 6003-607
E-mail: mail@jumo.net
Internet: www.jumo.net

JUMO Instrument Co. Ltd.
JUMO House
Temple Bank, Riverway
Harlow - Essex CM20 2DY, UK
Phone: +44 1279 63 55 33
Fax: +44 1279 63 52 62
E-mail: sales@jumo.co.uk
Internet: www.jumo.co.uk

JUMO Process Control, Inc.
8 Technology Boulevard
Canastota, NY 13032, USA
Phone: 315-697-JUMO
1-800-554-JUMO
Fax: 315-697-5867
E-mail: info@jumo.us
Internet: www.jumo.us

Order details: Thermocouples to DIN 43 732

(1) Basic version

909744/10 Thermocouple to DIN 43 732, Form A

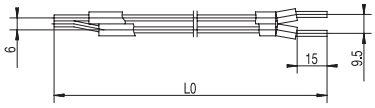

909744/20 Thermocouple to DIN 43 732, Form B

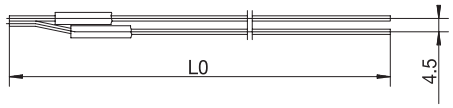

909744/30 Thermocouple to DIN 43 732, Form C

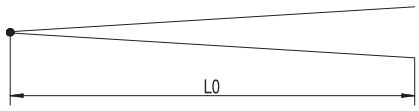

909744/40 Thermocouple to DIN 43 732, Form D

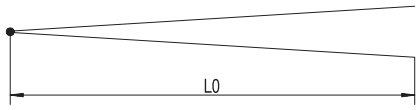

(2) Measuring insert/operating temperature in °C[2]

x	x			1042	1 x Fe-Con L, -200 to +600°C (Form B); -200 to +700°C (Form A)
x	x			1043	1 x NiCr-Ni K, -200 to +900°C (Form B); -200 to +1000°C (Form A)
		x	x	1044	1 x Pt10Rh-Pt S, -50 to +1300°C
		x		1046	1 x Pt30Rh-Pt6Rh B, -50 to +1600°C

(3) Limb diameter D in mm

			x	0.35	0.35mm
		x		0.5	0.5 mm
	x			1	1mm (only in conjunction with insert 1 x Fe-Con L)
	x			1.38	1.38 mm (only in conjunction with insert 1 x NiCr-Ni K)
x				3	3mm

(4) Overall length L0 in mm/NL[1]

							Weight in g Type S ø 0.35	Type S ø 0.5	Type B ø 0.5
	x			220	220mm	/ 180mm			
			x	240	240mm	/ 180mm	1.00g	-	-
		x		260	260mm	/ 180mm	-	2.20g	2.11g
	x			290	290mm	/ 250mm			
			x	310	310mm	/ 250mm	1.28g	-	-
		x		330	330mm	/ 250mm	-	2.78g	2.66g
	x			395	395mm	/ 355mm			
			x	415	415mm	/ 355mm	1.71g	-	-
		x		435	435mm	/ 355mm	-	3.64g	3.49g
x	x			540	540mm	/ 500mm			
			x	560	560mm	/ 500mm	2.29g	-	-
		x		580	580mm	/ 500mm	-	4.84g	4.63g
x	x			750	750mm	/ 710mm			
		x	x	790	790mm	/ 710mm	3.22g	6.57g	6.28g
x	x			1040	1040mm	/ 1000mm			
		x	x	1080	1080mm	/ 1000mm	4.39g	8.95g	8.57g
x	x			1440	1440mm	/ 1400mm			
		x	x	1480	1480mm	/ 1400mm	6.00g	12.24g	11.72g
x	x			2040	2040mm	/ 2000mm			
x	x	x	x	...	other lengths on request				

	(1)		(2)		(3)		(4)
Order code		-		-		-	
Order example	909744/10	-	1042	-	3	-	540

1. for thermocouples to DIN 43 733 with nominal length NL in mm
2. The operating temperature refers to “open” thermocouples as per data sheet.
   Higher temperatures can be achieved when they are used inside a protection tube, Data Sheets 90.1... ff.

JUMO GmbH & Co. KG
Delivery address: Mackenrodtstraße 14, 36039 Fulda, Germany
Postal address: 36035 Fulda, Germany
Phone: +49 661 6003-0
Fax: +49 661 6003-607
e-mail: mail@jumo.net
Internet: www.jumo.net

JUMO Instrument Co. Ltd.
JUMO House
Temple Bank, Riverway
Harlow, Essex CM20 2DY, UK
Phone: +44 1279 635533
Fax: +44 1279 635262
e-mail: sales@jumo.co.uk
Internet: www.jumo.co.uk

JUMO Process Control, Inc.
8 Technology Boulevard
Canastota, NY 13032, USA
Phone: 315-697-JUMO
1-800-554-JUMO
Fax: 315-697-5867
e-mail: info@jumo.us
Internet: www.jumo.us

Pipe fittings and flanges, sockets for bayonet locks

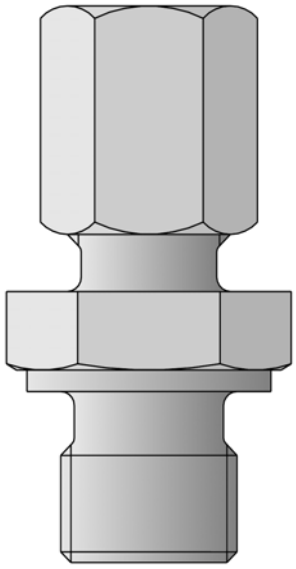

- **for temperatures up to 600 °C**
- **for different fitting lengths**
- **simple installation and replacement**
- **pressure-tight sealing**

Pipe fittings
The essential advantage of pipe fittings is the variable fitting length and the simple dismantling of the temperature probe. Versions in different materials are available, with threads that can be combined with a variety of sheath diameters. They are used for sheaths according to DIN 43763 (pipe fittings with stuffing gland) in oven construction, as well as for installing mineral-insulated RTD temperature probes and thermocouples.

Sockets for bayonet locks
The sockets are used for installing push-in RTD temperature probes / thermocouples.
They are available in the diameters 12.2, 14.5, 15.2 and 16.2 mm.

Flanges
Stop flanges can be supplied in different materials. By using a backing flange, the measurement location can be sealed up to 1 bar. They are suitable as an alternative to pipe fittings for the same applications.

Note: please state part No. according to price sheet 909750 when ordering!

Pipe fittings for sheaths according to DIN 43763

For sheath dia. in mm	Thread G	Wrench size SW	SW1 in mm	Length L	L1 in mm	Part No.	
Pipe fittings in steel with asbestos-free stuffing gland							
15	1/2"	32	36	80	17	00018468	●
15	3/4"	32	41	77	18	00018467	●
22	1"	41	46	95	20	00018469	●

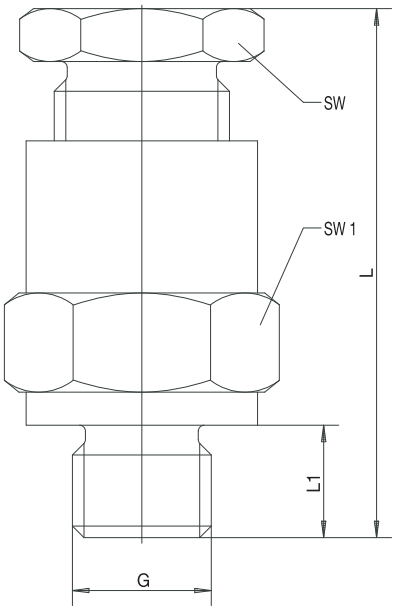

● available from stock

Item 1

JUMO GmbH & Co. KG
Delivery address: Mackenrodtstraße 14, 36039 Fulda, Germany
Postal address: 36035 Fulda, Germany
Phone: +49 661 6003-0
Fax: +49 661 6003-607
e-mail: mail@jumo.net
Internet: www.jumo.net

JUMO Instrument Co. Ltd.
JUMO House
Temple Bank, Riverway
Harlow, Essex CM20 2DY, UK
Phone: +44 1279 635533
Fax: +44 1279 635262
e-mail: sales@jumo.co.uk
Internet: www.jumo.co.uk

JUMO Process Control, Inc.
8 Technology Boulevard
Canastota, NY 13032, USA
Phone: 315-697-JUMO
1-800-554-JUMO
Fax: 315-697-5867
e-mail: info@jumo.us
Internet: www.jumo.us

Pipe fittings

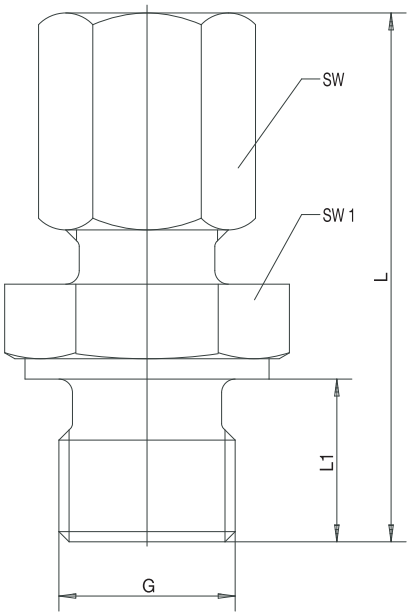

For sheath dia. in mm	Thread G	Wrench size SW	SW1 in mm	Length L	L1 in mm	Part No.	
Pipe fittings in steel with PTFE clamping ring for temperatures up to 260 °C							
1.0	M 8 x 1	10	12	29	8	00049700	●
1.5	M 8 x 1	10	12	29	8	00049701	●
2.0	M 8 x 1	12	12	25	8	00049702	●
3.0	M 8 x 1	12	12	25	8	00049703	●
4.5	M 8 x 1	10	12	29	8	00049704	●
6.0	1/4"	14	19	39	12	00049705	●
Pipe fittings in stainless steel X 6 CrNiMoTi 17 12 2, Material Ref. 1.4571 with PTFE clamping ring for temperatures up to 260 °C							
1.0	M 8 x 1	8	14	24	8	00049706	●
1.5	M 8 x 1	10	12	29	8	00049707	●
2.0	M 8 x 1	8	12	25	8	00049708	●
3.0	M 8 x 1	10	12	28	8	00049709	●
4.5	M 8 x 1	10	12	29	8	00049710	●
6.0	1/4"	19	14	41	12	00049711	●
Pipe fittings in stainless steel X 6 CrNiMoTi 17 12 2, Material Ref. 1.4571 with st. steel clamping ring for temperatures up to 600 °C							
1.5	M 8 x 1	8	12	23.5	8	00080809	●
3.0	M 8 x 1	10	14	27	8	00080810	●
6.0	M 10 x 1	14	14	34	8	00065416	●
6.0	1/4"	14	19	40	12	00080811	●
6.0	1/2"	14	27	44	14	00305445	●
12.0	1/2"	22	27	46	14	00312448	●
15.0	1/2"	27	27	42	14	00048311	●
Pipe fittings in steel with steel clamping ring for temperatures up to 500 °C							
6.0	3/8"	14	22	40	10	00057945	●
6.0	1/2"	12	27	40	12	00340227	●

● available from stock

JUMO GmbH & Co. KG
Delivery address: Mackenrodtstraße 14, 36039 Fulda, Germany
Postal address: 36035 Fulda, Germany
Phone: +49 661 6003-0
Fax: +49 661 6003-607
e-mail: mail@jumo.net
Internet: www.jumo.net

JUMO Instrument Co. Ltd.
JUMO House
Temple Bank, Riverway
Harlow, Essex CM20 2DY, UK
Phone: +44 1279 635533
Fax: +44 1279 635262
e-mail: sales@jumo.co.uk
Internet: www.jumo.co.uk

JUMO Process Control, Inc.
8 Technology Boulevard
Canastota, NY 13032, USA
Phone: 315-697-JUMO
1-800-554-JUMO
Fax: 315-697-5867
e-mail: info@jumo.us
Internet: www.jumo.us

Pipe fittings, spring-loaded

For sheath dia. in mm	Thread G inch	Wrench size SW	SW1 mm	Length L	L1 in mm	Part No.	
Pipe fittings in stainless steel X8CrNiS18-9, Mat. Ref. 1.4305 with stainless steel clamping ring for temperatures up to 180 °C							
8.0	1/2"	14	27	58	14	00462809	●

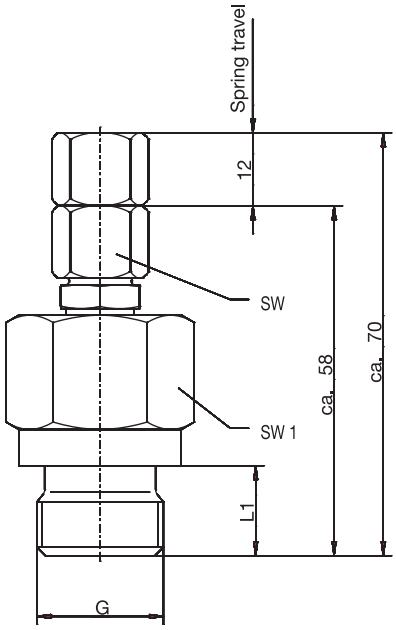

● available from stock

Item 3

Stop flanges according to DIN 43734

For sheath dia. in mm	Dimensions in mm a	b	c	d2	Part No.	
Stop flanges in cast iron						
15	75	50	55	16	00005784	●
22	90	65	70	23	00005785	●
32	90	65	70	33	00014955	●

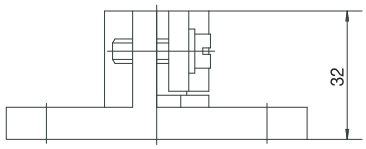

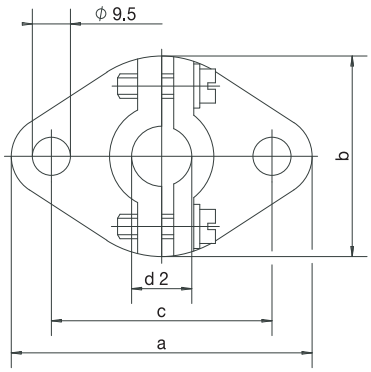

● available from stock

Item 4

JUMO GmbH & Co. KG
Delivery address: Mackenrodtstraße 14, 36039 Fulda, Germany
Postal address: 36035 Fulda, Germany
Phone: +49 661 6003-0
Fax: +49 661 6003-607
e-mail: mail@jumo.net
Internet: www.jumo.net

JUMO Instrument Co. Ltd.
JUMO House
Temple Bank, Riverway
Harlow, Essex CM20 2DY, UK
Phone: +44 1279 635533
Fax: +44 1279 635262
e-mail: sales@jumo.co.uk
Internet: www.jumo.co.uk

JUMO Process Control, Inc.
8 Technology Boulevard
Canastota, NY 13032, USA
Phone: 315-697-JUMO
1-800-554-JUMO
Fax: 315-697-5867
e-mail: info@jumo.us
Internet: www.jumo.us

Backing flanges for stop flanges according to DIN 43734

For sheath dia. in mm	Dimensions in mm a	b	c	d2	Part No.	
Backing flanges in cast iron						
15	75	50	55	15	00058371	●
22	90	65	70	22	00058372	●
32	90	65	70	32	00058373	●

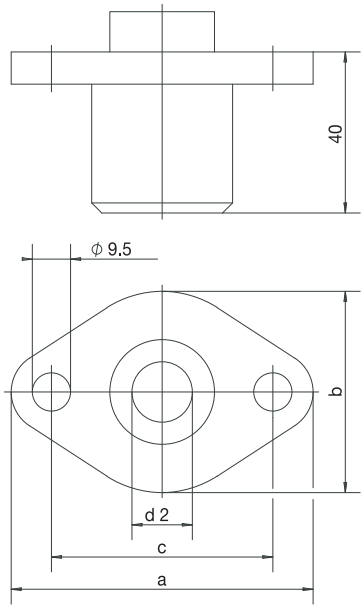

● available from stock

Item 5

Plate flanges

For sheath dia. in mm	Dimensions in mm a	b	c	d2	Part No.	
Plate flanges in galvanized steel						
6	85	40	65	6.3	00065062	●
8	85	40	65	8.3	00068165	●
10	85	40	65	10.3	00084190	●
11	85	40	65	11.3	00038513	●

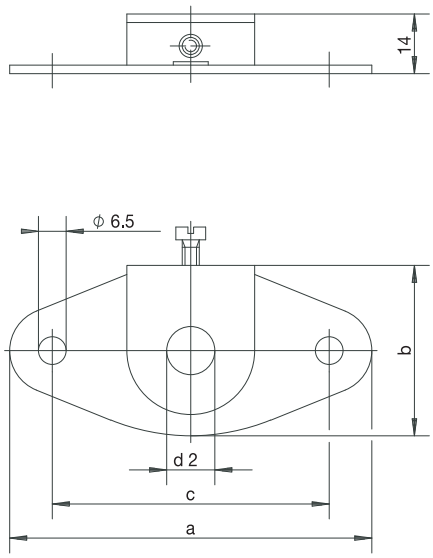

● available from stock

Item 6

JUMO GmbH & Co. KG
Delivery address: Mackenrodtstraße 14, 36039 Fulda, Germany
Postal address: 36035 Fulda, Germany
Phone: +49 661 6003-0
Fax: +49 661 6003-607
e-mail: mail@jumo.net
Internet: www.jumo.net

JUMO Instrument Co. Ltd.
JUMO House
Temple Bank, Riverway
Harlow, Essex CM20 2DY, UK
Phone: +44 1279 635533
Fax: +44 1279 635262
e-mail: sales@jumo.co.uk
Internet: www.jumo.co.uk

JUMO Process Control, Inc.
8 Technology Boulevard
Canastota, NY 13032, USA
Phone: 315-697-JUMO
1-800-554-JUMO
Fax: 315-697-5867
e-mail: info@jumo.us
Internet: www.jumo.us

Bayonet sockets SW for push-in RTD temperature probes

Thread G	Diameter D in mm	Diameter D1 in mm	Length L in mm	Length L1 in mm	Part No.	
Bayonet sockets SW in brass, Mat. Ref. 2.0401.20, nickel-plated						
M 12	12	8.5	30	10	00463477	
M 12 x 1	12	8.5	30	10	00449206	●
M 12 x 1	12	8.5	40	10	00452747	●
M 14 x 1.5	12	8.5	30	10	00463478	
1/4"	12	8.5	30	10	00463480	
1/4"	12	8.5	40	10	00452749	●
3/8"	12	8.5	30	10	00441893	●
M 10 x 1	12	6.5	30	10	00459226	●
M 12	12	6.5	30	10	00463484	
M 12 x 1	12	6.5	30	10	00463486	
M 14 x 1.5	12	6.5	30	10	00463488	●
1/4"	12	6.5	30	10	00463490	
3/8"	12	6.5	30	10	00463491	
M 12	14	8.5	30	10	00463492	
M 12 x 1	14	8.5	30	10	00463493	
M 14 x 1.5	14	8.5	30	10	00454811	●
1/4"	14	8.5	30	10	00463494	●

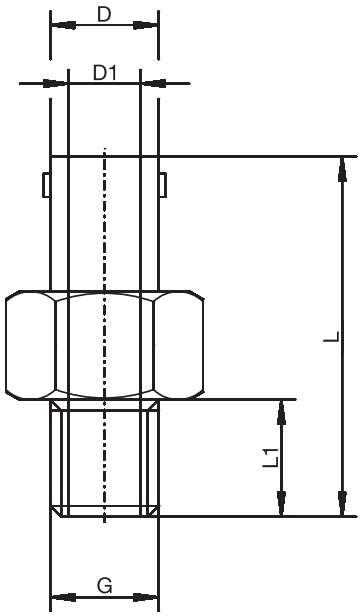

Minimum ordering quantity for non-stock parts: 10 items

● available from stock

Item 7

JUMO GmbH & Co. KG
Delivery address: Mackenrodtstraße 14, 36039 Fulda, Germany
Postal address: 36035 Fulda, Germany
Phone: +49 661 6003-0
Fax: +49 661 6003-607
e-mail: mail@jumo.net
Internet: www.jumo.net

JUMO Instrument Co. Ltd.
JUMO House
Temple Bank, Riverway
Harlow, Essex CM20 2DY, UK
Phone: +44 1279 635533
Fax: +44 1279 635262
e-mail: sales@jumo.co.uk
Internet: www.jumo.co.uk

JUMO Process Control, Inc.
8 Technology Boulevard
Canastota, NY 13032, USA
Phone: 315-697-JUMO
1-800-554-JUMO
Fax: 315-697-5867
e-mail: info@jumo.us
Internet: www.jumo.us

Bayonet sockets RD
for push-in RTD temperature probes

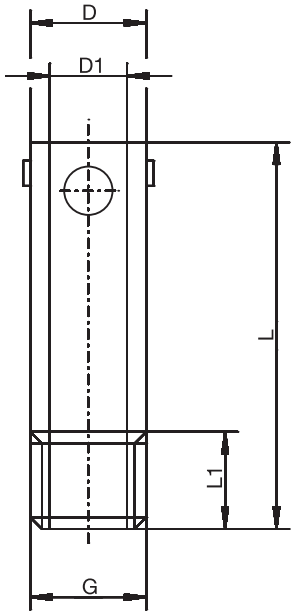

Thread G in mm	Diameter D in mm	Diameter D1 in mm	Length L in mm	Length L1 in mm	Part No.	
Bayonet sockets RD in brass, Mat. Ref. 2.0401.20, nickel-plated						
M 12	12	8.5	20	10	00463422	●
M 12	12	8.5	30	10	00463423	●
M 12	12	8.5	40	10	00463445	
M 12	12	8.5	50	10	00463446	
M 12 x 1	12	8.5	20	10	00451967	●
M 12 x 1	12	8.5	30	10	00463447	
M 12 x 1	12	8.5	40	10	00458580	●
M 12 x 1	12	8.5	50	10	00450720	●
M 12 x 1	12	8.5	60	10	00447366	●
1/4"	12	8.5	30	10	00463449	●
M 10 x 1	12	6.5	50	10	00463450	
M 12 x 1	12	6.5	30	10	00463451	
M 12 x 1	12	6.5	40	10	00458576	●
M 12 x 1	12	6.5	50	10	00463453	●
M 12	14	8.5	30	10	00463454	
M 12	14	8.5	40	10	00463455	
M 12	14	8.5	50	10	00463457	
M 12 x 1	14	8.5	30	10	00463460	
M 12 x 1	14	8.5	40	10	00463464	
M 12 x 1	14	8.5	50	10	00451641	●
M 14 x 1.5	14	8.5	30	10	00463465	
M 14 x 1.5	14	8.5	40	10	00463466	
M 14 x 1.5	14	8.5	50	10	00463467	●
1/4"	14	8.5	30	10	00463469	
1/4"	14	8.5	40	10	00463470	
1/4"	14	8.5	50	10	00463471	
M 12 x 1	14	6.5	30	10	00463474	
M 12 x 1	14	6.5	40	10	00463475	
M 12 x 1	14	6.5	50	10	00463476	
Bayonet sockets RD in stainless steel V4A, Mat. Ref. 1.4305						
M 12 x 1	12	8.5	50	10	00450338	●
M 12 x 1	12	8.5	60	10	00439597	●
M 12 x 1	12	8.5	100	10	00439640	●
M 10 x 1	12	6.5	60	10	00459471	●

Minimum ordering quantity for non-stock parts: 10 items

● available from stock

Item 8

JUMO GmbH & Co. KG
Delivery address: Mackenrodtstraße 14, 36039 Fulda, Germany
Postal address: 36035 Fulda, Germany
Phone: +49 661 6003-0
Fax: +49 661 6003-607
e-mail: mail@jumo.net
Internet: www.jumo.net

JUMO Instrument Co. Ltd.
JUMO House
Temple Bank, Riverway
Harlow, Essex CM20 2DY, UK
Phone: +44 1279 635533
Fax: +44 1279 635262
e-mail: sales@jumo.co.uk
Internet: www.jumo.co.uk

JUMO Process Control, Inc.
8 Technology Boulevard
Canastota, NY 13032, USA
Phone: 315-697-JUMO
1-800-554-JUMO
Fax: 315-697-5867
e-mail: info@jumo.us
Internet: www.jumo.us

Bayonet locks for push-in RTD temperature probes

Thread G in mm	Diameter D in mm	Length L in mm	Bayonet Dn in mm	Part No.
Bayonet locks in brass, Mat. Ref. 2.0401.20, nickel-plated				
5.4	15	18	12.2	00441183 ●
5.4	18	18	14.5	00441186 ●
5.4	18	18	15.2	00443446 ●
7.0	15	18	12.2	00441188 ●
7.0	18	18	14.5	00441198 ●
7.0	18	18	15.2	00443448 ●

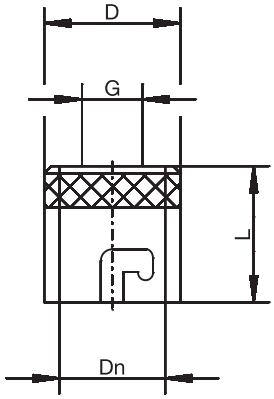

● available from stock

Item 9

JUMO GmbH & Co. KG
Delivery address: Mackenrodtstraße 14, 36039 Fulda, Germany
Postal address: 36035 Fulda, Germany
Phone: +49 661 6003-0
Fax: +49 661 6003-607
E-mail: mail@jumo.net
Internet: www.jumo.net

JUMO Instrument Co. Ltd.
JUMO House
Temple Bank, Riverway
Harlow - Essex CM20 2DY, UK
Phone: +44 1279 63 55 33
Fax: +44 1279 63 52 62
E-mail: sales@jumo.co.uk
Internet: www.jumo.co.uk

JUMO Process Control, Inc.
8 Technology Boulevard
Canastota, NY 13032, USA
Phone: 315-697-JUMO
1-800-554-JUMO
Fax: 315-697-5867
E-mail: info@jumo.us
Internet: www.jumo.us

Connectors

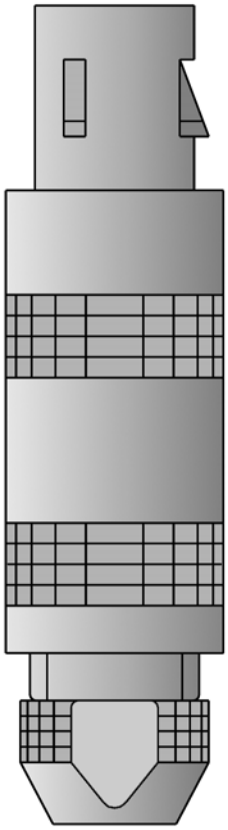

- **for temperatures from -60 to +260 °C**
- **problem-free replacement with fixed cables**
- **quick connection of test instruments**

Connectors for thermocouples (pages 1 to 3)
The connection between thermocouple and compensating cable is free from thermal emf if the contacts are made from the same material as the thermocouple.

Connectors for RTD temperature probes (pages 4 to 6)
The connection between resistance thermometer and connecting cable must have a low contact resistance to avoid introducing errors into the measurement. This is ensured by gold-plated contacts. The connector incorporates a locking device and is thus protected against shock and vibration.

Note: please state sales no. as per price sheet 90.9760 when ordering!

Standard connectors (free from thermal emf) for temperatures from -60 to +200 °C

Thermocouple	Color to ANSI	Part no.	
Standard coupling, plastic			
Fe-Con J	black	00049880	●
NiCr-Ni K	yellow	00049881	●
Pt10Rh-Pt S	green	00057278	●
Standard connector, plastic			
Fe-Con J	black	00044255	●
NiCr-Ni K	yellow	00044256	●
Pt10Rh-Pt S	green	00057277	●

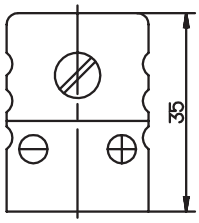

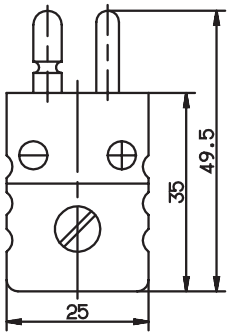

● available from stock

Item 1

JUMO GmbH & Co. KG
Delivery address: Mackenrodtstraße 14, 36039 Fulda, Germany
Postal address: 36035 Fulda, Germany
Phone: +49 661 6003-0
Fax: +49 661 6003-607
E-mail: mail@jumo.net
Internet: www.jumo.net

JUMO Instrument Co. Ltd.
JUMO House
Temple Bank, Riverway
Harlow - Essex CM20 2DY, UK
Phone: +44 1279 63 55 33
Fax: +44 1279 63 52 62
E-mail: sales@jumo.co.uk
Internet: www.jumo.co.uk

JUMO Process Control, Inc.
8 Technology Boulevard
Canastota, NY 13032, USA
Phone: 315-697-JUMO
1-800-554-JUMO
Fax: 315-697-5867
E-mail: info@jumo.us
Internet: www.jumo.us

Miniature connectors (free from thermal emf) for temperatures from -60 to +200 °C

Thermocouple	Color to ANSI	Part no.
Miniature coupling, plastic		
Fe-Con J	black	00057286 ●
NiCr-Ni K	yellow	00057287 ●
Pt10Rh-Pt S	green	00057288 ●
Miniature plug, plastic		
Fe-Con J	black	00057283 ●
NiCr-Ni K	yellow	00057284 ●
Pt10Rh-Pt S	green	00057285 ●

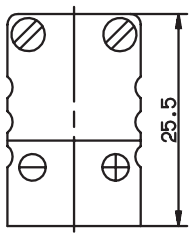

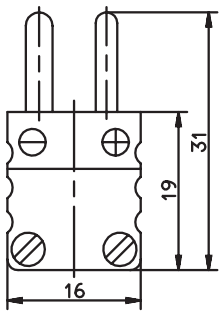

● available from stock

Item 2

Standard sockets for front panel with mounting plate for temperatures from -60 to +200 °C

Thermocouple	Color to ANSI	Part no.
Standard socket, plastic		
Fe-Con J	black	00057279 ●
NiCr-Ni K	yellow	00057280 ●
Pt10Rh-Pt S	green	00057281 ●

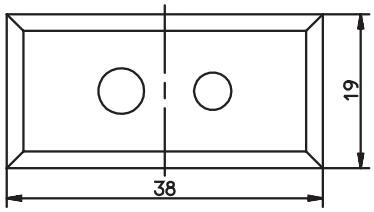

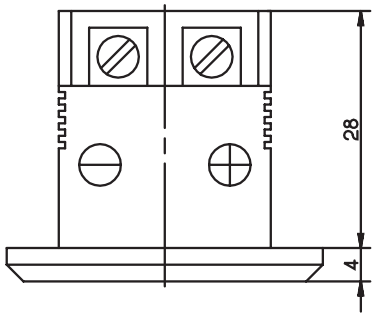

Note: panel cut-out 13 mm x 27 mm
panel thickness up to 5.0 mm

● available from stock

Item 3

JUMO GmbH & Co. KG
Delivery address: Mackenrodtstraße 14, 36039 Fulda, Germany
Postal address: 36035 Fulda, Germany
Phone: +49 661 6003-0
Fax: +49 661 6003-607
E-mail: mail@jumo.net
Internet: www.jumo.net

JUMO Instrument Co. Ltd.
JUMO House
Temple Bank, Riverway
Harlow - Essex CM20 2DY, UK
Phone: +44 1279 63 55 33
Fax: +44 1279 63 52 62
E-mail: sales@jumo.co.uk
Internet: www.jumo.co.uk

JUMO Process Control, Inc.
8 Technology Boulevard
Canastota, NY 13032, USA
Phone: 315-697-JUMO
1-800-554-JUMO
Fax: 315-697-5867
E-mail: info@jumo.us
Internet: www.jumo.us

Miniature socket for front panel with mounting plate for temperatures from -60 to +200 °C

Thermocouple	Color to ANSI	Part no.	
Miniature socket, plastic			
Fe-Con J	black	00057289	●
NiCr-Ni K	yellow	00057290	●
Pt10Rh-Pt S	green	00057291	●

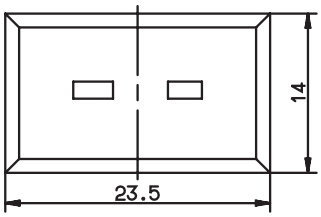

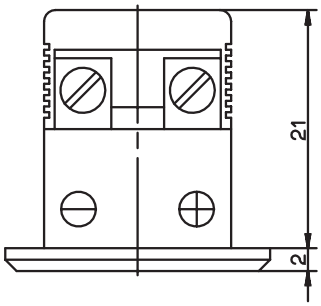

Note: panel cut-out 8.5 mm x 17 mm
panel thickness up to 5.5 mm

● available from stock

Item 4

JUMO GmbH & Co. KG
Delivery address: Mackenrodtstraße 14, 36039 Fulda, Germany
Postal address: 36035 Fulda, Germany
Phone: +49 661 6003-0
Fax: +49 661 6003-607
E-mail: mail@jumo.net
Internet: www.jumo.net

JUMO Instrument Co. Ltd.
JUMO House
Temple Bank, Riverway
Harlow - Essex CM20 2DY, UK
Phone: +44 1279 63 55 33
Fax: +44 1279 63 52 62
E-mail: sales@jumo.co.uk
Internet: www.jumo.co.uk

JUMO Process Control, Inc.
8 Technology Boulevard
Canastota, NY 13032, USA
Phone: 315-697-JUMO
1-800-554-JUMO
Fax: 315-697-5867
E-mail: info@jumo.us
Internet: www.jumo.us

LEMOSA connectors for temperatures from -60 to +260 °C

Diameter D in mm	Length L in mm	Part no.
LEMOSA plug 2-pin, size 0 for cable diameters up to 4.2 mm		
9	34.5	00049838 ●
LEMOSA plug 4-pin, size 0 for cable diameters up to 4.2 mm		
9	34.5	00049879 ●
LEMOSA plug 2-pin, size II for cable diameters up to 5.2 mm		
15	50.0	00049836 ●
LEMOSA plug 4-pin, size II for cable diameters up to 5.2 mm		
15	50.0	00049837 ●

Note: mineral-insulated RTD temperature probes, see Data Sheet 90.2210.

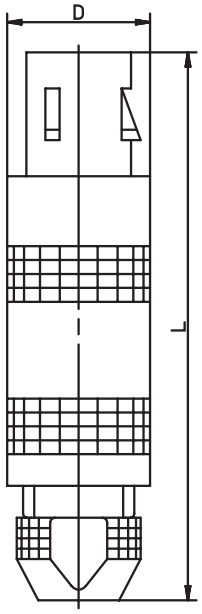

● available from stock

Item 5

LEMOSA coupling for temperatures from -60 to +260 °C

Diameter D in mm	Length L in mm	Part no.
LEMOSA coupling 2-pin, size 0 for cable diameters up to 4.2 mm		
9	35.0	00044806 ●
LEMOSA coupling 4-pin, size 0 for cable diameters up to 4.8 mm		
9	35.0	00326987 ●
LEMOSA coupling 4-pin, size II for cable diameters up to 6.7 mm		
15	52.5	00058087 ●

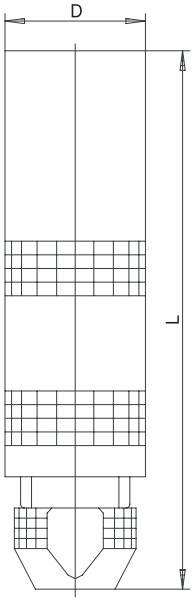

● available from stock

Item 6

JUMO GmbH & Co. KG
Delivery address: Mackenrodtstraße 14, 36039 Fulda, Germany
Postal address: 36035 Fulda, Germany
Phone: +49 661 6003-0
Fax: +49 661 6003-607
E-mail: mail@jumo.net
Internet: www.jumo.net

JUMO Instrument Co. Ltd.
JUMO House
Temple Bank, Riverway
Harlow - Essex CM20 2DY, UK
Phone: +44 1279 63 55 33
Fax: +44 1279 63 52 62
E-mail: sales@jumo.co.uk
Internet: www.jumo.co.uk

JUMO Process Control, Inc.
8 Technology Boulevard
Canastota, NY 13032, USA
Phone: 315-697-JUMO
1-800-554-JUMO
Fax: 315-697-5867
E-mail: info@jumo.us
Internet: www.jumo.us

Coupling for screw-in RTD temperature probes JUMO VIBROtemp Type 902040/10

Length L in mm	Temperature in °C	Part no.
Coupling, 4-part		
53	-20 to +80	00201426 ●
Coupling, 6-part, sealed to IP65		
80	-40 to +120	00089930 ●

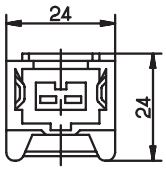

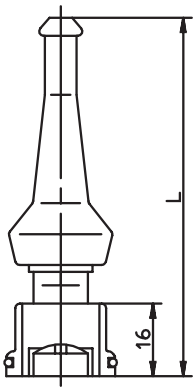

Note: screw-in RTD temperature probes, see Data Sheet 90.2040.

● available from stock

Item 7

Coupling with silicone-insulated connecting cable for screw-in RTD temperature probes JUMO VIBROtemp Type 902040/10, IP65

Length L in mm	Length L1 in mm	Temperature in °C	Part no.
80	2500	-40 to + 120	00308880 ●

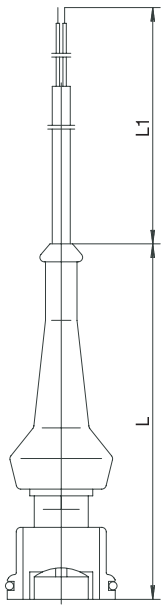

Note: screw-in RTD temperature probes, see Data Sheet 90.2040.

● available from stock

Item 8

JUMO GmbH & Co. KG
Delivery address: Mackenrodtstraße 14, 36039 Fulda, Germany
Postal address: 36035 Fulda, Germany
Phone: +49 661 6003-0
Fax: +49 661 6003-607
E-mail: mail@jumo.net
Internet: www.jumo.net

JUMO Instrument Co. Ltd.
JUMO House
Temple Bank, Riverway
Harlow - Essex CM20 2DY, UK
Phone: +44 1279 63 55 33
Fax: +44 1279 63 52 62
E-mail: sales@jumo.co.uk
Internet: www.jumo.co.uk

JUMO Process Control, Inc.
8 Technology Boulevard
Canastota, NY 13032, USA
Phone: 315-697-JUMO
1-800-554-JUMO
Fax: 315-697-5867
E-mail: info@jumo.us
Internet: www.jumo.us

Coupling for screw-in RTD temperature probes
JUMO VIBROtemp Type 902040/15, IP67/IP69K

	Temperature in °C	Part No.
Coupling, 6-part, sealed, IP67/IP69K	-40 to +130	00439715 ●

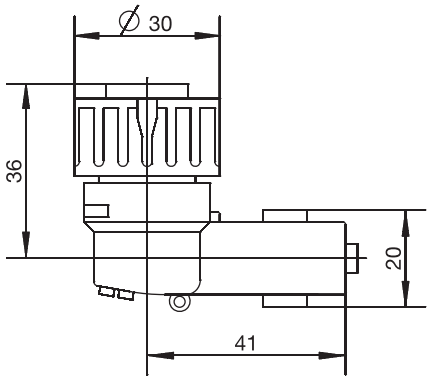

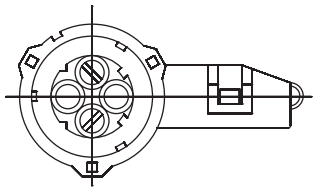

Note: screw-in RTD temperature probes, see Data Sheet 90.2040.

● available from stock

Item 9

JUMO GmbH & Co. KG
Delivery address: Mackenrodtstraße 14
36039 Fulda, Germany
Postal address: 36035 Fulda, Germany
Phone: +49 661 6003-0
Fax: +49 661 6003-607
Email: mail@jumo.net
Internet: www.jumo.net

JUMO Instrument Co. Ltd.
JUMO House
Temple Bank, Riverway
Harlow, Essex, CM20 2DY, UK
Phone: +44 1279 63 55 33
Fax: +44 1279 62 50 29
Email: sales@jumo.co.uk
Internet: www.jumo.co.uk

JUMO Process Control, Inc.
6733 Myers Road
East Syracuse, NY 13057, USA
Phone: +1 315 437 5866
Fax: +1 315 437 5860
Email: info.us@jumo.net
Internet: www.jumousa.com

Platinum temperature sensors	**No.**
Construction and application of platinum temperature sensors Tolerances for platinum temperature sensors Reference values according to EN 60751	906000
Installation Instructions Application Notes for Platinum-Chip Temperature Sensors	906121.4

Wire temperature sensors to EN 60751

Platinum-ceramic temperature sensors (PK style)	906022

Thin-film temperature sensors to EN 60751

Platinum-chip temperature sensors with connecting wires (PCA style)	906121
Platinum-chip temperature sensors in SMD style on epoxy card (PCSE style)	906122
Platinum-chip temperature sensors with terminal clamps (PCKL style)	906123
Platinum-chip temperature sensors in SMD style (PCS style)	906125

JUMO GmbH & Co. KG
Delivery address: Mackenrodtstraße 14, 36039 Fulda, Germany
Postal address: 36035 Fulda, Germany
Phone: +49 661 6003-0
Fax: +49 661 6003-607
e-mail: mail@jumo.net
Internet: www.jumo.net

JUMO Instrument Co. Ltd.
JUMO House
Temple Bank, Riverway
Harlow, Essex CM20 2DY, UK
Phone: +44 1279 635533
Fax: +44 1279 635262
e-mail: sales@jumo.co.uk
Internet: www.jumo.co.uk

JUMO Process Control, Inc.
8 Technology Boulevard
Canastota, NY 13032, USA
Phone: 315-697-JUMO
1-800-554-JUMO
Fax: 315-697-5867
e-mail: info@jumo.us
Internet: www.jumo.us

Construction and application of platinum temperature sensors

Introduction

As long as 130 years ago, Sir William Siemens made the suggestion that the change of electrical resistance of metals as a result of changes in temperature could be utilized for the measurement of temperature itself. The material to be used should be a noble metal: platinum, since platinum shows characteristics that are not shared by other metals. In 1886 Siemens continued to develop the platinum RTD temperature probe, and, by taking appropriate precautions, constructed a precision RTD temperature probe that was suitable for measuring high temperatures.

Since then, platinum RTD temperature probes have been used as indispensable devices for measuring temperature as a physical variable. These days, specially adapted designs make it possible to cover a multitude of applications over the temperature range from -200 to +850 °C. Platinum thermometers can thus be used not only in industrial measurement technology, but in sectors such as HVAC engineering, householde quipment, medical and electrical engineering, as well as in automobile technology.

Wirewound platinum temperature sensors on a glass or ceramic core as well as platinum chip sensors made in thin-film technology are incorporated as the temperature-sensitive heart of theRTD temperature probe.

Temperature-dependent resistance

Platinum temperature sensors use the effect of the temperature-dependence of the electrical resistance of the noble metal platinum. Since the electrical resistance increases with rising temperature, we speak of a positive temperature coefficient (often abbreviated to PTC) for such temperature sensors.

In order to use this effect for measuring temperature, the metal must vary its electrical resistance with temperature in a reproducible manner. The characteristic properties of the metal must not change during operation, as this would result in measurement errors. The temperature coefficient should, as far as possible, be independent of temperature, pressure and chemical influences.

Standardized platinum temperature sensors

For more than 130 years, platinum has been the basic material of choice for temperature-dependent sensors. It has the advantage that it is highly resistant to corrosion, is relatively easy to work (especially in wire manufacture), is available in a very pure state and exhibits good reproducibility of its electrical properties. In order to maintain the features noted above and to ensure interchangeability, these characteristics are defined in the internationally valid standard IEC 751 (translated in Germany as the DIN EN 60751).

This standard specifies the electrical resistance as a function of temperature (table of reference values), permissible tolerances (as tolerance classes), the characteristic curves and usable temperature range.

The characteristic curves are calculated using certain coefficients, whereby the calculation distinguishes between the temperature ranges from -200 to 0 °C and from 0 to 850 °C.

The range -200 to 0 °C is covered by a third-order polynomial:

$$R(t) = R_0 (1 + A \times t + B \times t^2 + C \times (t - 100°C) \times t^3)$$

A sencond-order polynominal is applied for range 0 to 850 °C

$$R(t) = R_0 (1 + A \times t + B \times t^2)$$

with the coefficients

$$A = 3.9083 \times 10^{-3}\ °C^{-1}$$
$$B = -5.775 \times 10^{-7}\ °C^{-2}$$
$$C = -4.183 \times 10^{-12}\ °C^{-4}$$

The term R_0 is referred to as the nominal value, and represents the resistance at 0 °C.

According to EN 60751, the nominal value is 100.000 at 0 °C. It is therefore referred to as a Pt100 temperature sensor.

Temperature sensors with higher nominal values are also available on the market, such as Pt500 and Pt1000.

They have greater sensitivity, since the slope of the characteristic is directly proportional to R_0, the nominal value. Their advantage thus lies in the fact that their resistance has a larger change with temperature.

The resistance change in the temperature-range up to 100 °C is approximately:

- 0.4 Ω /°C for Pt100 temperature sensors
- 2.0 Ω /°C for Pt500 temperature sensors and
- 4.0 Ω /°C for Pt1000 temperature sensors.

As an additional parameter, the standard defines a mean temperature coefficient between 0 °C and 100 °C.

It represents the average change in resistance, referred to the nominal value at 0 °C:

$$\alpha = \frac{R_{100} - R_0}{R_0 \times 100\ °C} = 3{,}850 \times 10^{-3}\ °C^{-1}$$

R_0 and R_{100} are the resistance values for the temperatures 0 °C and 100°C respectively.

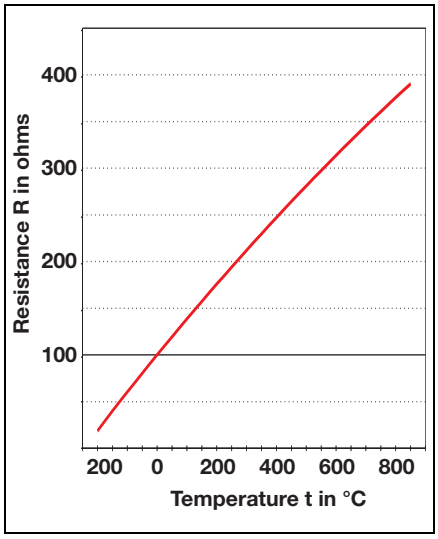

Fig. **1: Pt100 characteristic**

Calculating the temperature from the resistance

For the use as a thermometer, the resistance of the temperature sensor is used to calculate the corresponding temperature. The formulae cited above define the variation in electrical resistance as a function of temperature.

For temperatures above 0 °C, a closed form of the representation of the characteristic according to EN 60751 can be derived to determine the temperature.

$$t = \frac{-R_0 \times A + [(R_0 \times A)^2 - 4 \times R_0 \times B \times (R_0 - R)]^{1/2}}{2 \times R_0 \times B}$$

R	= resistance, measured in Ω
t	= temperature, calculated in °C
R_0, A, B	= parameters as per EN 60751

JUMO GmbH & Co. KG
Delivery address: Mackenrodtstraße 14, 36039 Fulda, Germany
Postal address: 36035 Fulda, Germany
Phone: +49 661 6003-0
Fax: +49 661 6003-607
e-mail: mail@jumo.net
Internet: www.jumo.net

JUMO Instrument Co. Ltd.
JUMO House
Temple Bank, Riverway
Harlow, Essex CM20 2DY, UK
Phone: +44 1279 635533
Fax: +44 1279 635262
e-mail: sales@jumo.co.uk
Internet: www.jumo.co.uk

JUMO Process Control, Inc.
8 Technology Boulevard
Canastota, NY 13032, USA
Phone: 315-697-JUMO
1-800-554-JUMO
Fax: 315-697-5867
e-mail: info@jumo.us
Internet: www.jumo.us

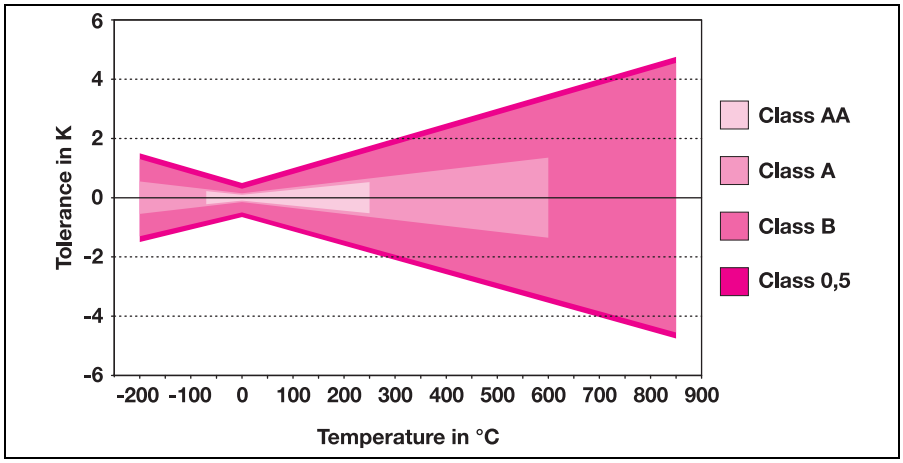

Fig. 2: Tolerance band as a function of the temperature

Tolerance class	Sensor category	Temperature range in °C	Tolerance in K
Class AA	Thin-film Wire	-50 to +200 -70 to +250	± (0.10 °C + 0.0017 × |t|
Class A	Thin-film Wire	-50 to +200 -70 to +250	± (0.10 °C + 0.0017 × |t|
Class B	Thin-film Wire	-50 to +200 -70 to +250	± (0.10 °C + 0.0017 × |t|
Class 0.5	Thin-film Wire	-50 to +200 -70 to +250	± (0.10 °C + 0.0017 × |t|
			|t| = measured temperature in °C (without sign)

Table 1: Tolerance classes - Temperature validity range

Temperature in °C	Class AA in °C	Class A in °C	Class B in °C	Class 0.5 in °C
-200		0.55	1.30	1.70
-70	0.22	0.29	0.65	0.92
0	0.10	0.15	0.30	0.50
100	0.27	0.35	0.80	1.10
250	0.53	0.65	1.55	2.00
350		0.85	2.05	2.60
600		1.35	3.30	4.10
850			4.55	5.60

Table 2: ± Tolerance in °C according to class

Tolerance limits

The standard distinguishies between two tolerance classes:

Class A: $\Delta t = \pm (0.15 + 0.002 \times |t|)$
Class B: $\Delta t = \pm (0.30 + 0.005 \times |t|)$

t = temperature, in °C (without math. sign)

The calculation of the tolerance limit ΔR in Ω at a temperature of t > 0 °C is given by:

$$\Delta R = R_0 (A + 2 \times B \times t) \times \Delta t$$

For t < 0 °C it is:

$$\Delta R = R_0 (A + 2 \times B \times t - 300\,°C \times t^2 + 4 \times C \times t^3) \times \Delta t$$

Tolerance Class A applies for temperatures from -200 to +600 °C.

Tolerance Class B applies for the entire defined range from -200 to +850 °C.

Extended tolerance classes

The two tolerance classes specified in the standard are frequently inadequate for certain applications. JUMO has defined a further division of the tolerance classes, based on the standardized tolerances, in order to cover the widest possible range of applications throughout the market.

In addition to the definition equations for the temperature-dependent deviations, the range of validity has also been defined. Because of the inexactly linear relationship between the resistance and temperature, measurements must be made at various temperatures to determine the deviations from the standard curve 3 (for t > 0 °C) or 4 (for t < 0 °C) respectively. For series manufacture of temperature sensors, tests are generally made only at 0 °C and 100 °C. So it is not possible to make a precise determination of the individual characteristic of a temperature sensor. Since, on the one hand, it is not possible to make the measurement uncertainty endlessly small and, on the other hand, the characteristic curve is subject to variations caused by production tolerances, the range of validity of the narrower tolerance classes must be restricted compared with the measuring range of the temperature sensor.

Another conclusion from this situation is that the temperature classes cannot be narrowed without limit.

Practical situation

Temperature sensors with tightened tolerances usually have a considerably wider measuring range. This has the practical result that temperature sensors which are used at the upper or lower temperature limits can only achieve the given tolerance within the range of validity. Outside the range of validity, it is possible that the tolerance will be exceeded and then the standard Class B tolerance must be applied.

JUMO GmbH & Co. KG
Delivery address: Mackenrodtstraße 14, 36039 Fulda, Germany
Postal address: 36035 Fulda, Germany
Phone: +49 661 6003-0
Fax: +49 661 6003-607
e-mail: mail@jumo.net
Internet: www.jumo.net

JUMO Instrument Co. Ltd.
JUMO House
Temple Bank, Riverway
Harlow, Essex CM20 2DY, UK
Phone: +44 1279 635533
Fax: +44 1279 635262
e-mail: sales@jumo.co.uk
Internet: www.jumo.co.uk

JUMO Process Control, Inc.
8 Technology Boulevard
Canastota, NY 13032, USA
Phone: 315-697-JUMO
1-800-554-JUMO
Fax: 315-697-5867
e-mail: info@jumo.us
Internet: www.jumo.us

Measurement point

Before delivery, all temperature sensors are completely checked and measured, and selected into tolerance classes. The measurement uncertainty of the classification equipment is taken into account. During the measurement, both the temperature sensors and the connecting wires are at the specific temperature for the measurement. Four-wire connections are made 2 mm from the open ends of the connecting wires. During further processing of the temperature sensors it must be noted that any alteration of the length of the connecting wires will alter the resistance for 2-wire measurement. In exceptional cases this may cause the tolerance limits to be exceeded, positively or negatively.

Self-heating

In order to obtain an output signal from a temperature sensor, a current must flow through the sensor. This measuring current generates heat losses which warm up the temperature sensor. The result is an higher indicated temperature. Self-heating depends on various factors, one of which is the extent to which the self-generated heat can be removed by the medium being measured.

The formula for electrical power $P = R \times I^2$ means that this effect also depends on the nominal resistance value (R) of the temperature sensor: For a given measuring current, a Pt1000 temperature sensor will generate 10 times as much heat as a Pt100. So the advantage of higher sensitivity brings the disadvantage of increased self-heating.

If a temperature rise of 0.1 °C is permitted in running water, then the current level for wire-wound ceramic temperature sensors will be between 3 and 50 mA, depending on the size, and for thin-film temperature sensors it will be about 1 mA.

In still air the permissible current level will have to be reduced by a factor of about 50. If the temperature sensor is mounted in a protective fitting, then the self-heating characteristics will be altered. The permissible current levels lie between the two extremes noted above, and depend on the thermal boundaries, size, heat conduction, and heat capacity of the protective fitting.

Thermometer manufacturers often state a self-heating coefficient in the corresponding documentation. This coefficient provides a value for the temperature increase caused by a defined power loss produced in the temperature sensor. Such calorimetric measurements are carried out under defined conditions (in water flowing at 0.2 meters/sec or air at 2 meters/sec) but the results have a somewhat theoretical nature and are used as figures of merit when comparing different types of construction. In most cases, the manufacturer defines the measuring current as 1 mA, since this value has proven to be an acceptable practical value that does not generate a significant amount of self-heating.

For instance, if a 1 mA measuring current is passed through a Pt100 sensor mounted in a (thermally) completely insulated container with an air volume of 10 cm^3, then the air will be warmed up by about 39 °C after one hour. Any flow of gas or liquid will reduce this effect, because of the considerably increased removal of the heat that is generated.

The self-heating must be measured at the point of installation, depending on the circumstance of the measuring setup. The temperature must be measured at various different current levels. The self-heating coefficient E can then be derived as follows:

$$E = \Delta t/(R \times I^2)$$

Δt = (indicated temperature) – (temperature of the medium)

R = resistance of the temperature sensor

I = measuring current

The self-heating coefficient can then be used to define the maximum permissible measuring current for a given permissible measurement error Δt.

$$I = (\Delta t/E \times R)^{1/2}$$

Long-term behavior

In addition to the tolerance of the temperature sensor, the long-term behavior is an important parameter, since it is the major factor determining the maintenance of the measurement uncertainty during the operating life of the device under its defined conditions. The values given in the data sheets are guidance values, determined through measurements on the specific type of sensor, not made-up in any way, in an oven with a normal atmosphere. The further processing of the temperature sensors and the characteristics of the materials with which it comes into contact may affect the long-term stability. It is therefore to be recommended that the long-term stability of a particular design should be established under the intended operating conditions, so that external influences may also be taken into account.

Response

If the temperature sensor is subjected to a sudden change in temperature, then there will be a distinct time lag before it has taken up the new temperature. This time is dependent on the style of the temperature sensor and the ambient conditions, such as the medium being measured and the flowrate of the same. The figures given in the data sheets refer to measurements in agitated water, at a flow of v = 0.4 meters/sec orin air at a flow of 1 meter/sec.

The response times for other media can be calculated with the aid of the heat transfer coefficient as per VDI/VDE 3522. Fig. 3 shows a typical response curve (transfer function).

The specific times derived are those taken by the sensor to reach 50 % or 90 % of the final (steady) value.

The transfer function, i.e. the way in which the measured value changes after a step change in temperature at the sensor, provides this information.

The transfer function is measured by passing a current of warm water or air across the temperature sensor.

Two times (settling times) characterize thetransfer function:

- **Half-value time $t_{0,5}$**
  This is the time taken for the measurement to reach 50 % of the final value,

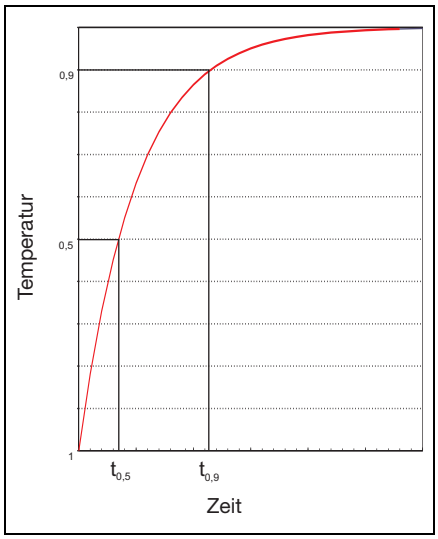

Fig. 3: Transfer function

and the

- **90 % time $t_{0.9}$**
  in which 90 % of the final value is reached.

A time t, the time taken to reach 63.2 % of the final value, is not give, because it is easily mistaken for the time constant of an exponential function. The heat transfer function of practically all temperature sensors shows significant deviations from such a function.

JUMO GmbH & Co. KG
Delivery address: Mackenrodtstraße 14, 36039 Fulda, Germany
Postal address: 36035 Fulda, Germany
Phone: +49 661 6003-0
Fax: +49 661 6003-607
e-mail: mail@jumo.net
Internet: www.jumo.net

JUMO Instrument Co. Ltd.
JUMO House
Temple Bank, Riverway
Harlow, Essex CM20 2DY, UK
Phone: +44 1279 635533
Fax: +44 1279 635262
e-mail: sales@jumo.co.uk
Internet: www.jumo.co.uk

JUMO Process Control, Inc.
8 Technology Boulevard
Canastota, NY 13032, USA
Phone: 315-697-JUMO
1-800-554-JUMO
Fax: 315-697-5867
e-mail: info@jumo.us
Internet: www.jumo.us

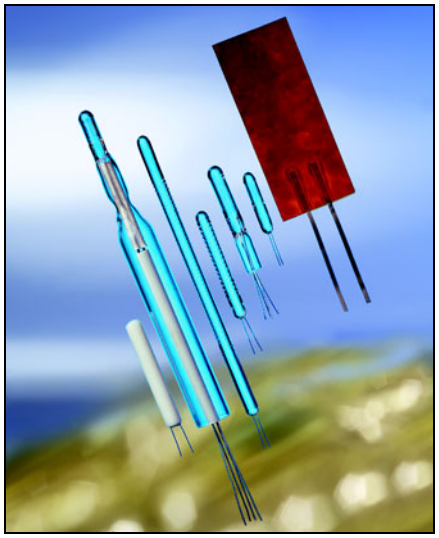

Fig. 4: Product selection

Styles

Principally, platinum temperature sensors can be divided into two fundamentally different categories. We can distinguish between temperature sensors with a solidwire winding in glass, ceramic or foil versions, and temperature sensors manufactured using the latest thin-filmtechnology. The classic platinum temperature sensor is based on the wirewound construction.

In spite of partially automated production processes, a common feature of all such styles is a high level of manual labor in production.

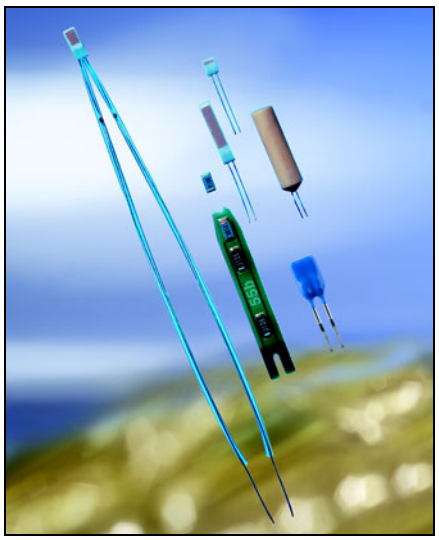

Fig. 5: Product selection

Wirewound temperature sensors

Fig. 6: Producing temperature sensors under clean-room conditions

Platinum-glass temperature sensors (PG style)

Platinum-glass temperature sensors belong to the category of wirewound constructions. One or two measurement windings are wound on a glass rod, each in the form of a bifilar winding. The winding is fused onto the glass and provided with connecting wires. The nominal resistance value is calibrated by altering the length of the winding. Afterwards, a sleeve is pushed over the glass rod + measurement winding, and the components are then fused together.

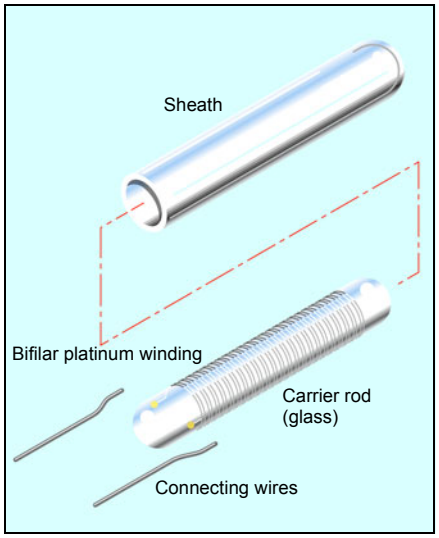

Fig. 7: Basic construction of platinum-glass temperature sensors (PG style)

The glass that is used is matched to the expansion coefficient of the platinum wire. An additional artificial ageing process ensures that good long-term stability is achieved. The operating temperature covers the range from -200 to +400 °C.

JUMO platinum-glass temperature sensors are distinguished by a design that is extremely resistant to shock and vibration. Furthermore, the connecting wires exhibit a very high tensile strength. Another advantage of this style is that the temperature sensors can readily be used for measurement in highly humid environments or directly in the liquid, thanks to the hermetic sealing of the measurement winding and the excellent chemical resistance of the glass. In addition, the familiar protection tube - a necessary component with other styles - can now be dispensed with, allowing short responsetimes.

A wide variety of platinum-glass temperature sensors is available in many different geometries. As well as the versions with a standard nominal resistance of 100 Ω at 0 °C, JUMO also supplies platinum-glass temperature sensors with 500 Ω and 1000 Ω nominal values, as well as special values on request. Versions with a glass extension or double measurement windings are also possible.

Platinum-glass laboratory RTD temperature probes

Electrical glass thermometers for laboratory applications frequently have to meet especially high demands.

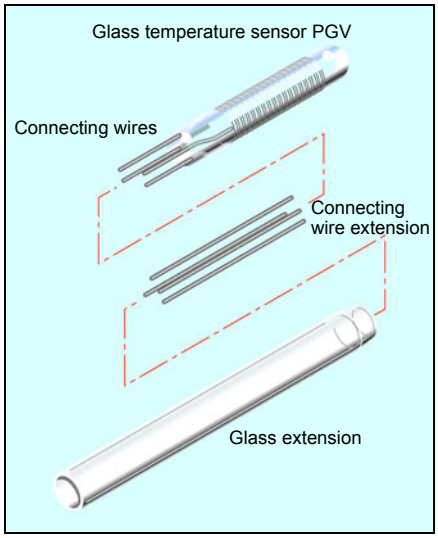

Fig. 8: Basic construction of platinum-glass temperature sensors with glass extension (style for laboratory RTD temperature probes)

Laboratory RTD temperature probes are made by a supplementary processing of platinum-glass temperature sensors. Temperature sensors in the PGL style, for instance, can be fitted with glass tube extensions in various lengths. Depending on the specific measurement task, such glass extensions can also be supplied with a standard ground joint, diameter graduations, or even as angled versions.

The electrical connection of the resistance thermometer is made via a connector system (e.g. LEMOSA), or directly through an attached cable. Connections can be made in 2-wire, 3-wire or 4-wire circuit, according to choice. Laboratory RTD temperature probes

JUMO GmbH & Co. KG
Delivery address: Mackenrodtstraße 14, 36039 Fulda, Germany
Postal address: 36035 Fulda, Germany
Phone: +49 661 6003-0
Fax: +49 661 6003-607
e-mail: mail@jumo.net
Internet: www.jumo.net

JUMO Instrument Co. Ltd.
JUMO House
Temple Bank, Riverway
Harlow, Essex CM20 2DY, UK
Phone: +44 1279 635533
Fax: +44 1279 635262
e-mail: sales@jumo.co.uk
Internet: www.jumo.co.uk

JUMO Process Control, Inc.
8 Technology Boulevard
Canastota, NY 13032, USA
Phone: 315-697-JUMO
1-800-554-JUMO
Fax: 315-697-5867
e-mail: info@jumo.us
Internet: www.jumo.us

can optionally be supplied in a variety of tolerance classes, such as the tighter tolerance of Class A as per EN 60751. JUMO laboratory RTD temperature probes can also be delivered with a DKD calibration certificate.

As a specialist for manufacturing a wide product spectrum, JUMO offers solutions for many customer-specific requirements.

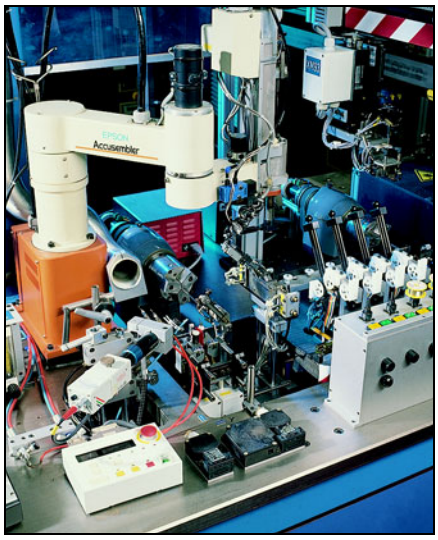

Fig. 9: Automated production of wirewound platinum-glass temperature sensors

Platinum-ceramic temperature sensors (PK style)

Platinum-ceramic temperature sensors use a ceramic tube as the carrier material, in which there are either two or four bores, depending on the version to be produced. A platinum coil that has already been calibrated and fitted with connection wires is inserted into each of the bores. Platinum-glass temperature sensors therefore also belong to the category of wirewound constructions. The remaining space in the bores is then filled with a lumina powder, to fix the coils and to improve heat transfer. Both ends of the ceramic body are then closed with a sealing compound that is fused on. This seals off the embedded measurement windings and also stabilizes the connecting wires. Platinum-ceramic temperature sensors are available with diameters as small as 0.9 mm. Their overall length varies, in general, from 4 to 30 mm. As far as the nominal value is concerned, this style is normally only available with Pt100 temperature sensors.

Platinum-ceramic temperature sensors are mainly used for high-temperature measurement. They have the highest overall usable temperature range, stretching from -200 to +800 °C.

The special internal construction of the platinum-ceramic temperature sensors largely prevents permanent changes in the resistance value, which may occur in other styles as a result of substantial temperature cycling or shock-like temperature changes.

However, the application of this style must be restricted if strong vibration or shocks are to be expected in the application.

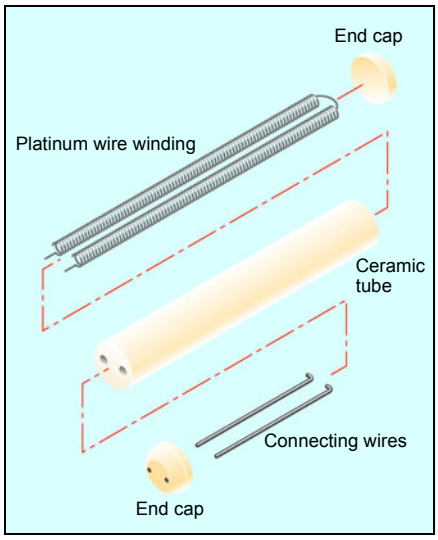

Fig. 10: Basic construction of platinum-ceramic temperature sensors (PK style)

Platinum-foil temperature sensors (PF style)

Like glass or ceramic temperature sensors, platinum-foil temperature sensors also belong to the category of wirewound styles. A winding of solid platinum wire isembedded between two self-adhesive polyimide foils. The platinum winding is calibrated through the adjustment of the winding length, before the foils are joined. The electrical characteristics conform to EN 60751. Two nickel tapes are taken out to form the electrical connection.

JUMO platinum-foil temperature sensors are especially suitable for measurements on flat or even slightly curved surfaces. Furthermore, their flexibility and small thickness enable measurements at sites that are difficult to access. Thanks to their low intrinsic massand relatively large surface area, these foil temperature sensors achieve fast response. Foil temperature sensors are designed for applications at temperatures from -80 to +180 °C.

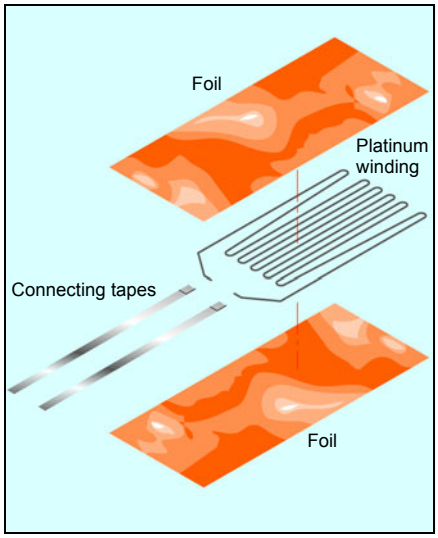

Fig. 11: Basic construction of platinum-foil temperature sensors (PF style)

JUMO GmbH & Co. KG
Delivery address: Mackenrodtstraße 14, 36039 Fulda, Germany
Postal address: 36035 Fulda, Germany
Phone: +49 661 6003-0
Fax: +49 661 6003-607
e-mail: mail@jumo.net
Internet: www.jumo.net

JUMO Instrument Co. Ltd.
JUMO House
Temple Bank, Riverway
Harlow, Essex CM20 2DY, UK
Phone: +44 1279 635533
Fax: +44 1279 635262
e-mail: sales@jumo.co.uk
Internet: www.jumo.co.uk

JUMO Process Control, Inc.
8 Technology Boulevard
Canastota, NY 13032, USA
Phone: 315-697-JUMO
1-800-554-JUMO
Fax: 315-697-5867
e-mail: info@jumo.us
Internet: www.jumo.us

Thin-film temperature sensors

Since the early 80s, JUMO has taken production processes from semiconductor technology and used them to manufacture platinum-chip temperature sensors. This was linked to the start of a continual process of miniaturization that is not yet at an end, even today, and is following two routes: a reduction of component sizes and an increase in nominal values, and, parallel to this technological development, a continual reduction of production costs, so that the technical advantages of platinum-chip temperature sensors can also be used in mass production applications.

Platinum-chip temperature sensors with connecting wires (PCA style)

Platinum-chip temperature sensors are manufactured in the latest thin-film techniques, in clean-room conditions. Unlike the wirewound versions, the platinum layer in thin-film temperature sensors is applied to a ceramic substrate through a sputtering process.

This platinum coating is then formed into a serpentine structure by a photolithographic process, and then adjusted by a laser-trimming method.

The electrical connection is made through special contact areas, onto which the connecting wires are bonded. A fused layer of glass protects the platinum serpentine from external influences and also serves as insulation.

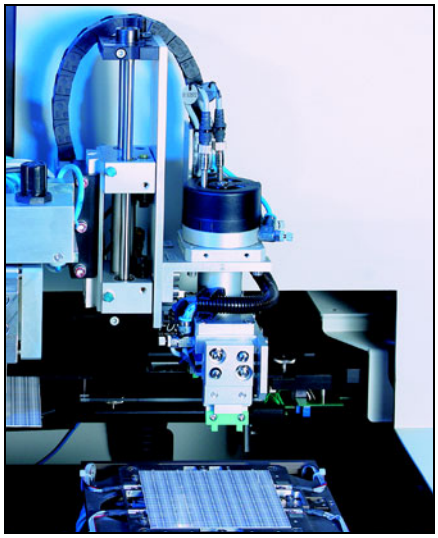

Fig. 12: Laser trimming of platinum-chip temperature sensors

The contact areas of the connecting wires on the sensor are fixed by another glass layer, which also provides strain relief.

The temperature at which platinum-chip temperature sensors can be used depends on the version, and is usually in the range from -70 to +600 °C. Platinum-chip temperature sensors can also be used to some extent at much lower temperatures, if they are previously given a special artificial ageing treatment.

Thin-film temperature sensors combine the favorable properties of a platinum sensor, such as interchangeability, long-term stability, reproducibility and wide temperature measurement range, with the advantages of large-scale production. And, thanks to the small dimensions and low mass, very fast response times are achieved. In addition, they can also achieve high nominal values in very small dimensions, compared with glass and ceramic temperature sensors.

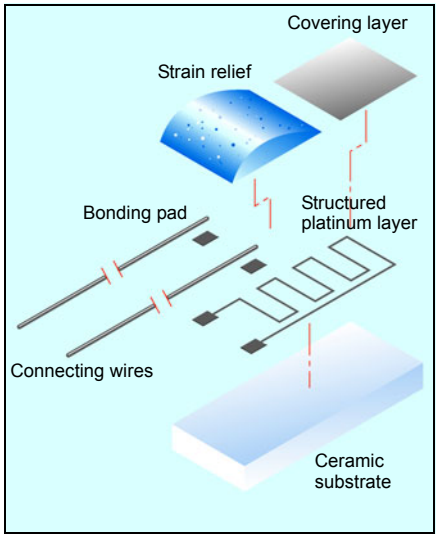

Fig. 13: Basic construction of platinum-chip temperature sensors with connecting wires (PCA style)

Platinum-chip temperature sensors with terminal clamps (PCKL style)

PCKL style platinum-chip temperature sensors are manufactured in the sameway as the standard PCA styles. However, there are some differences in the connecting wire techniques that are used.

Compared with the standard PCA style temperature sensors, these sensors do not feature bonded connecting wires, but have terminal clamps that are soldered on.

These terminal clamps are especially rigid and exhibit a high bending strength. This characteristic gives the temperature sensors an outstanding directional stability.

PCKL style platinum-chip temperature sensors are thus preferred for various types of probe construction in climatic measurement technology. The entire temperature sensor, including the solder joint and terminal clamps (with bare wire ends), is additionally coated with a protective varnish, to protect against condensation and external effects.

The operating temperature range is -40 to +105 °C.

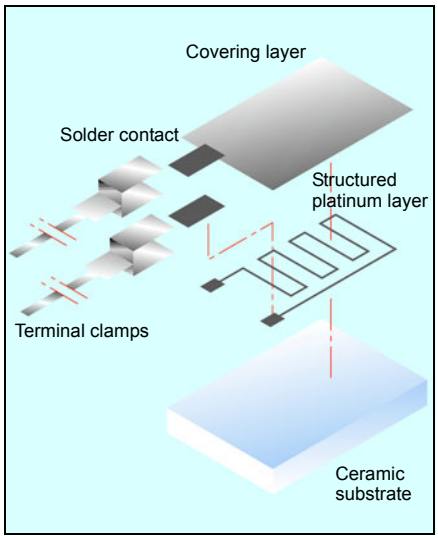

Fig. 14: Basic construction of platinum-chip temperature sensors with terminal clamps (PCKL style)

JUMO GmbH & Co. KG
Delivery address: Mackenrodtstraße 14, 36039 Fulda, Germany
Postal address: 36035 Fulda, Germany
Phone: +49 661 6003-0
Fax: +49 661 6003-607
e-mail: mail@jumo.net
Internet: www.jumo.net

JUMO Instrument Co. Ltd.
JUMO House
Temple Bank, Riverway
Harlow, Essex CM20 2DY, UK
Phone: +44 1279 635533
Fax: +44 1279 635262
e-mail: sales@jumo.co.uk
Internet: www.jumo.co.uk

JUMO Process Control, Inc.
8 Technology Boulevard
Canastota, NY 13032, USA
Phone: 315-697-JUMO
1-800-554-JUMO
Fax: 315-697-5867
e-mail: info@jumo.us
Internet: www.jumo.us

Platinum-chip temperature sensors in cylindrical style (PCR style)

Basically, this style incorporates a platinum-chip temperature sensor which is inserted into a ceramic sleeve that is open at one end. After inserting the platinum-chip temperature sensor, the opening of the ceramic sleeve is hermetically sealed with a sealing compound. The round body of this type of platinum-chip temperature sensor enables a good adaptation to the inner walls of protection tubes, and also protects the sensor from external influences. In addition, this style exhibits high mechanical rigidity, thus facilitating an embedding in many types of bulk adhesive. It is frequently used in the construction of equipment and machinery.

JUMO temperature sensors in cylindrical style present a cost-effective alternative to wire-wound ceramic temperature sensors.

Platinum-chip temperature sensors in this cylindrical style are designed for operating temperatures from -70 to +300 °C.

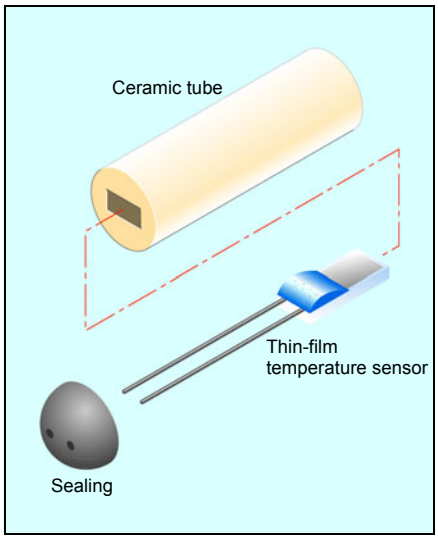

Fig. 15: Basic construction of platinum-chip temperature sensors in cylindrical form (PCR style)

Platinum-chip temperature sensors in SMD style (PCS style)

Platinum-chip temperature sensors in SMD-style belong to the category of thin-film temperature sensors.

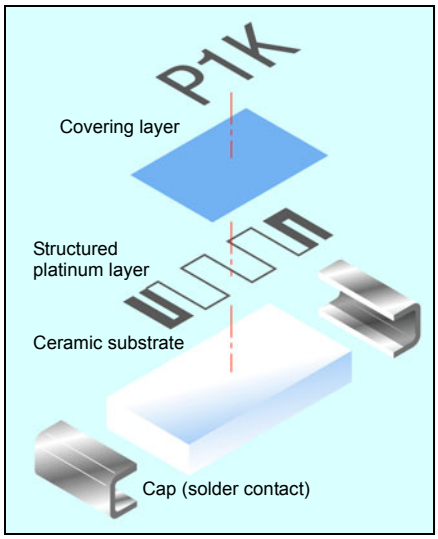

Fig. 16: Basic construction of platinum-chip temperature sensors in SMD style (PCS style)

Like the similarly designed PCA styles, they are manufactured in the latest thin-film techniques, in clean-room conditions. During production of these temperature sensors, a platinum layer, which constitutes the active layer, is formed into a serpentine structure and applied to a ceramic substrate.

The platinum serpentine is provided with two solder contacts at the opposing lengthwise ends of the temperature sensor, to make the electrical connection. The glass layer that is applied after the adjustment protects the platinum serpentine against external effects.

Unlike wire-ended styles, SMD temperature sensors are specially designed for automatic placing on electronic circuit boards in large-scale production.

Platinum-chip temperature sensors on epoxy card (PCSE style)

PCSE style platinum-chip temperature sensors constitute a pre-assembled version. The epoxy card carries an assembled SMD temperature sensor as the active component to acquire the temperature. The resistance signal is transmitted to the contact surfaces on opposing sides, via thin tracks. At these points, a variety of connecting wires can be attached for a range of wire-ended probe versions. The use of this style (with a base card) has the advantage that any possible tension on the connecting cable cannot be transmitted directly to the temperature sensor. Furthermore, the thin conductor tracks achieve a considerable reduction of any measurement error caused by heat conduction.

This style was designed especially as a measuring insert, making it considerably easier to fabricate different versions of wire-ended probes. This also enables automated production steps, thus achieving the lowest possible cost levels.

PCSE style platinum-chip temperature sensors are suitable for operation over a temperature range from -20 to +150 °C.

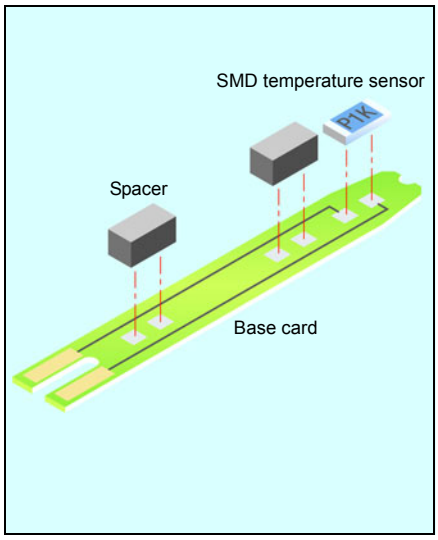

Fig. 17: Basic construction of platinum-chip temperature sensors on epoxy card (PCSE style)

JUMO GmbH & Co. KG
Delivery address: Mackenrodtstraße 14, 36039 Fulda, Germany
Postal address: 36035 Fulda, Germany
Phone: +49 661 6003-0
Fax: +49 661 6003-607
e-mail: mail@jumo.net
Internet: www.jumo.net

JUMO Instrument Co. Ltd.
JUMO House
Temple Bank, Riverway
Harlow, Essex CM20 2DY, UK
Phone: +44 1279 635533
Fax: +44 1279 635262
e-mail: sales@jumo.co.uk
Internet: www.jumo.co.uk

JUMO Process Control, Inc.
8 Technology Boulevard
Canastota, NY 13032, USA
Phone: 315-697-JUMO
1-800-554-JUMO
Fax: 315-697-5867
e-mail: info@jumo.us
Internet: www.jumo.us

Reference values to EN 60751 (ITS 90)

in Ohm for Pt100 temperature sensors in 1 °C steps

°C	-0	-1	-2	-3	-4	-5	-6	-7	-8	-9
-200	18.520	-	-	-	-	-	-	-	-	-
-190	22.825	22.397	21.967	21.538	21.108	20.677	20.247	19.815	19.384	18.952
-180	27.096	26.671	26.245	25.819	25.392	24.965	24.538	24.110	23.682	23.254
-170	31.335	30.913	30.490	30.067	29.643	29.220	28.796	28.371	27.947	27.552
-160	35.543	35.124	34.704	34.284	33.864	33.443	33.022	32.601	32.179	31.757
-150	39.723	39.306	38.889	38.472	38.055	37.637	37.219	36.800	36.382	35.963
-140	43.876	43.462	43.048	42.633	42.218	41.803	41.388	40.972	40.556	40.140
-130	48.005	47.593	47.181	46.769	46.356	45.944	45.531	45.117	44.704	44.290
-120	52.110	51.700	51.291	50.881	50.470	50.060	49.649	49.239	48.828	48.416
-110	56.193	55.786	55.378	54.970	54.562	54.154	53.746	53.337	52.928	52.519
-100	60.256	59.850	59.445	59.039	58.633	58.227	57.821	57.414	57.007	56.600
- 90	64.300	63.896	63.492	63.088	62.684	62.280	61.876	61.471	61.066	60.661
- 80	68.325	67.924	67.552	67.120	66.717	66.315	65.912	65.509	65.106	64.703
- 70	72.335	71.934	71.534	71.134	70.733	70.332	69.931	69.530	69.129	68.727
- 60	76.328	75.929	75.530	75.131	74.732	74.333	73.934	73.534	73.134	72.735
- 50	80.306	79.909	79.512	79.114	78.717	78.319	77.921	77.523	77.125	76.726
- 40	84.271	83.875	83.479	82.083	82.687	82.290	81.894	81.497	81.100	80.703
- 30	88.222	87.827	87.432	87.038	86.643	86.248	85.853	85.457	85.062	84.666
- 20	92.160	91.767	91.373	90.980	90.586	90.192	89.798	89.404	89.010	88.616
- 10	96.086	95.694	95.302	94.909	94.517	94.124	93.732	93.339	92.946	92.553
0	100.000	99.609	99.218	98.827	98.436	98.044	97.653	97.261	96.870	96.478

°C	0	1	2	3	4	5	6	7	8	9
0	100.000	100.391	100.781	101.172	101.562	101.953	102.343	102.733	103.123	103.513
10	103.903	104.292	104.682	105.071	105.460	105.849	106.238	106.627	107.016	107.405
20	107.794	108.182	108.570	108.959	109.347	109.735	110.123	110.510	110.898	111.286
30	111.673	112.060	112.447	112.835	113.221	113.608	113.995	114.382	114.768	115.155
40	115.541	115.927	116.313	116.699	117.085	117.470	117.856	118.241	118.627	119.012
50	119.397	119.782	120.167	120.552	120.936	121.321	121.705	122.090	122.474	122.858
60	123.242	123.626	124.009	124.393	124.777	125.160	125.543	125.926	126.309	126.692
70	127.075	127.458	127.840	128.223	128.605	128.987	129.370	129.752	130.133	130.515
80	130.897	131.278	131.660	132.041	132.422	132.803	133.184	133.565	133.946	134.326
90	134.707	135.087	135.468	135.848	136.228	136.608	136.987	137.367	137.747	138.126
100	138.506	138.885	139.264	139.643	140.022	140.400	140.779	141.158	141.536	141.914
110	142.293	142.671	143.049	143.426	143.804	144.182	144.559	144.937	145.314	145.691
120	146.068	146.445	146.822	147.198	147.575	147.951	148.328	148.704	149.080	149.456
130	149.832	150.208	150.583	150.959	151.334	151.710	152.085	152.460	152.865	153.210
140	153.584	153.959	154.333	154.708	155.082	155.456	155.830	156.204	156.578	156.952
150	157.325	157.699	158.072	158.445	158.818	159.191	159.564	159.937	160.309	160.682
160	161.054	161.427	161.799	162.171	162.543	162.915	163.286	163.658	164.030	164.401
170	164.772	165.143	165.514	165.885	166.256	166.627	166.997	167.368	167.738	168.108
180	168.478	168.848	169.218	169.588	169.958	170.327	170.696	171.066	171.435	171.804
190	172.173	172.542	172.910	173.279	173.648	174.016	174.384	174.752	175.120	175.488
200	175.856	176.224	176.591	176.959	177.326	177.693	178.060	178.427	178.794	179.161
210	179.528	179.894	180.260	180.627	180.993	181.359	181.725	182.091	182.456	182.822
220	183.188	183.553	183.918	184.283	184.648	185.013	185.378	185.743	186.107	186.472
230	186.836	187.200	187.564	187.928	188.292	188.656	189.019	189.383	189.746	190.110
240	190.473	190.836	191.199	191.562	191.924	192.287	192.649	193.012	193.374	193.736
250	194.098	194.460	194.822	195.183	195.545	195.906	196.268	196.629	196.990	197.351
260	197.712	198.073	198.433	198.794	199.154	199.514	199.875	200.235	200.595	200.954
270	201.314	201.674	202.033	202.393	202.752	203.111	203.470	203.829	204.188	204.546
280	204.905	205.263	205.622	205.980	206.338	206.696	207.054	207.411	207.769	208.127
290	208.484	208.841	209.198	209.555	209.912	210.269	210.626	210.982	211.339	211.695
300	212.052	212.408	212.764	213.120	213.475	213.831	214.187	214.542	214.897	215.252

The reference values have been calculted according to the International Temperature Scale ITS 90 (for Pt500 and Pt1000 temperature sensors, the reference values have to be multiplied by 5 or 10 respectively).

JUMO GmbH & Co. KG
Delivery address: Mackenrodtstraße 14, 36039 Fulda, Germany
Postal address: 36035 Fulda, Germany
Phone: +49 661 6003-0
Fax: +49 661 6003-607
e-mail: mail@jumo.net
Internet: www.jumo.net

JUMO Instrument Co. Ltd.
JUMO House
Temple Bank, Riverway
Harlow, Essex CM20 2DY, UK
Phone: +44 1279 635533
Fax: +44 1279 635262
e-mail: sales@jumo.co.uk
Internet: www.jumo.co.uk

JUMO Process Control, Inc.
8 Technology Boulevard
Canastota, NY 13032, USA
Phone: 315-697-JUMO
1-800-554-JUMO
Fax: 315-697-5867
e-mail: info@jumo.us
Internet: www.jumo.us

Reference values to EN 60751 (ITS 90)

in Ohm for Pt100 temperature sensors in 1 °C steps

°C	0	1	2	3	4	5	6	7	8	9
310	215.608	215.962	216.317	216.672	217.027	217.381	217.736	218.090	218.444	218.798
320	219.152	219.506	219.860	220.213	220.567	220.920	221.273	221.626	221.979	222.332
330	222.685	223.038	223.390	223.743	224.095	224.447	224.799	225.151	225.503	225.855
340	226.206	226.558	226.909	227.260	227.612	227.963	228.314	228.664	229.015	229.366
350	229.716	230.066	230.417	230.767	231.117	231.467	231.816	232.166	232.516	232.865
360	233.214	233.564	233.913	234.262	234.610	234.959	235.308	235.656	236.005	236.353
370	236.701	237.049	237.397	237.745	238.093	238.440	238.788	239.135	239.482	239.829
380	240.176	240.523	240.870	241.217	241.563	241.910	242.256	242.602	242.948	243.294
390	243.640	243.986	244.331	244.677	245.022	245.367	245.713	246.058	246.403	246.747
400	247.092	247.437	247.781	248.125	248.470	248.814	249.158	249.502	249.845	250.189
410	250.533	250.876	251.219	251.562	251.906	252.248	252.591	252.934	253.277	253.619
420	253.962	254.304	254.646	254.988	255.330	255.672	256.013	256.355	256.696	257.038
430	257.379	257.720	258.061	258.402	258.743	259.083	259.424	259.764	260.105	260.445
440	260.785	261.125	261.465	261.804	262.144	262.483	262.823	263.162	263.501	263.840
450	264.179	264.518	264.857	265.195	265.534	265.872	266.210	266.548	266.886	267.224
460	267.562	267.900	268.237	268.574	268.912	269.249	269.586	269.923	270.260	270.597
470	270.933	271.270	271.606	271.942	272.278	272.614	272.950	273.286	273.622	273.957
480	274.293	274.628	274.963	275.298	275.633	275.968	276.303	276.638	276.972	277.307
490	277.641	277.975	278.309	278.643	278.977	279.311	279.644	279.978	280.311	280.644
500	280.978	281.311	281.643	281.976	282.309	282.641	282.974	283.306	283.638	283.971
510	284.303	284.634	284.966	285.298	285.629	285.961	286.292	286.623	286.954	287.285
520	287.616	287.947	288.277	288.608	288.938	289.268	289.599	289.929	290.258	290.588
530	290.918	291.247	291.577	291.906	292.235	292.565	292.894	293.222	293.551	293.880
540	294.208	294.537	294.865	295.193	295.521	295.849	296.177	296.505	296.832	297.160
550	297.487	297.814	298.142	298.469	298.795	299.122	299.449	299.775	300.102	300.428
560	300.754	301.080	301.406	301.732	302.058	302.384	302.709	303.035	303.360	303.685
570	304.010	304.335	304.660	304.985	305.309	305.634	305.958	306.282	306.606	306.930
580	307.254	307.578	307.902	308.225	308.549	308.872	309.195	309.518	309.841	310.164
590	310.487	310.810	311.132	311.454	311.777	312.099	312.421	312.743	313.065	313.386
600	313.708	314.029	314.351	314.672	314.993	315.314	315.635	315.956	316.277	316.597
610	316.918	317.238	317.558	317.878	318.198	318.518	318.838	319.157	319.477	319.796
620	320.116	320.435	320.754	321.073	321.391	321.710	322.029	322.347	322.666	322.984
630	323.302	323.620	323.938	324.256	324.573	324.891	325.208	325.526	325.843	326.160
640	326.477	326.794	327.110	327.427	327.744	328.060	328.376	328.692	329.008	329.324
650	329.640	329.956	330.271	330.587	330.902	331.217	331.533	331.848	332.162	332.477
660	332.792	333.106	333.421	333.735	334.049	334.363	334.677	334.991	335.305	335.619
670	335.932	336.246	336.559	336.872	337.185	337.498	337.811	338.123	338.436	338.748
680	339.061	339.373	339.685	339.997	340.309	340.621	340.932	341.244	341.555	341.867
690	342.178	342.489	342.800	343.111	343.422	343.732	344.043	344.353	344.663	344.973
700	345.284	345.593	345.903	346.213	346.522	346.832	347.141	347.451	347.760	348.069
710	348.378	348.686	348.995	349.303	349.612	349.920	350.228	350.536	350.844	351.152
720	351.460	351.768	352.075	352.382	352.690	352.997	353.304	353.611	353.918	354.224
730	354.531	354.837	355.144	355.450	355.756	256.062	356.368	356.674	356.979	357.285
740	357.590	357.896	358.201	358.506	358.811	359.116	359.420	359.725	360.029	360.334
750	360.638	360.942	361.246	361.550	361.854	362.158	362.461	362.765	363.068	363.371
760	363.674	363.977	364.280	364.583	364.886	365.188	365.491	365.793	366.095	366.397
770	366.699	367.001	367.303	367.604	367.906	368.207	368.508	368.810	369.111	369.412
780	369.712	370.013	370.314	370.614	370.914	371.215	371.515	371.815	372.115	372.414
790	372.714	373.013	373.313	373.612	373.911	374.210	374.509	374.808	375.107	375.406
800	375.704	376.002	376.301	376.599	376.897	377.195	377.493	377.790	378.088	378.385
810	378.683	378.980	379.277	379.574	379.871	380.167	380.464	380.761	381.057	381.353
820	381.650	381.946	382.242	382.537	382.833	383.129	383.424	383.720	384.015	384.310
830	384.605	384.900	385.195	385.489	385.784	386.078	386.373	386.667	386.961	387.255
840	387.549	387.843	388.136	388.430	388.723	389.016	389.310	389.603	389.896	390.188
850	390.481	-	-	-	-	-	-	-	-	-

The reference values have been calculted according to the International Temperature Scale ITS 90 (for Pt500 and Pt1000 temperature sensors, the reference values have to be multiplied by 5 or 10 respectively).

JUMO GmbH & Co. KG
Delivery address: Mackenrodtstraße 14, 36039 Fulda, Germany
Postal address: 36035 Fulda, Germany
Phone: +49 661 6003-0
Fax: +49 661 6003-607
e-mail: mail@jumo.net
Internet: www.jumo.net

JUMO Instrument Co. Ltd.
JUMO House
Temple Bank, Riverway
Harlow, Essex CM20 2DY, UK
Phone: +44 1279 635533
Fax: +44 1279 635262
e-mail: sales@jumo.co.uk
Internet: www.jumo.co.uk

JUMO Process Control, Inc.
8 Technology Boulevard
Canastota, NY 13032, USA
Phone: 315-697-JUMO
1-800-554-JUMO
Fax: 315-697-5867
e-mail: info@jumo.us
Internet: www.jumo.us

Electrical Temperature Measurement with thermocouples and RTD temperature probes

by Matthias Nau

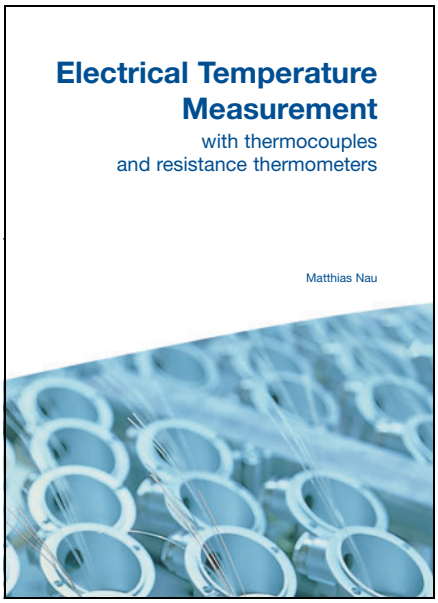

Fig. 18: Publication „Electrical Temperature Measurement with thermocouples and RTD temperature probes“

Electrical temperature sensors have become indispensable components in modern automation, consumer goods and production technology. Particularly as a result of the rapid expansion of automation in recent years, they have become firmly established in industrial engineering.

In view of the large spectrum of products available for the electrical measurement of temperature, it is becoming ever more important for the user to select the one suitable for his application.

On 160 pages this publication deals with the theoretical fundamentals of electrical temperature measurement, the practical construction of temperature sensors, their standardization, electrical connection, tolerances and types of construction.

In addition, it describes in detail the different fittings for electrical thermometers, their classification according to DIN standards, and the great variety of applications. An extensive section of tables for standard values of voltage and resistance according to DIN and EN makes this book a valuable guide, both for the experienced practical engineer and for the novice in the field of electrical temperature measurement.

To be ordered under Sales No. 90/00085081 or as a download from www.jumo.net

Schools, institutes and universities are asked to make joint orders, because of the high handling costs.

Error Analysis of a Temperature Measurement System with worked examples

by Gerd Scheller

The 44-page publication helps in the evaluation of measurement uncertainty, particularly through the worked examples in Chapter 3. Where problems arise, we are happy to discuss specific problems with our customers, and to provide practical advice.

In order to make comparable measurements, their quality must be established through details of the measurement uncertainty.

The ISO/BIPM „Guide to the Expression of Uncertainty in Measurement“, published in 1993 and usually referred to as GUM, introduced a standardized method for the determination and definition of measurement uncertainty.

This method was adopted by calibration laboratories around the world. However, the application requires a certain level of mathematical understanding.

Furtherchapters present the topic of measurement uncertainty in a simplified and easily understandable fashion for all users of temperature measurement systems.

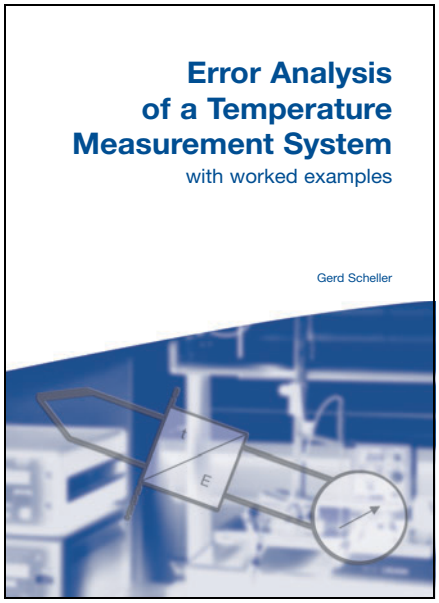

Fig. 19: Publication „Error Analysis of a Temperature Measurement System with worked examples“

Errors in the installation of the temperature sensors and the connections to the evaluation electronics lead to increased errors in measurement. To these must be added the measurement uncertainty components of the sensor and the evaluation electronics itself.

The explanation of the various components of measurement uncertainty is followed by some worked examples.

Knowledge of the various measurement uncertainty components and their magnitudes enables the user to reduce individual components through the selection of equipment or altered installation conditions. The decisive factor is always, which level of measurement uncertainty is acceptable for a specific measurement task. For instance, if a standard specifies tolerance limits for the deviation of a temperature from a given value, then the measurement uncertainty of the method used for temperature measurement should not exceed 1/3 of the tolerance.

To be ordered under Sales No. 90/00413510 or as a download from www.jumo.net.

Schools, institutes and universities are asked to make joint orders, because of the high handling costs.

German Calibration Service (DKD) at JUMO

Certification laboratory for temperature

Raised quality expectations, improved measurement technology and, of course, quality assurance systems such as ISO 9000, make increasing demands on the documentation of processes and the monitoring of measuring equipment. To this must be added customers' demands for products with a high standard of quality. Particularly stringent demands arise from the ISO 9000 and EN 45000 standards, whereby measurements must be traceable to national or international reference standards. This provides the legal basis for obliging suppliers and manufacturers (of products that are subject to processes where temperature is relevant) to check all test and measurement equipment that can affect the product quality, before use or at prescribed intervals. Generally, this is done by calibration or adjustment using certified equipment. Because of the high demand for calibrated instruments and the large number of instruments to be calibrated, the state laboratories have insufficient capacity. The industry has there fore established and supports special calibration laboratories which are linked to the German Calibration Service (DKD) and, in matters of measurement technology, subordinate to the Physikalisch-Technische Bundesanstalt (PTB).The certification laboratory of the German Calibration Service at JUMO has carried out calibration certification for temperature since 1992. This establishment provides fast and economical certification as a service for everyone. DKD calibration certificates can be issued for RTD temperature probes, thermocouples, direct-reading measurement sets, data loggers, temperature block calibrators and temperature probes with built-in transmitters, within the range -80 to +1100 °C.

The traceability of the reference standard is the central issue here. All DKD calibration certificates are therefore recognized as documents of traceability, without any further specifications. The DKD calibration laboratory at JUMO has the identification DKD-K-09501-04 and is accredited to DIN ENISO/IEC 17 025.

You can get a free brochure (at present only available in German) by asking for Publication No. PR 90029 or as a download from www.jumo.net.

JUMO GmbH & Co. KG
Delivery address: Mackenrodtstraße 14, 36039 Fulda, Germany
Postal address: 36035 Fulda, Germany
Phone: +49 661 6003-0
Fax: +49 661 6003-607
e-mail: mail@jumo.net
Internet: www.jumo.net

JUMO Instrument Co. Ltd.
JUMO House
Temple Bank, Riverway
Harlow, Essex CM20 2DY, UK
Phone: +44 1279 635533
Fax: +44 1279 635262
e-mail: sales@jumo.co.uk
Internet: www.jumo.co.uk

JUMO Process Control, Inc.
8 Technology Boulevard
Canastota, NY 13032, USA
Phone: 315-697-JUMO
1-800-554-JUMO
Fax: 315-697-5867
e-mail: info@jumo.us
Internet: www.jumo.us

Platinum-ceramic temperature sensors to EN 60 751

- **for temperatures from -200 to +800 °C**
- **standardized nominal values and tolerances**
- **as single or twin temperature sensor**
- **wide temperature measuring range**
- **high resistance to temperature shock**
- **excellent stability, even with varying temperatures**

Introduction

Platinum-ceramic temperature sensors use a ceramic tube as the housing base, in which there are either two or four bores. Depending on the version to be produced, platinum coils that have already been calibrated and fitted with connecting wires are inserted into these bores. The remaining space in the bores is then filled with highly pure alumina powder, to fix the coils and to improve heat transfer. Finally, both ends of the ceramic tube are closed with a sealing compound that is fused on. This seals off the embedded measurement winding and also relieves the strain on the connecting wires.

Platinum-ceramic temperature sensors are highly appreciated, mainly because of their wide application temperature range. Depending on the version, the maximum range covers temperatures from -200 to +800°C. In addition, the special internal construction of these temperature sensors ensures excellent temperature stability and shock resistance. A further advantage is the close adherence of the characteristic to the EN 60 751 standard, from which this style deviates only very slightly.

Platinum-ceramic temperature sensors are suitable for almost any application. The comprehensive selection of sizes available from stock and the high accuracy of the dimensional tolerances enable simple and universal processing.

Main application areas include industrial probes for elevated temperatures, and analytical and laboratory technology.

JUMO platinum temperature sensors

Construction and application of platinum temperature sensors	Data Sheet 90.6000
Platinum-glass temperature sensors	Data Sheet 90.6021
Platinum-ceramic temperature sensors	Data Sheet 90.6022
Platinum-foil temperature sensors	Data Sheet 90.6023
Platinum-glass temperature sensors with glass extension	Data Sheet 90.6024
Platinum-chip temperature sensors with connecting wires	Data Sheet 90.6121
Platinum-chip temperature sensors on epoxy card	Data Sheet 90.6122
Platinum-chip temperature sensors with terminal clamps	Data Sheet 90.6123
Platinum-chip temperature sensors in cylindrical style	Data Sheet 90.6124
Platinum-chip temperature sensors in SMD style	Data Sheet 90.6125

PK style

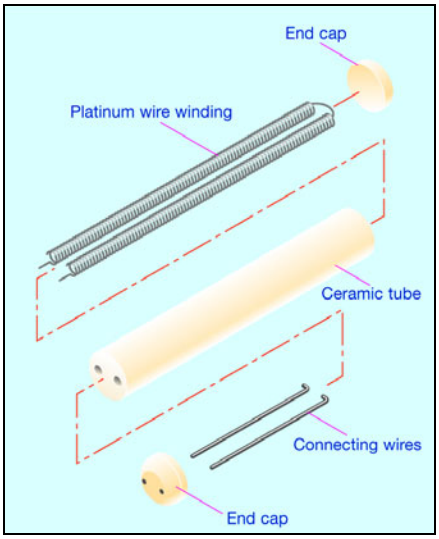

Technical publication

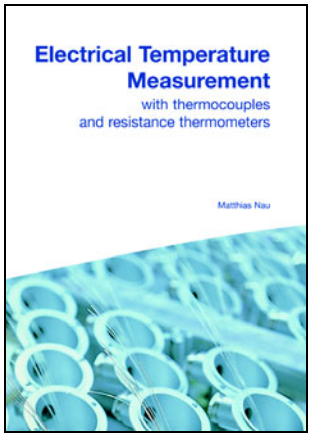

This revised edition takes account of altered standards and recent developments. The new chapter “Measurement uncertainty” incorporates the basic concept of the internationally recognized ISO guideline “Guide to the expression of uncertainty in measurement” (abbreviated: GUM).
In addition, the chapter on explosion protection for thermometers has been updated in view of the European Directive 94/9/EC, which has been in force since 1st July 2003.

August 2002
Publication FAS 146
Sales No. 90/00085081
ISBN: 978-3-935742-07-8

JUMO GmbH & Co. KG
Delivery address: Mackenrodtstraße 14, 36039 Fulda, Germany
Postal address: 36035 Fulda, Germany
Phone: +49 661 6003-0
Fax: +49 661 6003-607
e-mail: mail@jumo.net
Internet: www.jumo.net

JUMO Instrument Co. Ltd.
JUMO House
Temple Bank, Riverway
Harlow, Essex CM20 2DY, UK
Phone: +44 1279 635533
Fax: +44 1279 635262
e-mail: sales@jumo.co.uk
Internet: www.jumo.co.uk

JUMO Process Control, Inc.
8 Technology Boulevard
Canastota, NY 13032, USA
Phone: 315-697-JUMO
1-800-554-JUMO
Fax: 315-697-5867
e-mail: info@jumo.us
Internet: www.jumo.us

Platinum-ceramic temperature sensors to EN 60 751

PK/H style

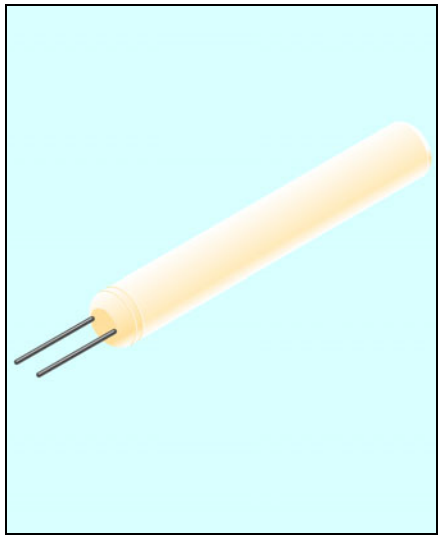

Brief description

PK style platinum-ceramic temperature sensors cover by far the widest temperature range of all platinum temperature sensors. They are the preferred choice for measuring elevated temperatures or for analytical and laboratory applications. Type H temperature sensors are designed for operating temperatures from -200 to +600°C.

The special internal construction of these wirewound temperature sensors largely prevents permanent changes in the resistance value, which may occur in other styles due to significant temperature variations or shock-like temperature changes.

A large selection of different versions is available from JUMO ex-stock. Size, temperature measurement range and tolerance class as well as the number of measurement windings can be chosen as required. Only the nominal value is restricted to 100 ohms, because of the special internal construction of platinum-ceramic temperature sensors in general.

Temperature sensors in blister pack

Temperature sensor				Connecting wire				Sales No. for tolerance class		
Type	R_0/Ω	D	L	Material	D1	L1	R_L in mΩ/mm	1/3 DIN B	A	B
PK 1.1015.1H	1x100	1.0	15	Pd-Au	0.20	10	6	90/00430014	90/00430007	90/00430015
PK 1.1508.1H	1x100	1.5	8	Pd-Au	0.20	10	6	90/00430161	90/00430189	90/00430177
PK 1.1515.1H	1x100	1.5	15	Pd-Au	0.20	10	6	90/00430060	90/00430030	90/00430061
PK 1.1525.1H	1x100	1.5	25	Pd-Au	0.20	10	6	90/00430147	90/00430148	90/00430146
PK 1.2630.1H	1x100	2.6	30	Pd-Au	0.27	10	3	90/00044196	90/00428246	90/00037986
PK 1.3630.1H	1x100	3.6	30	Pd-Au	0.27	10	3	90/00044861	90/00428252	90/00037987
PK 1.4530.1H	1x100	4.5	30	Pd-Au	0.27	10	3	90/00044199	90/00428256	90/00037988
PK 2.1725.1H	2x100	1.7	25	Pd-Au	0.20	10/11	6	90/00430198	90/00430199	90/00430196
PK 2.2630.1H	2x100	2.6	30	Pd-Au	0.27	10/11	3	90/00061608	90/00429088	90/00061390
PK 2.4530.1H	2x100	4.5	30	Pd-Au	0.27	10/11	3	90/00061609	90/00428311	90/00038293

Dim. tolerances: ΔD = ±0.15 / ΔL = +2/-1 / ΔD1 = ±0.02 / ΔL1 = ±2
Dimensions in mm.

For a definition of the tolerance classes, see Data Sheet 90.6000

Dimensional drawing

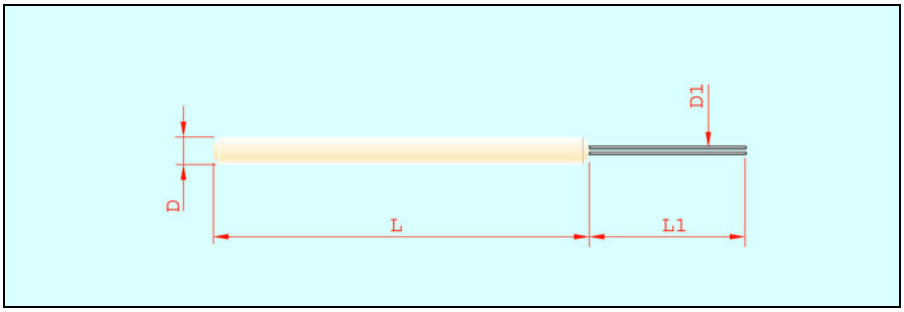

JUMO GmbH & Co. KG
Delivery address: Mackenrodtstraße 14, 36039 Fulda, Germany
Postal address: 36035 Fulda, Germany
Phone: +49 661 6003-0
Fax: +49 661 6003-607
e-mail: mail@jumo.net
Internet: www.jumo.net

JUMO Instrument Co. Ltd.
JUMO House
Temple Bank, Riverway
Harlow, Essex CM20 2DY, UK
Phone: +44 1279 635533
Fax: +44 1279 635262
e-mail: sales@jumo.co.uk
Internet: www.jumo.co.uk

JUMO Process Control, Inc.
8 Technology Boulevard
Canastota, NY 13032, USA
Phone: 315-697-JUMO
1-800-554-JUMO
Fax: 315-697-5867
e-mail: info@jumo.us
Internet: www.jumo.us

Technical data

Standard EN 60 751

Temperature coefficient $\alpha = 3.850 \times 10^{-3}\,°C^{-1}$ (between 0 and 100 °C)

Temperature range -200 to +600 °C

Tolerance

Temperature validity range Class 1/3 DIN B:	- 70 to +250 °C
Temperature validity range Class A:	-200 to +600 °C
Temperature validity range Class B:	-200 to +600 °C

Measuring current recommended: 1.0 mA

Maximum current 20 mA

Operating conditions Platinum-ceramic temperature sensors may not be used unprotected in humid ambient conditions (condensation) or corrosive atmospheres. Because of their special internal construction, the temperature sensors only have a limited resistance to shock and vibration. However, they exhibit excellent temperature stability and are free from hysteresis. The user may have to carry out some checks before operation.

Connecting wires The connecting wires are made of a palladium-gold alloy, 0.27 mm thick. On the versions H 2 x Pt100, the connecting wires of the first measurement winding are longer (L1 +1mm), to mark the individual winding more clearly. Any unnecessary bending of the connecting wires must be avoided, as this may result in material fatigue and a wire break.

Measurement point The nominal value specified refers to the standard connecting wire length L1. The measurement is acquired 2 mm from the open end of the wire. If the wire length is altered, changes in resistance will occur, which may result in the tolerance class not being met.

Long-term stability max. R_0 drift 0.03 %/year (see Data Sheet 90.6000 for definitions)

Insulation resistance >10 MΩ at room temperature

Vibration strength see EN 60 751, Section 4.4.2

Shock resistance see EN 60 751, Section 4.4.1

Self-heating $\Delta t = I^2 \times R \times E$ (see Data Sheet 90.6000 for definitions)

Packaging Blister pack

Storage In the standard packaging, JUMO temperature sensors, PK/H style, can be stored for at least 12 months under normal ambient conditions. It is not permissible to store the sensors in aggressive atmospheres, corrosive media, or in high humidity.

RoHS approved Yes

Self-heating coefficients and response times

Type	Self-heating coefficient E in °C/mW		Response times in seconds			
	in water (v = 0.2 m/sec)	in air (v = 2 m/sec)	in water (v = 0.4 m/sec)		in air (v = 1 m/sec)	
			$t_{0.5}$	$t_{0.9}$	$t_{0.5}$	$t_{0.9}$
PK 1.1015.1H	0.02	0.2	0.2	0.3	3	9
PK 1.1508.1H	0.02	0.2	0.2	0.5	7	22
PK 1.1515.1H	0.02	0.2	0.2	0.4	5	16
PK 1.1525.1H	0.05	0.2	0.2	0.4	6	16
PK 1.2630.1H	0.01	0.05	0.3	0.6	11	34
PK 1.3630.1H	0.01	0.05	0.4	1.0	20	60
PK 1.4530.1H	0.01	0.05	0.4	1.4	26	90
PK 2.1725.1H	0.05	0.2	0.2	0.4	6	19
PK 2.2630.1H	0.02	0.1	0.3	0.6	11	36
PK 2.4530.1H	0.02	0.1	0.4	1.4	27	84

JUMO GmbH & Co. KG
Delivery address: Mackenrodtstraße 14, 36039 Fulda, Germany
Postal address: 36035 Fulda, Germany
Phone: +49 661 6003-0
Fax: +49 661 6003-607
e-mail: mail@jumo.net
Internet: www.jumo.net

JUMO Instrument Co. Ltd.
JUMO House
Temple Bank, Riverway
Harlow, Essex CM20 2DY, UK
Phone: +44 1279 635533
Fax: +44 1279 635262
e-mail: sales@jumo.co.uk
Internet: www.jumo.co.uk

JUMO Process Control, Inc.
8 Technology Boulevard
Canastota, NY 13032, USA
Phone: 315-697-JUMO
1-800-554-JUMO
Fax: 315-697-5867
e-mail: info@jumo.us
Internet: www.jumo.us

Platinum-ceramic temperature sensors to EN 60 751

PK/U style

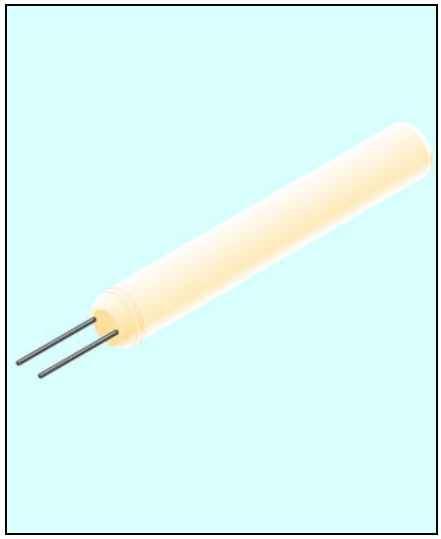

Brief description

PK style platinum-ceramic temperature sensors cover by far the widest temperature range of all temperature sensors. They are the first choice for measuring elevated temperatures or for analytical and laboratory applications. Type U temperature sensors are designed for operating temperatures from -200 to +800°C.

The special internal construction of these wirewound temperature sensors largely prevents permanent changes in the resistance value, which may occur in other styles as a result of significant temperature variations or shock-like temperature changes.

A large selection of different versions is available from JUMO ex-stock. Size, temperature measurement range and tolerance class as well as the number of measurement windings can be chosen as required. Only the nominal value is restricted to 100 ohms, because of the special internal construction of platinum-ceramic temperature sensors in general.

Temperature sensors in blister pack

Temperature sensor				Connecting wire				Sales No. for tolerance class		
Type	R_0/Ω	D	L	Material	D1	L1	R_L in mΩ/mm	1/3 DIN B	A	B
PK 1.0915.1U	1x100	0.9	15	Pt	0.15	7	6	90/00082337	90/00429114	90/00038272
PK 1.1515.1U	1x100	1.5	15	Pt	0.25	7	2	90/00429411	90/00429115	90/00038276
PK 1.1525.1U	1x100	1.5	25	Pt	0.25	7	2	90/00317057	90/00380936	90/00038274
PK 1.2006.1U	1x100	2.0	6	Pt	0.25	7	2	90/00082338	90/00430173	90/00038275
PK 1.2630.1U	1x100	2.6	30	Pt	0.27	10	3	90/00429113	90/00429112	90/00038278
PK 1.4530.1U	1x100	4.5	30	Pt	0.40	7	1	90/00429162	90/00429236	90/00429237
PK 2.1525.1U	2x100	1.5	25	Pt	0.25	7	2	90/00429318	90/00083180	90/00038290
PK 2.2630.1U	2x100	2.6	30	Pt	0.27	10	3	90/00429321	90/00429320	90/00038291

Dim. tolerances: ΔD = ±0.15 / ΔL = +2/-1 / ΔD1 = ±0.02 / ΔL1 = ±2
Dimensions in mm.

For definition of tolerance classes, see Data Sheet 90.6000

Dimensional drawing

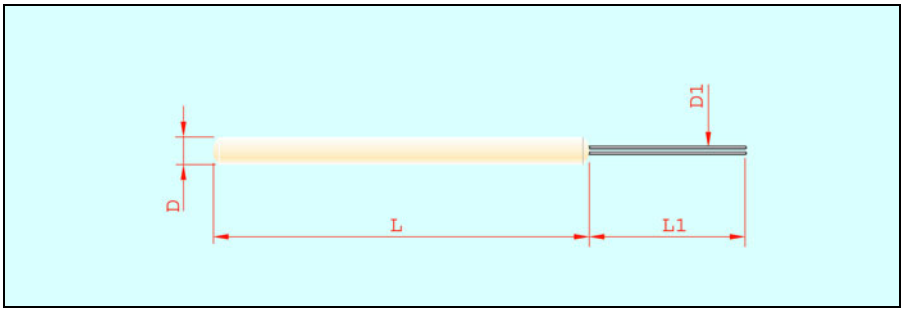

JUMO GmbH & Co. KG
Delivery address: Mackenrodtstraße 14, 36039 Fulda, Germany
Postal address: 36035 Fulda, Germany
Phone: +49 661 6003-0
Fax: +49 661 6003-607
e-mail: mail@jumo.net
Internet: www.jumo.net

JUMO Instrument Co. Ltd.
JUMO House
Temple Bank, Riverway
Harlow, Essex CM20 2DY, UK
Phone: +44 1279 635533
Fax: +44 1279 635262
e-mail: sales@jumo.co.uk
Internet: www.jumo.co.uk

JUMO Process Control, Inc.
8 Technology Boulevard
Canastota, NY 13032, USA
Phone: 315-697-JUMO
1-800-554-JUMO
Fax: 315-697-5867
e-mail: info@jumo.us
Internet: www.jumo.us

Technical data

Standard EN 60 751

Temperature coefficient $\alpha = 3.850 \times 10^{-3}\,°C^{-1}$ (between 0 and 100 °C)

Temperature range -200 to +800 °C

Tolerance

Temperature validity range Class 1/3 DIN B:	- 70 to +250 °C
Temperature validity range Class A:	-200 to +600 °C
Temperature validity range Class B:	-200 to +800 °C

Measuring current recommended: 1.0 mA

Maximum current 20 mA

Operating conditions Platinum-ceramic temperature sensors may not be used unprotected in humid environments (condensation) or corrosive atmospheres. Because of their special internal construction, the temperature sensors only have a limited resistance to shock and vibration. However, they exhibit excellent temperature stability and are free from hysteresis. The user may have to carry out some checks before operation.

Connecting wires The connecting wires are made from pure platinum and may have different wire lengths and thicknesses. Any unnecessary bending of the connecting wires must be avoided as this may result in material fatigue and a wire break.

Measurement point The nominal value specified refers to the standard connecting wire length L1. The measurement is acquired 2 mm from the open end of the wire. If the wire length is altered, changes in resistance will occur which may result in the tolerance class not being met.

Long-term stability max. R_0 drift 0.03 %/year (see Data Sheet 90.6000 for definitions)

Insulation resistance >100 MΩ at room temperature

Vibration strength see EN 60 751, Section 4.4.2

Shock resistance see EN 60 751, Section 4.4.1

Self-heating $\Delta t = I^2 \times R \times E$ (see Data Sheet 90.6000 for definitions)

Packaging Blister pack

Storage In the standard packaging, JUMO temperature sensors, PK/U style, can be stored for at least 12 months under normal ambient conditions. It is not permissible to store the sensors in aggressive atmospheres, corrosive media, or in high humidity.

RoHS approved Yes

Self-heating coefficients and response times

Type	Self-heating coefficient E in °C/mW		Response times in seconds			
	in water (v = 0.2 m/sec)	in air (v = 2 m/sec)	in water (v = 0.4 m/sec)		in air (v = 1 m/sec)	
			$t_{0.5}$	$t_{0.9}$	$t_{0.5}$	$t_{0.9}$
PK 1.0915.1U	0.02	0.2	0.1	0.2	7	22
PK 1.1515.1U	0.02	0.2	0.2	0.4	3	9
PK 1.1525.1U	0.05	0.2	0.2	0.4	5	16
PK 1.2006.1U	0.02	0.2	0.2	0.5	5	14
PK 1.2630.1U	0.01	0.05	0.3	0.6	11	34
PK 1.4530.1U	0.01	0.05	0.4	1.4	26	90
PK 2.1525.1U	0.02	0.05	0.2	0.4	6	19
PK 2.2630.1U	0.05	0.1	0.3	0.6	11	36

JUMO GmbH & Co. KG
Delivery address: Mackenrodtstraße 14, 36039 Fulda, Germany
Postal address: 36035 Fulda, Germany
Phone: +49 661 6003-0
Fax: +49 661 6003-607
E-mail: mail@jumo.net
Internet: www.jumo.net

JUMO Instrument Co. Ltd.
JUMO House
Temple Bank, Riverway
Harlow - Essex CM20 2DY, UK
Phone: +44 1279 63 55 33
Fax: +44 1279 63 52 62
E-mail: sales@jumo.co.uk
Internet: www.jumo.co.uk

JUMO Process Control, Inc.
8 Technology Boulevard
Canastota, NY 13032, USA
Phone: 315-697-JUMO
1-800-554-JUMO
Fax: 315-697-5867
E-mail: info@jumo.us
Internet: www.jumo.us

Application Notes for Platinum-Chip Temperature Sensors

1 Introduction

Thin-film platinum-chip temperature sensors from JUMO are basically formed from a ceramic substrate on which a thinly structured layer of platinum is applied. A glass layer seals off the platinum layer and thus protects the temperature sensor to a certain extent from chemical and mechanical influences.
During subsequent fabrication, the materials that are used, and the type and method of the processing, have a decisive effect on the functionality and long-term stability of the temperature sensors. In specific cases it may be necessary to carry out qualification tests for the selected design, to ensure that technical specifications for measurement accuracy are met over the temperature range of the application.
The following application notes have been put together by JUMO as a result of many years of experience in processing and handling platinum-chip temperature sensors, and are to be taken as recommendations.

2 Mechanical strength of the connecting wires

2.1 PCA series

The connecting wires of the temperature sensors can be subjected to the maximum tensions shown below, without the functionality being affected. Ensure that the wires are not loaded laterally. Please refer to the table for the maximum admissible horizontal tensile load on one individual wire.

Sensor	Connection	Tension
L	Ag-wire	5N
S	Pt-Ni sheathed wire	10N
M	Pt-Ni sheathed wire	10N
H	Pd-wire	6N
E	Ni-wire	6N

If the connecting wires have to be bent, then care must be taken that the bend is not made directly at the point where the connecting wire enters the component sealing. If necessary, use a suitable tool to keep the mechanical stress away from this point. Continuous force on the connecting wires, or tight bends (kinking) must also be avoided, since this not only increases the resistance (leading to a systematically higher temperature indication) but also makes the wires fragile and liable to break under temperature stress.

2.2 PCKL series

These temperature sensors have terminal clamps which are soldered on and especially stiff. It is therefore particularly important that the connections are not subjected to a sideways loading during processing. The maximum permissible horizontal tension is 10 newtons per terminal clamp. Bending or kinking of the terminal clamps is not permissible.

3 Connection methods

Basically, the connecting wires of the temperature sensors can be fabricated with all the usual connection methods.
These are: soft soldering, brazing, crimping, resistance welding and laser welding.
In practice, the relevant parameters for a good connection vary according to the type of wire used (see data sheet). It is therefore advisable to make some test welds to obtain the best results.
During welding or soldering, care must be taken that there is no concentrated local heating of the sealing points of the connecting wires. If this occurs, the differences in thermal expansion of the materials can lead to strains or cracks and thus failure at some later time. Furthermore, the maximum operating temperature of the temperature sensors must not be exceeded during handling and processing. It is recommended that a heat shunt or similar tool is used to prevent excessive heat reaching the temperature sensor via the connecting wires.
Please also note that the nominal values given are valid for the standard lengths of connecting wires, whereby the point of measurement is always 2 mm from the open end of the connecting wires. Alteration to the length of the connecting wires will therefore change the resistance. This may have the result that the tolerance class limits are no longer met.

4 Mounting and installation

4.1 Handling

Soft plastic clamps or tweezers should be used for handling temperature sensors. Metal pliers or coarse gripping/clamping devices can cause damage to the temperature sensors.

4.2 Potting, coating and gluing

During production processing of platinum-chip temperature sensors, it is important to avoid any mechanical stresses between the temperature sensor and the potting compound or casting resin, which can arise from the difference between the coefficients of thermal expansion of the various materials that are used. It is therefore advantageous to use potting compounds that retain some elasticity after hardening. If not, it cannot be ruled out that signal shifts may occur, or even a total failure of the temperature sensor in extreme cases. Potting compounds and adhesives should therefore be qualified by testing before being used for series production. For instance, we recommend temperature cycling over the intended temperature range of the application. Care must also be taken that the potting or coating compounds provide electrical insulation and are chemically neutral with regard to the temperature sensor (ceramic substrate material [Al_2O_3] and various glass materials).
The upper operating limit for the temperature sensor must also not be exceeded during the drying/hardening process. When the temperature sensor is placed in the protection tube and positioned, care must be taken that there is sufficient clearance between the sensor and the wall of the tube. If the sensor is skewed or fitted too tightly, it may be damaged.

4.3 Surface mounting

Platinum-chip temperature sensors can be affixed to flat surfaces by using various types of (SMD) adhesive, or double-sided adhesive tapes. The usual curing/hardening methods with UV radiation and/or heat do not create critical stresses for the sensors. The notes of 4.2 must be observed.

4.4 Unprotected application

The sealing (glass covering) and connecting wires of the sensors may be damaged if they are exposed to a corrosive atmosphere, especially in conjunction with moisture. Platinum-chip temperature sensors should therefore not be used in such an environment without protection.
If bare sensors cannot be avoided, for instance in HVAC applications, then we recommend using our M series, or sensors that have been sealed by an additional protective coating. In this case, it is absolutely vital that the user carries out an appropriate qualification test of the functionality and operating life.

5 Thermal characteristics

5.1 Response times

JUMO measures the response times of the platinum-chip temperature sensors in agitated water with a flow velocity of v = 0.4 meters/second, and the average values are: $t_{0.5}$ = 0.2 sec and $t_{0.9}$ = 0.4 sec.
Subsequent fabrication, such as installation in a protection tube, will increase the response times, depending on the nature and mass of the materials that are used. Care must therefore be taken to ensure good heat transfer between the temperature sensor and the protection tube. Heat-conductive pastes and alumina powder have proved suitable as heat-conducting materials.

5.2 Self-heating

In order to measure the electrical resistance, a current must flow through the temperature sensor. This current will heat up the temperature sensors by an amount that can be larger or smaller, depending on external factors.
The size of the resulting error caused by this self-heating depends on the applied power $P = I^2 \times R$, the amount of heat that is removed by the medium being measured, the heat capacity of the temperature sensor and its surface. These specific characteristics are combined in the self-heating coefficient E, so that the error caused by self-heating is given by $\Delta t = I^2 \times R \times E$.
Self-heating coefficients of platinum-chip temperature sensors are measured in air at v = 2 m/sec and agitated water at v = 0.2 m/

JUMO GmbH & Co. KG
Delivery address: Mackenrodtstraße 14, 36039 Fulda, Germany
Postal address: 36035 Fulda, Germany
Phone: +49 661 6003-0
Fax: +49 661 6003-607
E-mail: mail@jumo.net
Internet: www.jumo.net

JUMO Instrument Co. Ltd.
JUMO House
Temple Bank, Riverway
Harlow - Essex CM20 2DY, UK
Phone: +44 1279 63 55 33
Fax: +44 1279 63 52 62
E-mail: sales@jumo.co.uk
Internet: www.jumo.co.uk

JUMO Process Control, Inc.
8 Technology Boulevard
Canastota, NY 13032, USA
Phone: 315-697-JUMO
1-800-554-JUMO
Fax: 315-697-5867
E-mail: info@jumo.us
Internet: www.jumo.us

sec. The average coefficients are: in air 0.2 °C/mW, in water 0.02 °C/mW.
Precise details on items 5.1 and 5.2 can be found in the appropriate data sheets.

5.3 Measuring current

To avoid self-heating effects and possible damage to the temperature sensors, we recommend the following maximum currents:
≤ 1.0 mA for Pt100 temperature sensors, ≤ 0.7 mA for Pt500 temperature sensors, and ≤ 0.1 mA for Pt1000 temperature sensors.

6 Cleaning

JUMO temperature sensors come ready-cleaned from the factory. Further cleaning is not normally required. However, if additional cleaning operations are necessary during processing, then the sensors can be cleaned in baths containing mild cleaning agents, such as ethanol. A quick cleaning by ultrasonics is also permissible.

7 Storage

In the (standard) belt packaging, JUMO temperature sensors can be stored for several months in a normal environment. But storage in a corrosive atmosphere or corrosive medium or under high-humidity conditions is not permissible.

8 Delivered quality

The electrical characteristics of JUMO temperature sensors are 100% tested in accordance with EN 60 751 during manufacture, with a measurement uncertainty of 0.030 °C (95% confidence interval) for the tolerance classes.
The testing procedure includes the mechanical strength of the connecting wires and the conformity to dimensional tolerances. After the tolerance selection and cleaning, all (standard) temperature sensors are individually belt-packaged and stored for dispatch. High quality, comprehensive information and fast delivery capability are just a few of the advantages of using JUMO temperature sensors.

JUMO GmbH & Co. KG
Delivery address: Mackenrodtstraße 14
36039 Fulda, Germany
Postal address: 36035 Fulda, Germany
Phone: +49 661 6003-0
Fax: +49 661 6003-607
Email: mail@jumo.net
Internet: www.jumo.net

JUMO Instrument Co. Ltd.
JUMO House
Temple Bank, Riverway
Harlow, Essex, CM20 2DY, UK
Phone: +44 1279 63 55 33
Fax: +44 1279 62 50 29
Email: sales@jumo.co.uk
Internet: www.jumo.co.uk

JUMO Process Control, Inc.
6733 Myers Road
East Syracuse, NY 13057, USA
Phone: +1 315 437 5866
Fax: +1 315 437 5860
Email: info.us@jumo.net
Internet: www.jumousa.com

Platinum-chip temperature sensors with connection wires according to DIN EN 60751:2009 / IEC 60751:2008

- For temperatures from -70 to +600 °C
- Standardized nominal values and tolerances
- Resistance values from 20 to 2000 Ω
- Linear characteristic curve
- Quick response behavior
- Good vibration resistance
- Affordable

Introduction

Platinum-chip temperature sensors belong to the category of thin-film technology temperature sensors. They are produced by JUMO using the latest state-of-the-art technology under clean-room conditions. The platinum layer acting as the active layer is applied to a ceramic body in a sputter process and subsequently given a meander-structure in a lithographic process. Fine adjustment is then carried out in a laser trimming process. To protect the sensor against external influences and to provide insulation, the platinum meander is coated with a special glass layer once the adjustment is completed. The electrical connection is made by connection wires welded onto the contact surfaces. Depending on the version, the connection wires can be made of different materials, while their length and diameter can also vary to a certain extent. An additional glass layer applied to the contact surface fastens the connection wires and also acts as a strain relief.
Platinum-chip temperature sensors with the PCA design type are available ex works in various versions as Pt100, Pt500, or Pt1000 temperature sensors. Special nominal values can be manufactured upon request. Platinum-chip temperature sensors are also available in small sizes with high ohmic load. Their low net weight allows very fast response times. When installed as fixed units, they also provide excellent vibration resistance. The operating temperature depends on the respective version and, in normal cases, ranges from -70 to +600 °C. When accepting certain nominal value offsets and/or hysteresis effects that occur within specific limits, these platinum-chip temperature sensors can also be used for temperatures well below -70 °C.
For most temperature applications required by the market, platinum-chip temperature sensors are used as an active component for temperature acquisition. They are typically used in the following industries: heating, ventilation, and air-conditioning technology, medical and laboratory technology, white goods, automobiles and commercial vehicles, as well as mechanical and industrial engineering.

JUMO platinum temperature sensors

Construction and application of platinum temperature sensors	Data sheet 906000
Platinum-ceramic temperature sensors	Data sheet 906022
Platinum-chip temperature sensors with connection wires	Data sheet 906121
Platinum-chip temperature sensors on circuit boards	Data sheet 906122
Platinum-chip temperature sensors with terminal clamps	Data sheet 906123
Platinum-chip temperature sensors in SMD design type	Data sheet 906125

Design type PCA

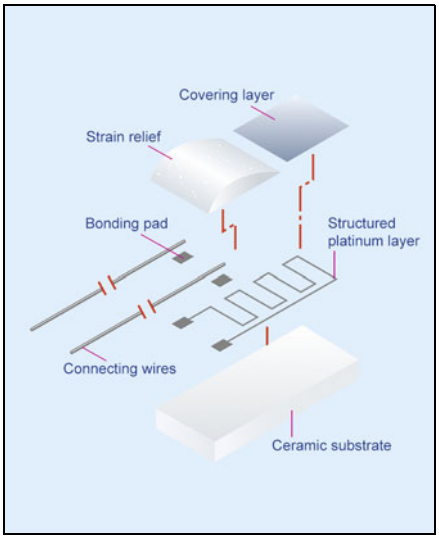

Technical literature

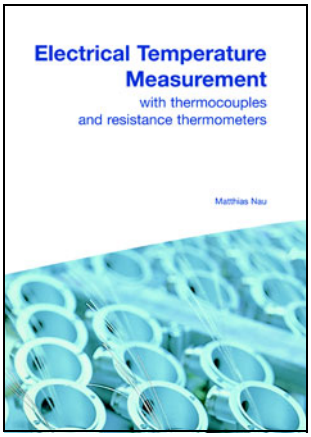

The revised version of this book was reviewed due to changed standards and further developments. The principle of the internationally approved "Guide of the expression of uncertainty in measurement" (abbreviated: GUM) ISO guide is particularly conveyed by the new chapter "Measurement uncertainty". In addition, a chapter on explosion protection for thermometers has been added.

August 2002
Publication FAS 146
Part no.: 00085081
ISBN: 3-935742-07-X

JUMO GmbH & Co. KG
Delivery address: Mackenrodtstraße 14
36039 Fulda, Germany
Postal address: 36035 Fulda, Germany
Phone: +49 661 6003-0
Fax: +49 661 6003-607
Email: mail@jumo.net
Internet: www.jumo.net

JUMO Instrument Co. Ltd.
JUMO House
Temple Bank, Riverway
Harlow, Essex, CM20 2DY, UK
Phone: +44 1279 63 55 33
Fax: +44 1279 62 50 29
Email: sales@jumo.co.uk
Internet: www.jumo.co.uk

JUMO Process Control, Inc.
6733 Myers Road
East Syracuse, NY 13057, USA
Phone: +1 315 437 5866
Fax: +1 315 437 5860
Email: info.us@jumo.net
Internet: www.jumousa.com

Platinum-chip temperature sensors with nickel connection wires (gold-plated) according to DIN EN 60751:2009 / IEC 60751:2008

Design type PCA/EG

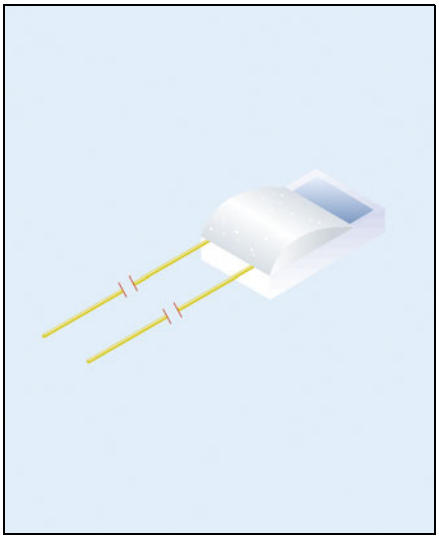

Brief description

Platinum-chip temperature sensors are based on a temperature-dependent resistance, the curve and admissible tolerance of which are defined in the international IEC 60751:2008 standard. They combine the favorable features of platinum temperature sensors with the advantages of large-scale production. They are characterized by standardization and universal interchangeability as well as high measuring accuracy, excellent long-term stability, and good reproducibility of the electric features. Demand for large quantities has led to a notable price reduction over the last few years. For this reason, platinum-chip temperature sensors are also a real alternative to thermistors based on the principle of semi-conductors in terms of pricing.
Platinum-chip temperature sensors in the version "EG" can be universally used and are suitable for a wide range of applications in low and higher temperature ranges up to 500 °C. Short-term use of the sensors at up to 550 °C is admissible. The gold-plated connection wires are suitable for all common connection technologies: welding, soldering, and crimping. The operating temperature range is -70 to +500 °C.

Item overview

Temperature sensor						Connection wire				Part no. for tolerance class			
Type	R_0/Ω	B	L	H	S	Material	D1	L1	R_L in mΩ/mm	F0.1 (Class AA)	F0.15 (Class A)	F0.3 (Class B)	F0.6 (Class 2B)
PCA 1.1505.1EG	1×100	1.5	5.0	1.0	0.38	NiAu	0.20	10	2.4	00693656F	00693654F	00693651F	Upon request
PCA 1.1505.10EG	1×1000	1.5	5.0	1.0	0.38	NiAu	0.20	10	2.4	00693663F	00693662F	00693658F	Upon request
PCA 1.2003.1EG	1×100	2.0	2.5	1.3	0.64	NiAu	0.20	10	2.4	00692526F	00663905F	00663850F	Upon request
PCA 1.2003.10EG	1×1000	2.0	2.5	1.3	0.64	NiAu	0.20	10	2.4	00692528F	00692527F	00665252F	Upon request
PCA 1.2005.1EG	1×100	2.0	5.0	1.3	0.64	NiAu	0.20	10	2.4	00692062F	00692061F	00692053F	Upon request
PCA 1.2005.10EG	1×1000	2.0	5.0	1.3	0.64	NiAu	0.20	10	2.4	00691992F	00691986F	00691984F	Upon request

Dimension tolerances:
ΔB = ±0.2 / ΔL = ±0.5 / ΔH = ±0.2 / ΔS = ±0.1 / ΔD1 = ±0.01 / ΔL1 = ±0.5
Dimensions in mm.

Definition of tolerance classes
see data sheet 906000
"F" = Folding box (blister)

JUMO GmbH & Co. KG
Delivery address: Mackenrodtstraße 14
36039 Fulda, Germany
Postal address: 36035 Fulda, Germany
Phone: +49 661 6003-0
Fax: +49 661 6003-607
Email: mail@jumo.net
Internet: www.jumo.net

JUMO Instrument Co. Ltd.
JUMO House
Temple Bank, Riverway
Harlow, Essex, CM20 2DY, UK
Phone: +44 1279 63 55 33
Fax: +44 1279 62 50 29
Email: sales@jumo.co.uk
Internet: www.jumo.co.uk

JUMO Process Control, Inc.
6733 Myers Road
East Syracuse, NY 13057, USA
Phone: +1 315 437 5866
Fax: +1 315 437 5860
Email: info.us@jumo.net
Internet: www.jumousa.com

Dimensional drawing

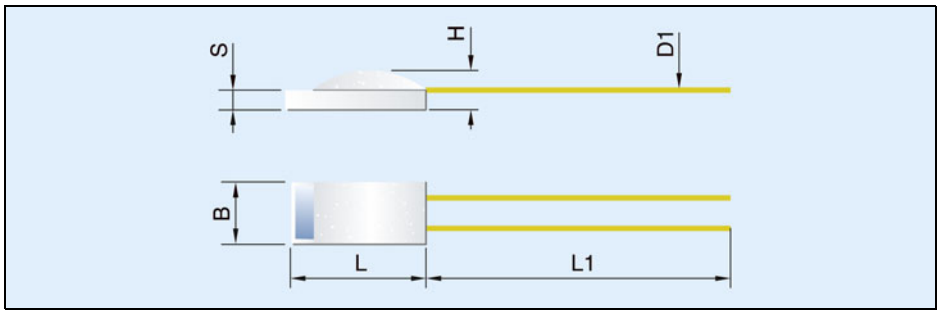

Technical data for type PCA/EG

Standard	DIN EN 60751:2009 / IEC 60751:2008
Temperature coefficient	$\alpha = 3.850 \times 10^{-3}$ °C^{-1} (between 0 and 100 °C)
Temperature range	-70 to +500 °C (temporarily 550 °C)
Tolerance	Temperature validity range, class F0.1 (class AA): -50 to +200 °C Temperature validity range, class F0.15 (class A): -70 to +300 °C Temperature validity range, class F0.3 (class B): -70 to +500 °C Temperature validity range, class F0.6 (class 2B): -70°to +500 °C
Measuring/maximum current	Pt100 recommended 1.0 mA, maximum 7 mA Pt500 recommended 0.7 mA, maximum 3 mA Pt1000 recommended 0.1 mA, maximum 1 mA
Operating conditions	Platinum-chip temperature sensors must be protected when used in a humid environment or in aggressive atmospheres. Direct immersion into liquids is also not admissible. The user may have to carry out some checks before using the sensors. **Please also refer to the installation instructions B 906121.4 "Information for the application of platinum-chip temperature sensors."**
Connection wires	These temperature sensors are equipped with connection wires made of gold-plated pure nickel wire. The connection wires are suitable for welded, soldered, and crimp connections. During further assembly work, it is essential to avoid exerting lateral pressure loads on the connections. Ensure that the horizontal traction on individual connection wires does not exceed 8 N. Avoid unnecessary bending of the connection wires because this will weaken the material and could lead to the connection wires breaking. Please also refer to point 3 "Connection techniques" in our installation instructions. Longer connection wires (up to a length of 300 mm, in one piece) can also be fitted as an optional extra. Extension wires or insulated stranded wires in any lengths can also be fitted later as an alternative to this. In this case, however, take into account that this may result in restrictions concerning the operating temperature.
Measuring point	The specified nominal value relates to the standard connection wire length L1. The measured value is taken 2 mm in front of the open wire end. Changes to the wire length will lead to changes in the resistance, which may mean the tolerance class is no longer met.
Long-term stability	Max. R_0 drift 0.05 % per year (for definition, see data sheet 906000)
Low-temperature application	Taking into account a nominal value drift and hysteresis effect that occur to a certain extent, temperature measurements down to -200 °C are also possible. Further details are available upon request.
Insulation resistance	> 10 MΩ at room temperature
Self-heating	$\Delta t = I^2 \times R \times E$ (for definition, see data sheet 906000)
Packaging	Standard packaging: folding box (blister), packaging unit: 100 pieces, loose Blister belt: upon request Cardboard box: temperature sensors with connection wires > 30 mm On tape (on foil): upon request, over- or under-delivery ±3 %
Storage	In the standard or belt packaging option, JUMO temperature sensors in design type PCA/EG can be stored for at least 12 months under normal ambient conditions. It is not admissible to store the sensors in aggressive atmospheres, corrosive media, or in high humidity.
Compliant with RoHS 2011/65/EU and 2015/863/EU	Yes
Compliant with REACH 1907/2006	Yes

JUMO GmbH & Co. KG
Delivery address: Mackenrodtstraße 14
36039 Fulda, Germany
Postal address: 36035 Fulda, Germany
Phone: +49 661 6003-0
Fax: +49 661 6003-607
Email: mail@jumo.net
Internet: www.jumo.net

JUMO Instrument Co. Ltd.
JUMO House
Temple Bank, Riverway
Harlow, Essex, CM20 2DY, UK
Phone: +44 1279 63 55 33
Fax: +44 1279 62 50 29
Email: sales@jumo.co.uk
Internet: www.jumo.co.uk

JUMO Process Control, Inc.
6733 Myers Road
East Syracuse, NY 13057, USA
Phone: +1 315 437 5866
Fax: +1 315 437 5860
Email: info.us@jumo.net
Internet: www.jumousa.com

Self-heating coefficients and response times for type PCA/EG

Type	Self-heating coefficient E in K/mW		Response times in seconds			
	Water (v = 0.2 m/s)	Air (v = 2 m/s)	In water (v = 0.4 m/s)		In air (v = 1 m/s)	
			$t_{0.5}$	$t_{0.9}$	$t_{0.5}$	$t_{0.9}$
PCA 1.1505.1EG	0.02	0.2	0.1	0.3	3	8
PCA 1.1505.10EG	0.02	0.2	0.1	0.3	3	8
PCA 1.2003.1EG	0.02	0.2	0.1	0.3	3	9
PCA 1.2003.10EG	0.02	0.2	0.1	0.3	3	9
PCA 1.2005.1EG	0.02	0.2	0.1	0.3	3	9
PCA 1.2005.10EG	0.02	0.2	0.1	0.3	3	9

JUMO GmbH & Co. KG
Delivery address: Mackenrodtstraße 14
36039 Fulda, Germany
Postal address: 36035 Fulda, Germany
Phone: +49 661 6003-0
Fax: +49 661 6003-607
Email: mail@jumo.net
Internet: www.jumo.net

JUMO Instrument Co. Ltd.
JUMO House
Temple Bank, Riverway
Harlow, Essex, CM20 2DY, UK
Phone: +44 1279 63 55 33
Fax: +44 1279 62 50 29
Email: sales@jumo.co.uk
Internet: www.jumo.co.uk

JUMO Process Control, Inc.
6733 Myers Road
East Syracuse, NY 13057, USA
Phone: +1 315 437 5866
Fax: +1 315 437 5860
Email: info.us@jumo.net
Internet: www.jumousa.com

Platinum-chip temperature sensors with nickel connection wires according to DIN EN 60751:2009 / IEC 60751:2008

Design type PCA/E

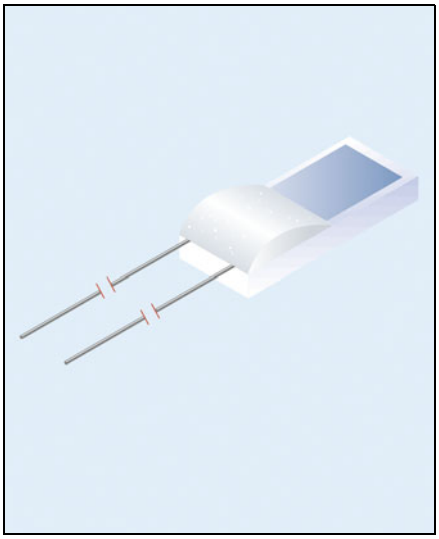

Brief description

Platinum-chip temperature sensors are based on a temperature-dependent resistance, the curve and admissible tolerance of which are defined in the international IEC 60751:2008 standard. They combine the favorable features of platinum temperature sensors with the advantages of large-scale production. They are characterized by standardization and universal interchangeability as well as high measuring accuracy, excellent long-term stability, and good reproducibility of the electric features. Demand for large quantities has led to a notable price reduction over the last few years. For this reason, platinum-chip temperature sensors are also a real alternative to thermistors based on the principle of semi-conductors in terms of pricing.
Platinum-chip temperature sensors in the version "E" can be universally used and are suitable for a wide range of applications in low and higher temperature ranges up to 500 °C. Short-term use of the sensors at up to 550 °C is admissible. The metallically bare connection wires are particularly suitable for an electrical connection based on welded or hard-soldered joints. Soft-soldered joints are possible under certain circumstances. The operating temperature range is -70 to +500 °C.

Item overview

Temperature sensor						Connection wire				Part no. for tolerance class			
Type	R_0/Ω	B	L	H	S	Material	D1	L1	R_L in mΩ/mm	F0.1 (Class AA)	F0.15 (Class A)	F0.3 (Class B)	F0.6 (Class 2B)
PCA 1.1505.1E	1×100	1.5	5.0	1.0	0.38	Ni	0.20	10	2.4	00623306F	00623291F	00622624F	Upon request
PCA 1.2003.1E	1×100	2.0	2.5	1.3	0.64	Ni	0.20	10	2.4	00596146F	00596145F	00596142F	Upon request
PCA 1.2003.1E	1×100	2.0	2.5	1.3	0.64	Ni	0.20	75	2.4	Upon request	Upon request	00592657P	Upon request
PCA 1.2005.1E	1×100	2.0	5.0	1.3	0.64	Ni	0.20	10	2.4	00524128F	00524127F	00524126F	00588807O
PCA 1.2005.1E	1×100	2.0	5.0	1.3	0.64	Ni	0.25	55	1.3	Upon request	Upon request	00579512P	-
PCA 1.2005.5E	1×500	2.0	5.0	1.3	0.64	Ni	0.20	10	2.4	Upon request	Upon request	Upon request	Upon request
PCA 1.2005.10E	1×1000	2.0	5.0	1.3	0.64	Ni	0.20	10	2.4	00524129F	00524130F	00527856F	Upon request
PCA 1.2005.10E	1×1000	2.0	5.0	1.3	0.64	Ni	0.25	55	1.3	Upon request	Upon request	00517230P	Upon request

Dimension tolerances:
ΔB = ±0.2 / ΔL = ±0.5 / ΔH = ±0.2 / ΔS = ±0.1 / ΔD1 = ±0.01 / ΔL1 = ±0.5
Dimensions in mm.

Definition of tolerance classes
see data sheet 906000
"F" = Folding box (blister)
"O" = On tape (on foil)
"P" = Cardboard box for sensors
with connection wires > 30 mm

JUMO GmbH & Co. KG
Delivery address: Mackenrodtstraße 14
36039 Fulda, Germany
Postal address: 36035 Fulda, Germany
Phone: +49 661 6003-0
Fax: +49 661 6003-607
Email: mail@jumo.net
Internet: www.jumo.net

JUMO Instrument Co. Ltd.
JUMO House
Temple Bank, Riverway
Harlow, Essex, CM20 2DY, UK
Phone: +44 1279 63 55 33
Fax: +44 1279 62 50 29
Email: sales@jumo.co.uk
Internet: www.jumo.co.uk

JUMO Process Control, Inc.
6733 Myers Road
East Syracuse, NY 13057, USA
Phone: +1 315 437 5866
Fax: +1 315 437 5860
Email: info.us@jumo.net
Internet: www.jumousa.com

Dimensional drawing

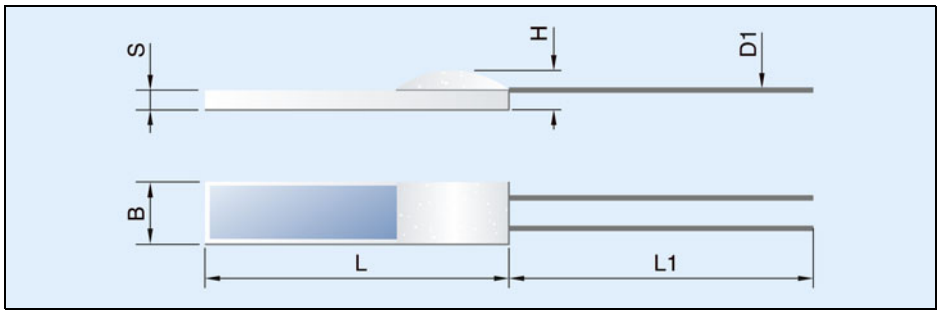

Technical data for type PCA/E

Standard	DIN EN 60751:2009 / IEC 60751:2008
Temperature coefficient	$\alpha = 3.850 \times 10^{-3}$ °C^{-1} (between 0 and 100 °C)
Temperature range	-70 to +500 °C (temporarily 550 °C)
Tolerance	Temperature validity range, class F0.1 (class AA): -50 to +200 °C Temperature validity range, class F0.15 (class A): -70 to +300 °C Temperature validity range, class F0.3 (class B): -70 to +500 °C Temperature validity range, class F0.6 (class 2B): -70°to +500 °C
Measuring/maximum current	Pt100 recommended 1.0 mA, maximum 7 mA Pt500 recommended 0.7 mA, maximum 3 mA Pt1000 recommended 0.1 mA, maximum 1 mA
Operating conditions	Platinum-chip temperature sensors must be protected when used in a humid environment or in aggressive atmospheres. Direct immersion into liquids is also not admissible. The user may have to carry out some checks before using the sensors. **Please also refer to the installation instructions B 906121.4 "Information for the application of platinum-chip temperature sensors."**
Connection wires	These temperature sensors are equipped with connection wires made of pure nickel wire. The connection wires are suitable for welded and soft-soldered/hard-soldered joints. During further assembly work, it is essential to avoid exerting lateral pressure loads on the connections. Ensure that the horizontal traction on individual connection wires does not exceed 6 N. Avoid unnecessary bending of the connection wires because this will weaken the material and could lead to the connection wires breaking. Please also refer to point 3 "Connection techniques" in our installation instructions. Longer connection wires (up to a length of 300 mm, in one piece) can also be fitted as an optional extra. Extension wires or insulated stranded wires in any lengths can also be fitted later as an alternative to this. In this case, however, take into account that this may result in restrictions concerning the operating temperature.
Measuring point	The specified nominal value relates to the standard connection wire length L1. The measured value is taken 2 mm in front of the open wire end. Changes to the wire length will lead to changes in the resistance, which may mean the tolerance class is no longer met.
Long-term stability	Max. R_0 drift 0.05 % per year (for definition, see data sheet 906000)
Low-temperature application	Taking into account a nominal value drift and hysteresis effect that occur to a certain extent, temperature measurements down to -200 °C are also possible. Further details are available upon request.
Insulation resistance	> 10 MΩ at room temperature
Self-heating	$\Delta t = I^2 \times R \times E$ (for definition, see data sheet 906000)
Packaging	Standard packaging: folding box (blister), packaging unit: 100 pieces, loose Blister belt: upon request Cardboard box: temperature sensors with connection wires > 30 mm On tape (on foil): upon request, over- or under-delivery ±3 %
Storage	In the standard or belt packaging option, JUMO temperature sensors in design type PCA/E can be stored for at least 12 months under normal ambient conditions. It is not admissible to store the sensors in aggressive atmospheres, corrosive media, or in high humidity.
Compliant with RoHS 2011/65/EU and 2015/863/EU	Yes
Compliant with REACH 1907/2006	Yes

JUMO GmbH & Co. KG
Delivery address: Mackenrodtstraße 14
36039 Fulda, Germany
Postal address: 36035 Fulda, Germany
Phone: +49 661 6003-0
Fax: +49 661 6003-607
Email: mail@jumo.net
Internet: www.jumo.net

JUMO Instrument Co. Ltd.
JUMO House
Temple Bank, Riverway
Harlow, Essex, CM20 2DY, UK
Phone: +44 1279 63 55 33
Fax: +44 1279 62 50 29
Email: sales@jumo.co.uk
Internet: www.jumo.co.uk

JUMO Process Control, Inc.
6733 Myers Road
East Syracuse, NY 13057, USA
Phone: +1 315 437 5866
Fax: +1 315 437 5860
Email: info.us@jumo.net
Internet: www.jumousa.com

Self-heating coefficients and response times for type PCA/E

Type	Self-heating coefficient E in K/mW		Response times in seconds			
	Water (v = 0.2 m/s)	Air (v = 2 m/s)	In water (v = 0.4 m/s)		In air (v = 1 m/s)	
			$t_{0.5}$	$t_{0.9}$	$t_{0.5}$	$t_{0.9}$
PCA 1.1505.1E	0.02	0.2	0.1	0.3	3	8
PCA 1.2003.1E	0.02	0.2	0.1	0.3	3	9
PCA 1.2005.1E	0.02	0.2	0.1	0.3	3	9
PCA 1.2005.5E	0.02	0.2	0.1	0.3	3	9
PCA 1.2005.10E	0.02	0.2	0.1	0.3	3	9

JUMO GmbH & Co. KG
Delivery address: Mackenrodtstraße 14
36039 Fulda, Germany
Postal address: 36035 Fulda, Germany
Phone: +49 661 6003-0
Fax: +49 661 6003-607
Email: mail@jumo.net
Internet: www.jumo.net

JUMO Instrument Co. Ltd.
JUMO House
Temple Bank, Riverway
Harlow, Essex, CM20 2DY, UK
Phone: +44 1279 63 55 33
Fax: +44 1279 62 50 29
Email: sales@jumo.co.uk
Internet: www.jumo.co.uk

JUMO Process Control, Inc.
6733 Myers Road
East Syracuse, NY 13057, USA
Phone: +1 315 437 5866
Fax: +1 315 437 5860
Email: info.us@jumo.net
Internet: www.jumousa.com

Platinum-chip temperature sensors with nickel connection wires (gold-plated) according to DIN EN 60751:2009 / IEC 60751:2008

Design type PCA/ER and EBR

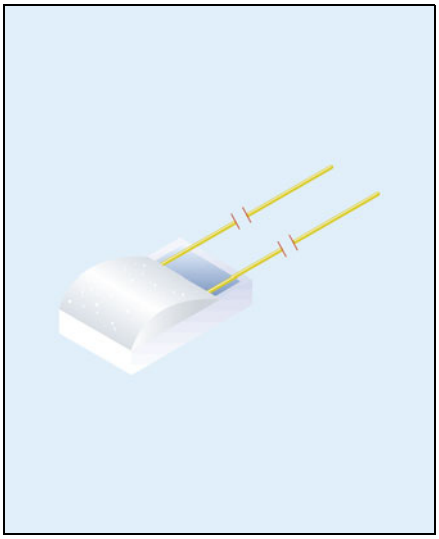

Brief description

Platinum-chip temperature sensors are based on a temperature-dependent resistance, the curve and admissible tolerance of which are defined in the international IEC 60751:2008 standard. They combine the favorable features of platinum temperature sensors with the advantages of large-scale production. They are characterized by standardization and universal interchangeability as well as high measuring accuracy, excellent long-term stability, and good reproducibility of the electric features. Demand for large quantities has led to a notable price reduction over the last few years. For this reason, platinum-chip temperature sensors are also a real alternative to thermistors based on the principle of semi-conductors in terms of pricing.
Platinum-chip temperature sensors in the version "ER" or "EBR" can be universally used and are suitable for a wide range of applications in low and higher temperature ranges up to 500 °C, although this can also vary depending on the type of mounting. As a basic principle, short-term use of the temperature sensor at up to 550 °C is also admissible. The gold-plated connection wires are suitable for all common connection technologies: welding, soldering, and crimping. The ER/EBR sensor features connection wires that are reversed/run in the opposite direction relative to the middle of the sensor (see figure), and it can be provided with a solderable nickel/gold metal layer on the rear/underside as an optional extra (type EBR). The metal layer enables direct thermal contact with another body via a solder connection.

Item overview

Temperature sensor						Connection wire				Part no. for tolerance class			
Type	R_0/Ω	B	L	H	S	Material	D1	L1	R_L in mΩ/mm	F0.1 (Class AA)	F0.15 (Class A)	F0.3 (Class B)	F0.6 (Class 2B)
PCA 1.1702.1ER	1×100	1.7	2.2	1.0	0.38	NiAu	0.15	10	4.4	Upon request	Upon request	00722609F	Upon request
PCA 1.1702.1EBR	1×100	1.7	2.2	1.0	0.38	NiAu*	0.15	10	4.4	Upon request	Upon request	00722566F	Upon request
PCA 1.1702.10ER	1×1000	1.7	2.2	1.0	0.38	NiAu	0.15	10	4.4	Upon request	Upon request	00722565F	Upon request
PCA 1.1702.10EBR	1×1000	1.7	2.2	1.0	0.38	NiAu*	0.15	10	4.4	Upon request	Upon request	00722395F	Upon request

Dimension tolerances:
ΔB = ±0.2 / ΔL = ±0.5 / ΔH = ±0.2 / ΔS = ±0.1 / ΔD1 = ±0.01 / ΔL1 = ±0.5
Dimensions in mm.

Definition of tolerance classes
see data sheet 906000
"F" = Folding box (blister)

Type extension ER: nickel/gold wire that is reversed/runs in the opposite direction relative to the middle of the temperature sensor (R stands for reverse)
Type extension EBR: like type ER, but with a metallized/solderable rear/underside

* Nickel/gold also the material of the metallized rear/underside

JUMO GmbH & Co. KG
Delivery address: Mackenrodtstraße 14
36039 Fulda, Germany
Postal address: 36035 Fulda, Germany
Phone: +49 661 6003-0
Fax: +49 661 6003-607
Email: mail@jumo.net
Internet: www.jumo.net

JUMO Instrument Co. Ltd.
JUMO House
Temple Bank, Riverway
Harlow, Essex, CM20 2DY, UK
Phone: +44 1279 63 55 33
Fax: +44 1279 62 50 29
Email: sales@jumo.co.uk
Internet: www.jumo.co.uk

JUMO Process Control, Inc.
6733 Myers Road
East Syracuse, NY 13057, USA
Phone: +1 315 437 5866
Fax: +1 315 437 5860
Email: info.us@jumo.net
Internet: www.jumousa.com

Dimensional drawing

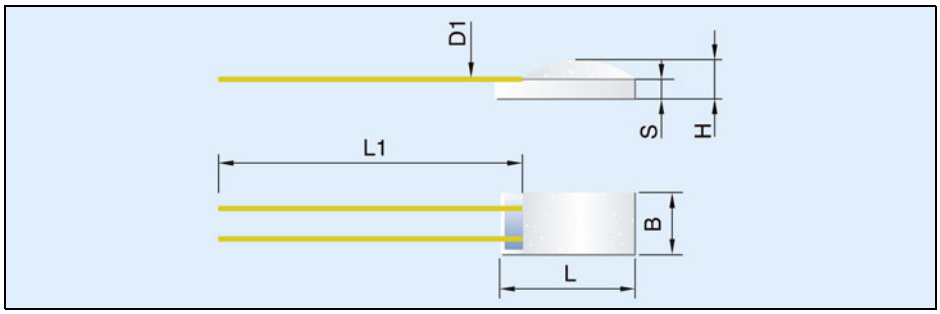

Technical data for type PCA/ER and EBR

Standard	DIN EN 60751:2009 / IEC 60751:2008
Temperature coefficient	$\alpha = 3.850 \times 10^{-3}$ °C^{-1} (between 0 and 100 °C)
Temperature range	-70 to +500 °C (temporarily 550 °C); deviations possible depending on the type of mounting
Tolerance	Temperature validity range, class F0.1 (class AA): -50 to +200 °C Temperature validity range, class F0.15 (class A): -70 to +300 °C Temperature validity range, class F0.3 (class B): -70 to +500 °C Temperature validity range, class F0.6 (class 2B): -70°to +500 °C
Measuring/maximum current	Pt100 recommended 0.5 mA, maximum 2 mA Pt1000 recommended 0.05 mA, maximum 0.2 mA
Operating conditions	Platinum-chip temperature sensors must be protected when used in a humid environment or in aggressive atmospheres. Direct immersion into liquids is also not admissible. The user may have to carry out some checks before using the sensors. **Please also refer to the installation instructions B 906121.4 "Information for the application of platinum-chip temperature sensors."**
Connection wires	These temperature sensors are equipped with connection wires made of gold-plated pure nickel wire. The connection wires are suitable for welded, soldered, and crimp connections. During further assembly work, it is essential to avoid exerting lateral pressure loads on the connections. Ensure that the horizontal traction on individual connection wires does not exceed 4 N. Avoid unnecessary bending of the connection wires because this will weaken the material and could lead to the connection wires breaking. Use a suitable tool when bending the wires. Please also refer to point 3 "Connection techniques" in our installation instructions. As an optional extra, the temperature sensors can also be ordered with longer connection wires ex works. Extension wires or insulated stranded wires in any lengths can also be fitted later as an alternative to this. In this case, however, take into account that this may result in restrictions concerning the operating temperature.
Metallized rear	Material of coating on rear: nickel/gold Application: optimized for soft-soldering in a reflow method.
Measuring point	The specified nominal value relates to the standard connection wire length L1. The measured value is taken 2 mm in front of the open wire end. Changes to the wire length will lead to changes in the resistance, which may mean the tolerance class is no longer met.
Long-term stability	Max. R_0 drift 0.05 % per year (for definition, see data sheet 906000)
Low-temperature application	Taking into account a nominal value drift and hysteresis effect that occur to a certain extent, temperature measurements down to -200 °C are also possible. Further details are available upon request.
Insulation resistance	> 10 MΩ at room temperature
Self-heating	$\Delta t = I^2 \times R \times E$ (for definition, see data sheet 906000)
Packaging	Standard packaging: folding box (blister), packaging unit: 100 pieces, loose Blister belt: upon request Cardboard box: temperature sensors with connection wires > 30 mm On tape (on foil): upon request, over- or under-delivery ±3 %
Storage	In the standard or belt packaging option, JUMO temperature sensors in design type PCA/ER and EBR can be stored for at least 12 months under normal ambient conditions. It is not admissible to store the sensors in aggressive atmospheres, corrosive media, or in high humidity.
Compliant with RoHS 2011/65/EU and 2015/863/EU	Yes
Compliant with REACH 1907/2006	Yes

JUMO GmbH & Co. KG
Delivery address: Mackenrodtstraße 14
36039 Fulda, Germany
Postal address: 36035 Fulda, Germany
Phone: +49 661 6003-0
Fax: +49 661 6003-607
Email: mail@jumo.net
Internet: www.jumo.net

JUMO Instrument Co. Ltd.
JUMO House
Temple Bank, Riverway
Harlow, Essex, CM20 2DY, UK
Phone: +44 1279 63 55 33
Fax: +44 1279 62 50 29
Email: sales@jumo.co.uk
Internet: www.jumo.co.uk

JUMO Process Control, Inc.
6733 Myers Road
East Syracuse, NY 13057, USA
Phone: +1 315 437 5866
Fax: +1 315 437 5860
Email: info.us@jumo.net
Internet: www.jumousa.com

Self-heating coefficients and response times for type PCA/ER and EBR

Type	Self-heating coefficient E in K/mW		Response times in seconds			
	Water (v = 0.2 m/s)	Air (v = 2 m/s)	In water (v = 0.4 m/s)		In air (v = 1 m/s)	
			$t_{0.5}$	$t_{0.9}$	$t_{0.5}$	$t_{0.9}$
PCA 1.1702.1ER	0.041	0.2	0.1	0.3	3	8
PCA 1.1702.1EBR	0.041	0.2	0.1	0.3	3	8
PCA 1.1702.10ER	0.041	0.2	0.1	0.3	3	9
PCA 1.1702.10EBR	0.041	0.2	0.1	0.3	3	9

JUMO GmbH & Co. KG
Delivery address: Mackenrodtstraße 14
36039 Fulda, Germany
Postal address: 36035 Fulda, Germany
Phone: +49 661 6003-0
Fax: +49 661 6003-607
Email: mail@jumo.net
Internet: www.jumo.net

JUMO Instrument Co. Ltd.
JUMO House
Temple Bank, Riverway
Harlow, Essex, CM20 2DY, UK
Phone: +44 1279 63 55 33
Fax: +44 1279 62 50 29
Email: sales@jumo.co.uk
Internet: www.jumo.co.uk

JUMO Process Control, Inc.
6733 Myers Road
East Syracuse, NY 13057, USA
Phone: +1 315 437 5866
Fax: +1 315 437 5860
Email: info.us@jumo.net
Internet: www.jumousa.com

Platinum-chip temperature sensors with nickel connection wires (tin-plated) according to DIN EN 60751:2009 / IEC 60751:2008

Design type PCA/ET

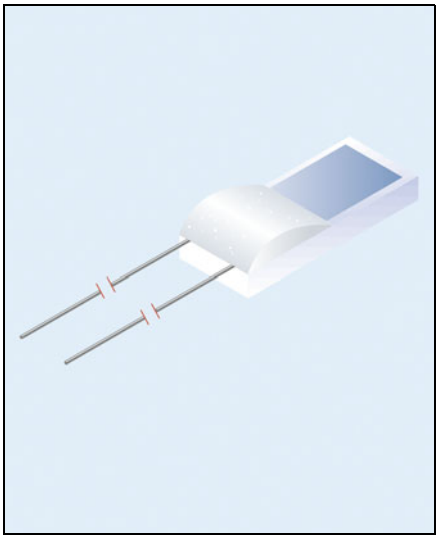

Brief description

Platinum-chip temperature sensors are based on a temperature-dependent resistance, the curve and admissible tolerance of which are defined in the international IEC 60751:2008 standard. They combine the favorable features of platinum temperature sensors with the advantages of large-scale production. They are characterized by standardization and universal interchangeability as well as high measuring accuracy, excellent long-term stability, and good reproducibility of the electric features. Demand for large quantities has led to a notable price reduction over the last few years. For this reason, platinum-chip temperature sensors are also a real alternative to thermistors based on the principle of semi-conductors in terms of pricing.
Platinum-chip temperature sensors in the version "ET" can be universally used and are suitable for a wide range of applications in low and higher temperature ranges up to 500 °C. Short-term use of the sensors at up to 550 °C is admissible. The tin-plated connection wires are particularly suitable for an electrical connection based on soft-soldered joints. The operating temperature range is -70 to +500 °C.

Item overview

Temperature sensor						Connection wire					Part no. for tolerance class			
Type	R_0/Ω	B	L	H	S	Material	D1	L1	L2	R_L in mΩ/mm	F0.1 (Class AA)	F0.15 (Class A)	F0.3 (Class B)	F0.6 (Class 2B)
PCA 1.1505.1ET	1×100	1.5	5	1.0	0.38	Ni	0.20	10	7	2.4	00642841F	00642839F	00642817F	00614587O
PCA 1.1505.10ET	1×1000	1.5	5	1.0	0.38	Ni	0.20	10	7	2.4	00642886F	00642883F	00642842F	Upon request
PCA 1.2005.1ET	1×100	2.0	5	1.3	0.64	Ni	0.20	10	7	2.4	00604449F	00604441F	00603419F	Upon request
PCA 1.2005.10ET	1×1000	2.0	5	1.3	0.64	Ni	0.20	10	7	2.4	00642808F	00603418F	00603416F	00597200O

Dimension tolerances:
ΔB = ±0.2 / ΔL = ±0.5 / ΔH = ±0.2 / ΔS = ±0.1 / ΔD1 = ±0.01 / ΔL1 = ±0.5 / ΔL2 = -0/+3 mm
Dimensions in mm.

Definition of tolerance classes
see data sheet 906000
"F" = Folding box (blister)
"O" = On tape (on foil)

JUMO GmbH & Co. KG
Delivery address: Mackenrodtstraße 14
36039 Fulda, Germany
Postal address: 36035 Fulda, Germany
Phone: +49 661 6003-0
Fax: +49 661 6003-607
Email: mail@jumo.net
Internet: www.jumo.net

JUMO Instrument Co. Ltd.
JUMO House
Temple Bank, Riverway
Harlow, Essex, CM20 2DY, UK
Phone: +44 1279 63 55 33
Fax: +44 1279 62 50 29
Email: sales@jumo.co.uk
Internet: www.jumo.co.uk

JUMO Process Control, Inc.
6733 Myers Road
East Syracuse, NY 13057, USA
Phone: +1 315 437 5866
Fax: +1 315 437 5860
Email: info.us@jumo.net
Internet: www.jumousa.com

Dimensional drawing

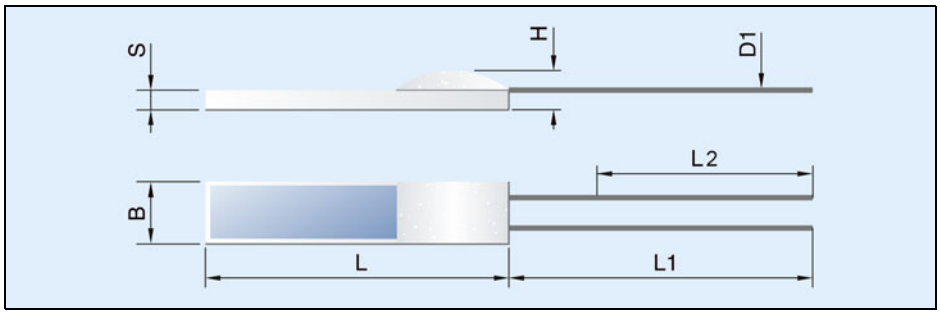

Technical data for type PCA/ET

Standard	DIN EN 60751:2009 / IEC 60751:2008
Temperature coefficient	$\alpha = 3.850 \times 10^{-3}$ °C^{-1} (between 0 and 100 °C)
Temperature range	-70 to +500 °C (temporarily 550 °C)
Tolerance	Temperature validity range, class F0.1 (class AA): -50 to +200 °C Temperature validity range, class F0.15 (class A): -70 to +300 °C Temperature validity range, class F0.3 (class B): -70 to +500 °C Temperature validity range, class F0.6 (class 2B): -70°to +500 °C
Measuring/maximum current	Pt100 recommended 1.0 mA, maximum 7 mA Pt500 recommended 0.7 mA, maximum 3 mA Pt1000 recommended 0.1 mA, maximum 1 mA
Operating conditions	Platinum-chip temperature sensors must be protected when used in a humid environment or in aggressive atmospheres. Direct immersion into liquids is also not admissible. The user may have to carry out some checks before using the sensors. **Please also refer to the installation instructions B 906121.4 "Information for the application of platinum-chip temperature sensors."**
Connection wires	These temperature sensors are equipped with connection wires made of tin-plated pure nickel wire. The connection wires are suitable for soft-soldered joints. During further assembly work, it is essential to avoid exerting lateral pressure loads on the connections. Ensure that the horizontal traction on individual connection wires does not exceed 6 N. Avoid unnecessary bending of the connection wires because this will weaken the material and could lead to the connection wires breaking. Please also refer to point 3 "Connection techniques" in our installation instructions. Longer connection wires (up to a length of 300 mm, in one piece) can also be fitted as an optional extra. Extension wires or insulated stranded wires in any lengths can also be fitted later as an alternative to this. In this case, however, take into account that this may result in restrictions concerning the operating temperature. Due to the soft-soldered joint, this part of the connection wires is designed for a maximum of +150 °C.
Measuring point	The specified nominal value relates to the standard connection wire length L1. The measured value is taken 2 mm in front of the open wire end. Changes to the wire length will lead to changes in the resistance, which may mean the tolerance class is no longer met.
Long-term stability	Max. R_0 drift 0.05 % per year (for definition, see data sheet 906000)
Low-temperature application	Taking into account a nominal value drift and hysteresis effect that occur to a certain extent, temperature measurements down to -200 °C are also possible. Further details are available upon request.
Insulation resistance	> 10 MΩ at room temperature
Self-heating	$\Delta t = I^2 \times R \times E$ (for definition, see data sheet 906000)
Packaging	Standard packaging: folding box (blister), packaging unit: 100 pieces, loose Blister belt: upon request Cardboard box: temperature sensors with connection wires > 30 mm On tape (on foil): upon request, over- or under-delivery ±3 %
Storage	In the standard or belt packaging option, JUMO temperature sensors in design type PCA/ET can be stored for at least 12 months under normal ambient conditions. It is not admissible to store the sensors in aggressive atmospheres, corrosive media, or in high humidity.
Compliant with RoHS 2011/65/EU and 2015/863/EU	Yes
Compliant with REACH 1907/2006	Yes

JUMO GmbH & Co. KG
Delivery address: Mackenrodtstraße 14
36039 Fulda, Germany
Postal address: 36035 Fulda, Germany
Phone: +49 661 6003-0
Fax: +49 661 6003-607
Email: mail@jumo.net
Internet: www.jumo.net

JUMO Instrument Co. Ltd.
JUMO House
Temple Bank, Riverway
Harlow, Essex, CM20 2DY, UK
Phone: +44 1279 63 55 33
Fax: +44 1279 62 50 29
Email: sales@jumo.co.uk
Internet: www.jumo.co.uk

JUMO Process Control, Inc.
6733 Myers Road
East Syracuse, NY 13057, USA
Phone: +1 315 437 5866
Fax: +1 315 437 5860
Email: info.us@jumo.net
Internet: www.jumousa.com

Self-heating coefficients and response times for type PCA/ET

Type	Self-heating coefficient E in K/mW		Response times in seconds			
	Water (v = 0.2 m/s)	Air (v = 2 m/s)	In water (v = 0.4 m/s)		In air (v = 1 m/s)	
			$t_{0.5}$	$t_{0.9}$	$t_{0.5}$	$t_{0.9}$
PCA 1.1505.1ET	0.02	0.2	0.1	0.3	3	8
PCA 1.1505.10ET	0.02	0.2	0.1	0.3	3	8
PCA 1.2005.1ET	0.02	0.2	0.1	0.3	3	9
PCA 1.2005.10ET	0.02	0.2	0.1	0.3	3	9

JUMO GmbH & Co. KG
Delivery address: Mackenrodtstraße 14
36039 Fulda, Germany
Postal address: 36035 Fulda, Germany
Phone: +49 661 6003-0
Fax: +49 661 6003-607
Email: mail@jumo.net
Internet: www.jumo.net

JUMO Instrument Co. Ltd.
JUMO House
Temple Bank, Riverway
Harlow, Essex, CM20 2DY, UK
Phone: +44 1279 63 55 33
Fax: +44 1279 62 50 29
Email: sales@jumo.co.uk
Internet: www.jumo.co.uk

JUMO Process Control, Inc.
6733 Myers Road
East Syracuse, NY 13057, USA
Phone: +1 315 437 5866
Fax: +1 315 437 5860
Email: info.us@jumo.net
Internet: www.jumousa.com

Platinum-chip temperature sensors with connection wires according to DIN EN 60751:2009 / IEC 60751:2008

Design type PCA/S

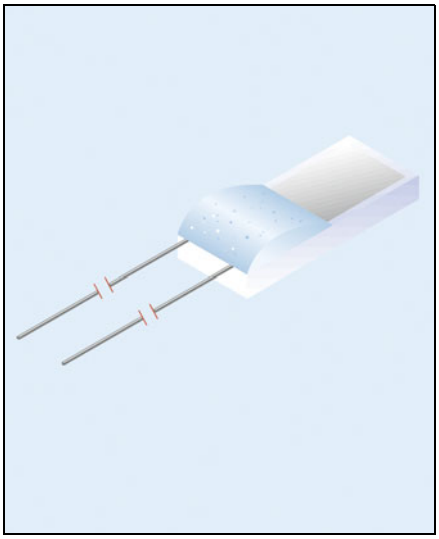

Brief description

Platinum-chip temperature sensors are based on a temperature-dependent resistance, the curve and admissible tolerance of which are defined in the international IEC 60751:2008 standard. They combine the favorable features of platinum temperature sensors with the advantages of large-scale production. They are characterized by standardization and universal interchangeability as well as high measuring accuracy, excellent long-term stability, and good reproducibility of the electric features. Demand for large quantities has led to a notable price reduction over the last few years. For this reason, platinum-chip temperature sensors are also a real alternative to thermistors based on the principle of semi-conductors in terms of pricing.
The preferred applications for platinum-chip temperature sensors in the version "S" are those with operating temperatures exceeding 180 °C. They are particularly suitable for an electrical connection based on a welded, crimp, or hard-soldered joint. The connection wires are made of a solid platinum wrapped wire and are very strong. The operating temperature range is -70 to +400 °C.

Item overview

Temperature sensor						Connection wire				Part no. for tolerance class		
Type	R_0/Ω	B	L	H	S	Material	D1	L1	R_L in mΩ/mm	F0.1 (Class AA)	F0.15 (Class A)	F0.3 (Class B)
PCA 1.2003.1S	1×100	2.0	2.5	1.3	0.64	Pt-Ni	0.20	10	2.8	00358368F 00415816B	00358365F 00415815B	00358363F 00415811B
PCA 1.2005.1S	1×100	2.0	5.0	1.3	0.64	Pt-Ni	0.20	10	2.8	00309664F 00415804B	00089225F 00415803B	00089206F 00415801B
PCA 1.2005.1S	1×100	2.0	5.0	1.3	0.64	Pt-Ni	0.20	20	2.8	00364145F -	Upon request -	00357968F -
PCA 1.2005.5S	1×500	2.0	5.0	1.3	0.64	Pt-Ni	0.20	10	2.8	00309666F 00415807B	00089226F 00415806B	00089207F 00415805B
PCA 1.2005.5S	1×500	2.0	5.0	1.3	0.64	Pt-Ni	0.20	20	2.8	00364146F -	Upon request -	00357969F -
PCA 1.2005.10S	1×1000	2.0	5.0	1.3	0.64	Pt-Ni	0.20	10	2.8	00358360F 00415810B	00358359F 00415809B	00358358F 00415808B
PCA 1.2005.10S	1×1000	2.0	5.0	1.3	0.64	Pt-Ni	0.20	20	2.8	Upon request -	Upon request -	00358285F -
PCA 1.2010.1S	1×100	2.0	10	1.3	0.64	Pt-Ni	0.20	10	2.8	00309674F 00415794B	00089222F 00415793B	00089203F 00415792B
PCA 1.2010.1S	1×100	2.0	10	1.3	0.64	Pt-Ni	0.20	20	2.8	Upon request -	Upon request -	00067265F -
PCA 1.2010.5S	1×500	2.0	10	1.3	0.64	Pt-Ni	0.20	10	2.8	00309676F 00415797B	00089223F 00415796B	00089204F 00415795B
PCA 1.2010.10S	1×1000	2.0	10	1.3	0.64	Pt-Ni	0.20	10	2.8	00309681F 00415800B	00089224F 00415799B	00089205F 00415798B
PCA 1.2010.20S	1×2000	2.0	10	1.3	0.64	Pt-Ni	0.20	10	2.8	Upon request Upon request	Upon request Upon request	00417435F 00417434B

Dimension tolerances:
ΔB = ±0.2 / ΔL = ±0.5 / ΔH = ±0.2 / ΔS = ±0.1 / ΔD1 = ±0.01 / ΔL1 = ±0.5
Dimensions in mm.

Definition of tolerance classes
see data sheet 906000
"F" = Folding box (blister)
"B" = Blister belt (upon request)

JUMO GmbH & Co. KG
Delivery address: Mackenrodtstraße 14
36039 Fulda, Germany
Postal address: 36035 Fulda, Germany
Phone: +49 661 6003-0
Fax: +49 661 6003-607
Email: mail@jumo.net
Internet: www.jumo.net

JUMO Instrument Co. Ltd.
JUMO House
Temple Bank, Riverway
Harlow, Essex, CM20 2DY, UK
Phone: +44 1279 63 55 33
Fax: +44 1279 62 50 29
Email: sales@jumo.co.uk
Internet: www.jumo.co.uk

JUMO Process Control, Inc.
6733 Myers Road
East Syracuse, NY 13057, USA
Phone: +1 315 437 5866
Fax: +1 315 437 5860
Email: info.us@jumo.net
Internet: www.jumousa.com

Dimensional drawing

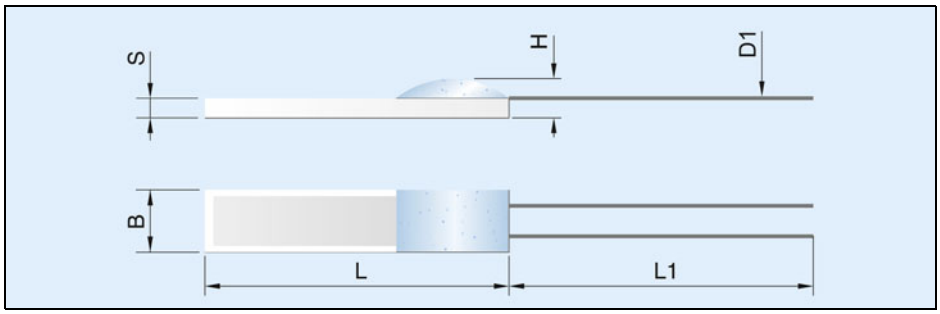

Technical data for type PCA/S

Standard	DIN EN 60751:2009 / IEC 60751:2008
Temperature coefficient	$\alpha = 3.850 \times 10^{-3}$ °C^{-1} (between 0 and 100 °C)
Temperature range	-70 to +400 °C
Tolerance	Temperature validity range, class F0.1 (class AA): -50 to +200 °C Temperature validity range, class F0.15 (class A): -70 to +300 °C Temperature validity range, class F0.3 (class B): -70 to +400 °C
Measuring/maximum current	Pt100 recommended 1.0 mA, maximum 7 mA Pt500 recommended 0.7 mA, maximum 3 mA Pt1000 recommended 0.1 mA, maximum 1 mA Pt2000 recommended 0.1 mA, maximum 1 mA
Operating conditions	Platinum-chip temperature sensors must be protected when used in a humid environment or in aggressive atmospheres. Direct immersion into liquids is also not admissible. The user may have to carry out some checks before using the sensors. **Please also refer to the installation instructions B 906121.4 "Information for the application of platinum-chip temperature sensors."**
Connection wires	These temperature sensors are equipped with connection wires made of a platinum wrapped wire with a nickel core. The connection wires are suitable for crimp, welded, and hard-soldered joints. During further assembly work, it is essential to avoid exerting lateral pressure loads on the connections. Ensure that the horizontal traction on individual connection wires does not exceed 10 N. Avoid unnecessary bending of the connection wires because this will weaken the material and could lead to the connection wires breaking. Please also refer to point 3 "Connection techniques" in our installation instructions. Longer connection wires (up to a length of 300 mm, in one piece) can also be fitted as an optional extra. Extension wires made of silver wire or insulated stranded wires in any lengths can also be fitted later as an alternative to this. In this case, however, take into account that this may result in restrictions concerning the operating temperature.
Measuring point	The specified nominal value relates to the standard connection wire length L1. The measured value is taken 2 mm in front of the open wire end. Changes to the wire length will lead to changes in the resistance, which may mean the tolerance class is no longer met.
Long-term stability	Max. R_0 drift 0.05 % per year (for definition, see data sheet 906000)
Low-temperature application	Taking into account a nominal value drift and hysteresis effect that occur to a certain extent, temperature measurements down to -200 °C are also possible. Further details are available upon request.
Insulation resistance	> 10 MΩ at room temperature
Self-heating	$\Delta t = I^2 \times R \times E$ (for definition, see data sheet 906000)
Packaging	Standard packaging: folding box (blister), packaging unit: 100 pieces, loose Blister belt: upon request Cardboard box: temperature sensors with connection wires > 30 mm
Storage	In the standard or belt packaging option, JUMO temperature sensors in design type PCA/S can be stored for at least 12 months under normal ambient conditions. It is not admissible to store the sensors in aggressive atmospheres, corrosive media, or in high humidity.
Compliant with RoHS 2011/65/EU and 2015/863/EU	Yes
Compliant with REACH 1907/2006	Yes

JUMO GmbH & Co. KG
Delivery address: Mackenrodtstraße 14
36039 Fulda, Germany
Postal address: 36035 Fulda, Germany
Phone: +49 661 6003-0
Fax: +49 661 6003-607
Email: mail@jumo.net
Internet: www.jumo.net

JUMO Instrument Co. Ltd.
JUMO House
Temple Bank, Riverway
Harlow, Essex, CM20 2DY, UK
Phone: +44 1279 63 55 33
Fax: +44 1279 62 50 29
Email: sales@jumo.co.uk
Internet: www.jumo.co.uk

JUMO Process Control, Inc.
6733 Myers Road
East Syracuse, NY 13057, USA
Phone: +1 315 437 5866
Fax: +1 315 437 5860
Email: info.us@jumo.net
Internet: www.jumousa.com

Self-heating coefficients and response times for type PCA/S

Type	Self-heating coefficient E in K/mW		Response times in seconds			
	Water (v = 0.2 m/s)	Air (v = 2 m/s)	In water (v = 0.4 m/s)		In air (v = 1 m/s)	
			$t_{0.5}$	$t_{0.9}$	$t_{0.5}$	$t_{0.9}$
PCA 1.2003.1S	0.02	0.2	0.1	0.3	3	9
PCA 1.2005.1S	0.02	0.2	0.1	0.3	3	9
PCA 1.2005.5S	0.02	0.2	0.1	0.3	3	9
PCA 1.2005.10S	0.02	0.2	0.1	0.3	3	9
PCA 1.2010.1S	0.02	0.2	0.1	0.3	3	9
PCA 1.2010.5S	0.01	0.2	0.2	0.4	3	9
PCA 1.2010.10S	0.01	0.2	0.2	0.4	3	9
PCA 1.2010.20S	0.01	0.2	0.2	0.4	3	9

JUMO GmbH & Co. KG
Delivery address: Mackenrodtstraße 14
36039 Fulda, Germany
Postal address: 36035 Fulda, Germany
Phone: +49 661 6003-0
Fax: +49 661 6003-607
Email: mail@jumo.net
Internet: www.jumo.net

JUMO Instrument Co. Ltd.
JUMO House
Temple Bank, Riverway
Harlow, Essex, CM20 2DY, UK
Phone: +44 1279 63 55 33
Fax: +44 1279 62 50 29
Email: sales@jumo.co.uk
Internet: www.jumo.co.uk

JUMO Process Control, Inc.
6733 Myers Road
East Syracuse, NY 13057, USA
Phone: +1 315 437 5866
Fax: +1 315 437 5860
Email: info.us@jumo.net
Internet: www.jumousa.com

Platinum-chip temperature sensors with connection wires according to DIN EN 60751:2009 / IEC 60751:2008

Design type PCA/M

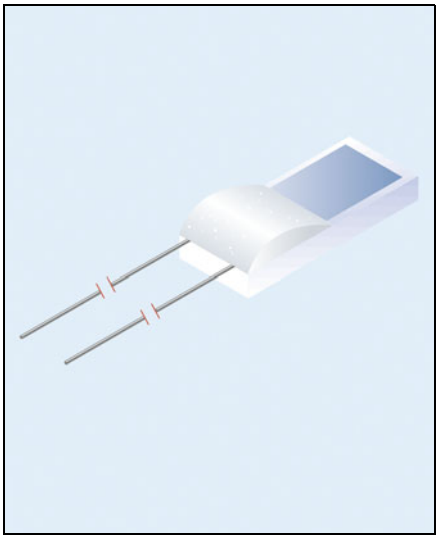

Brief description

Platinum-chip temperature sensors are based on a temperature-dependent resistance, the curve and admissible tolerance of which are defined in the international IEC 60751:2008 standard. They combine the favorable features of platinum temperature sensors with the advantages of large-scale production. They are characterized by standardization and universal interchangeability as well as high measuring accuracy, excellent long-term stability, and good reproducibility of the electric features. Demand for large quantities has led to a notable price reduction over the last few years. For this reason, platinum-chip temperature sensors are also a real alternative to thermistors based on the principle of semi-conductors in terms of pricing.
Platinum-chip temperature sensors in the version "M" offer the widest range of implementation possibilities for most applications. The temperature sensors feature a particularly wide temperature measuring range from -70 to +550 °C. A wide range of different versions is already available on stock. Available miniature versions can also considerably simplify assembly in situations where only little space is available. Another advantage is the special coating method used for this version, allowing the sensor to be used unprotected in humid ambient air. Typical application examples include air conditioning technology and industrial humidity measuring technology.

Item overview

Temperature sensor						Connection wire				Part no. for tolerance class		
Type	R_0/Ω	B	L	H	S	Material	D1	L1	R_L in mΩ/mm	F0.1 (Class AA)	F0.15 (Class A)	F0.3 (Class B)
PCA 1.1505.1M	1×100	1.5	5.0	1.0	0.38	Pt-Ni	0.20	10	2.8	00409843F 00417179B	00409841F 00417177B	00409840F 00417178B
PCA 1.1505.1M	1×100	1.5	5.0	1.0	0.38	Pt-Ni	0.20	15	2.8	00430392F 00430396B	00430393F 00430394B	00430391F 00430395B
PCA 1.1505.5M	1×500	1.5	5.0	1.0	0.38	Pt-Ni	0.20	10	2.8	00409847F 00417185B	00409845F 00417183B	00409844F 00417184B
PCA 1.1505.10M	1×1000	1.5	5.0	1.0	0.38	Pt-Ni	0.20	10	2.8	00409850F 00417182B	00409849F 00417180B	00409848F 00417181B
PCA 1.1505.10M	1×1000	1.5	5.0	1.0	0.38	Pt-Ni	0.20	15	2.8	00625678F Upon request	00625677F Upon request	00425409F Upon request
PCA 1.2003.1M	1×100	2.0	2.5	1.3	0.64	Pt-Ni	0.20	10	2.8	00526951F	00489996F	00489994F
PCA 1.2003.1M	1×100	2.0	2.5	1.3	0.64	Pt-Ni	0.20	13	2.8	00412342F 00415833B	00412341F 00415834B	00412318F 00415832B
PCA 1.2003.10M	1×1000	2.0	2.5	1.3	0.64	Pt-Ni	0.20	10	2.8	00623370F	00623367F	00592065F
PCA 1.2005.1M	1×100	2.0	5.0	1.3	0.64	Pt-Ni	0.20	10	2.8	00387454F 00415836B	00387455F 00415837B	00387456F 00415835B
PCA 1.2005.5M	1×500	2.0	5.0	1.3	0.64	Pt-Ni	0.20	10	2.8	00387453F 00415839B	00387449F 00415840B	00387465F 00415838B
PCA 1.2005.10M	1×1000	2.0	5.0	1.3	0.64	Pt-Ni	0.20	10	2.8	00412308F 00415842B	00412311F 00415843B	00412307F 00415841B
PCA 1.2010.1M	1×100	2.0	10	1.3	0.64	Pt-Ni	0.20	10	2.8	00412338F 00415845B	00412337F 00415846B	00412339F 00415844B
PCA 1.2010.5M	1×500	2.0	10	1.3	0.64	Pt-Ni	0.20	10	2.8	Upon request Upon request	Upon request Upon request	Upon request Upon request
PCA 1.2010.10M	1×1000	2.0	10	1.3	0.64	Pt-Ni	0.20	10	2.8	00387458F 00415848B	00387459F 00415849B	00387460F 00415847B

Dimension tolerances:
$\Delta B = \pm 0.2$ / $\Delta L = \pm 0.5$ / $\Delta H = \pm 0.2$ / $\Delta S = \pm 0.1$ / $\Delta D1 = \pm 0.01$ / $\Delta L1 = \pm 0.5$
Dimensions in mm.

Definition of tolerance classes
see data sheet 906000
"F" = Folding box (blister)
"B" = Blister belt (upon request)

JUMO GmbH & Co. KG
Delivery address: Mackenrodtstraße 14
36039 Fulda, Germany
Postal address: 36035 Fulda, Germany
Phone: +49 661 6003-0
Fax: +49 661 6003-607
Email: mail@jumo.net
Internet: www.jumo.net

JUMO Instrument Co. Ltd.
JUMO House
Temple Bank, Riverway
Harlow, Essex, CM20 2DY, UK
Phone: +44 1279 63 55 33
Fax: +44 1279 62 50 29
Email: sales@jumo.co.uk
Internet: www.jumo.co.uk

JUMO Process Control, Inc.
6733 Myers Road
East Syracuse, NY 13057, USA
Phone: +1 315 437 5866
Fax: +1 315 437 5860
Email: info.us@jumo.net
Internet: www.jumousa.com

Dimensional drawing

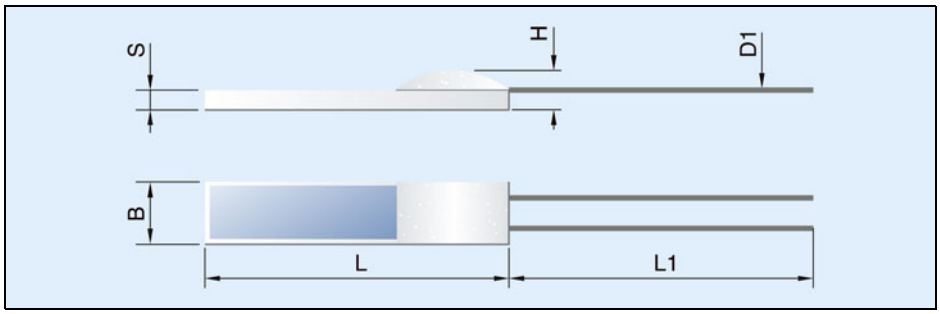

Technical data for type PCA/M

Standard	DIN EN 60751:2009 / IEC 60751:2008
Temperature coefficient	$\alpha = 3.850 \times 10^{-3}$ °C^{-1} (between 0 and 100 °C)
Temperature range	-70 to +550 °C
Tolerance	Temperature validity range, class F0.1 (class AA): -50 to +200 °C Temperature validity range, class F0.15 (class A): -70 to +300 °C Temperature validity range, class F0.3 (class B): -70 to +550°C
Measuring/maximum current	Pt100 recommended 1.0 mA, maximum 7 mA Pt500 recommended 0.7 mA, maximum 3 mA Pt1000 recommended 0.1 mA, maximum 1 mA
Operating conditions	Platinum-chip temperature sensors must be protected when used in a humid environment or in aggressive atmospheres. Direct immersion into liquids is also not admissible. The user may have to carry out some checks before using the sensors. **Please also refer to the installation instructions B 906121.4 "Information for the application of platinum-chip temperature sensors."**
Connection wires	These temperature sensors are equipped with connection wires made of a platinum wrapped wire with a nickel core. The connection wires are suitable for crimp, welded, and hard-soldered joints. During further assembly work, it is essential to avoid exerting lateral pressure loads on the connections. Ensure that the horizontal traction on individual connection wires does not exceed 10 N. Avoid unnecessary bending of the connection wires because this will weaken the material and could lead to the connection wires breaking. Please also refer to point 3 "Connection techniques" in our installation instructions. Longer connection wires (up to a length of 300 mm, in one piece) can also be fitted as an optional extra. Extension wires made of silver wire or insulated stranded wires in any lengths can also be fitted later as an alternative to this. Take into account that there may be restrictions concerning the operating temperature.
Measuring point	The specified nominal value relates to the standard connection wire length L1. The measured value is taken 2 mm in front of the open wire end. Changes to the wire length will lead to changes in the resistance, which may mean the tolerance class is no longer met.
Long-term stability	Max. R_0 drift 0.05 % per year (for definition, see data sheet 906000)
Low-temperature application	Taking into account a nominal value drift and hysteresis effect that occur to a certain extent, temperature measurements down to -200 °C are also possible. Further details are available upon request.
Insulation resistance	> 10 MΩ at room temperature
Self-heating	$\Delta t = I^2 \times R \times E$ (for definition, see data sheet 906000)
Packaging	Standard packaging: folding box (blister), packaging unit: 100 pieces, loose Blister belt: upon request Cardboard box: temperature sensors with connection wires > 30 mm
Storage	In the standard or belt packaging option, JUMO temperature sensors in design type PCA/M can be stored for at least 12 months under normal ambient conditions. It is not admissible to store the sensors in aggressive atmospheres, corrosive media, or in high humidity.
Compliant with RoHS 2011/65/EU and 2015/863/EU	Yes
Compliant with REACH 1907/2006	Yes

JUMO GmbH & Co. KG
Delivery address: Mackenrodtstraße 14
36039 Fulda, Germany
Postal address: 36035 Fulda, Germany
Phone: +49 661 6003-0
Fax: +49 661 6003-607
Email: mail@jumo.net
Internet: www.jumo.net

JUMO Instrument Co. Ltd.
JUMO House
Temple Bank, Riverway
Harlow, Essex, CM20 2DY, UK
Phone: +44 1279 63 55 33
Fax: +44 1279 62 50 29
Email: sales@jumo.co.uk
Internet: www.jumo.co.uk

JUMO Process Control, Inc.
6733 Myers Road
East Syracuse, NY 13057, USA
Phone: +1 315 437 5866
Fax: +1 315 437 5860
Email: info.us@jumo.net
Internet: www.jumousa.com

Self-heating coefficients and response times for type PCA/M

Type	Self-heating coefficient E in K/mW		Response times in seconds			
	Water (v = 0.2 m/s)	Air (v = 2 m/s)	In water (v = 0.4 m/s)		In air (v = 1 m/s)	
			$t_{0.5}$	$t_{0.9}$	$t_{0.5}$	$t_{0.9}$
PCA 1.1505.1M	0.02	0.2	0.1	0.3	3	8
PCA 1.1505.5M	0.02	0.2	0.1	0.3	3	8
PCA 1.1505.10M	0.02	0.2	0.1	0.3	3	8
PCA 1.2003.1M	0.02	0.2	0.1	0.3	3	9
PCA 1.2003.10M	0.02	0.2	0.1	0.3	3	9
PCA 1.2005.1M	0.02	0.2	0.1	0.3	4	16
PCA 1.2005.5M	0.02	0.2	0.1	0.3	4	16
PCA 1.2005.10M	0.02	0.2	0.2	0.3	4	16
PCA 1.2010.1M	0.02	0.2	0.3	0.5	7	22
PCA 1.2010.5M	0.01	0.2	0.3	0.5	7	22
PCA 1.2010.10M	0.01	0.2	0.3	0.5	7	22

JUMO GmbH & Co. KG
Delivery address: Mackenrodtstraße 14
36039 Fulda, Germany
Postal address: 36035 Fulda, Germany
Phone: +49 661 6003-0
Fax: +49 661 6003-607
Email: mail@jumo.net
Internet: www.jumo.net

JUMO Instrument Co. Ltd.
JUMO House
Temple Bank, Riverway
Harlow, Essex, CM20 2DY, UK
Phone: +44 1279 63 55 33
Fax: +44 1279 62 50 29
Email: sales@jumo.co.uk
Internet: www.jumo.co.uk

JUMO Process Control, Inc.
6733 Myers Road
East Syracuse, NY 13057, USA
Phone: +1 315 437 5866
Fax: +1 315 437 5860
Email: info.us@jumo.net
Internet: www.jumousa.com

Platinum-chip temperature sensors with connection wires according to DIN EN 60751:2009 / IEC 60751:2008

Design type PCA/H

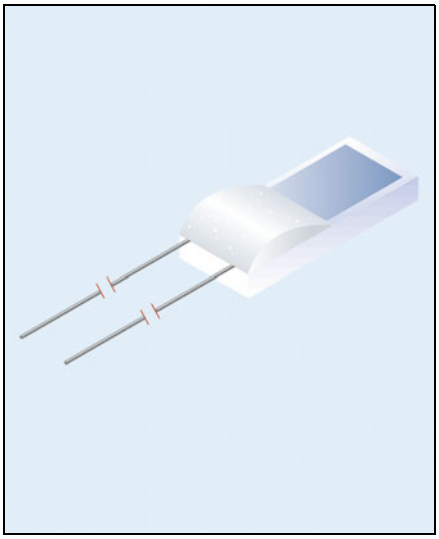

Brief description

Platinum-chip temperature sensors are based on a temperature-dependent resistance, the curve and admissible tolerance of which are defined in the international IEC 60751:2008 standard. They combine the favorable features of platinum temperature sensors with the advantages of large-scale production. They are characterized by standardization and universal interchangeability as well as high measuring accuracy, excellent long-term stability, and good reproducibility of the electric features. Demand for large quantities has led to a notable price reduction over the last few years. For this reason, platinum-chip temperature sensors are also a real alternative to thermistors based on the principle of semi-conductors in terms of pricing.
The preferred applications for platinum-chip temperature sensors in the version "H" are those with particularly high and permanently high operating temperatures. They are suitable for an electrical connection based on the melting and laser melting method as well as hard-soldered joints. The connection wires are made of pure palladium. The operating temperature range is designed for -70 to +600 °C.

Item overview

Temperature sensor						Connection wire				Part no. for tolerance class		
Type	R_0/Ω	B	L	H	S	Material	D1	L1	R_L in mΩ/mm	F0.1 (Class AA)	F0.15 (Class A)	F0.3 (Class B)
PCA 1.2010.1H	1×100	2	10	1.2	0.64	Pd	0.25	10	2.3	00343070F 00415851B	00343069F 00415852B	00053198F 00415850B
PCA 1.2010.5H	1×500	2	10	1.2	0.64	Pd	0.25	10	2.3	Upon request Upon request	Upon request Upon request	Upon request Upon request
PCA 1.2010.10H	1×1000	2	10	1.2	0.64	Pd	0.25	10	2.3	00343065F 00415855B	00343064F 00415856B	00044796F 00415854B

Dimension tolerances:
ΔB = ±0.2 / ΔL = ±0.5 / ΔH = ±0.2 / ΔS = ±0.1 / ΔD1 = ±0.01 / ΔL1 = ±0.5
Dimensions in mm.

Definition of tolerance classes
see data sheet 906000
"F" = Folding box (blister)
"B" = Blister belt (upon request)

JUMO GmbH & Co. KG
Delivery address: Mackenrodtstraße 14
36039 Fulda, Germany
Postal address: 36035 Fulda, Germany
Phone: +49 661 6003-0
Fax: +49 661 6003-607
Email: mail@jumo.net
Internet: www.jumo.net

JUMO Instrument Co. Ltd.
JUMO House
Temple Bank, Riverway
Harlow, Essex, CM20 2DY, UK
Phone: +44 1279 63 55 33
Fax: +44 1279 62 50 29
Email: sales@jumo.co.uk
Internet: www.jumo.co.uk

JUMO Process Control, Inc.
6733 Myers Road
East Syracuse, NY 13057, USA
Phone: +1 315 437 5866
Fax: +1 315 437 5860
Email: info.us@jumo.net
Internet: www.jumousa.com

Dimensional drawing

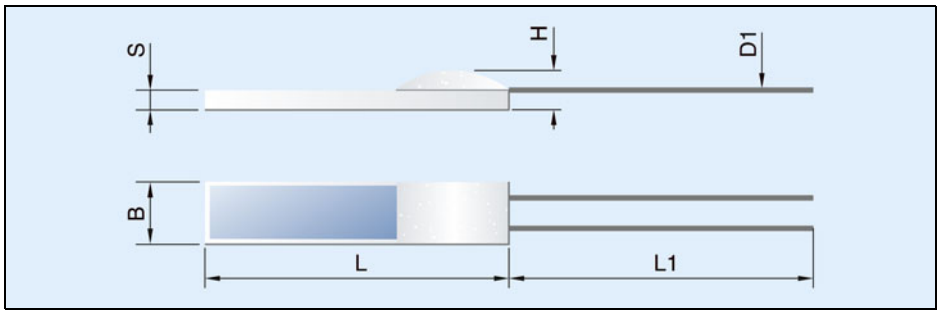

Technical data for type PCA/H

Standard	DIN EN 60751:2009 / IEC 60751:2008
Temperature coefficient	$\alpha = 3.850 \times 10^{-3}$ °C^{-1} (between 0 and 100 °C)
Temperature range	-70 to +600 °C
Tolerance	Temperature validity range, class F0.1 (class AA): -50 to +200 °C Temperature validity range, class F0.15 (class A): -70 to +300 °C Temperature validity range, class F0.3 (class B): -70 to +600 °C
Measuring/maximum current	Pt100 recommended 1.0 mA, maximum 7 mA Pt1000 recommended 0.1 mA, maximum 1 mA
Operating conditions	Platinum-chip temperature sensors must be protected when used in a humid environment or in aggressive atmospheres. Direct immersion into liquids is also not admissible. The user may have to carry out some checks before using the sensors. **Please also refer to the installation instructions B 906121.4 "Information for the application of platinum-chip temperature sensors."**
Connection wires	These temperature sensors are equipped with connection wires made of pure palladium. The connection wires are suitable for the melting and laser melting method as well as hard-soldered joints. During further assembly work, it is essential to avoid exerting lateral pressure loads on the connections. Ensure that the horizontal traction on individual connection wires does not exceed 6 N. Avoid unnecessary bending of the connection wires because this will weaken the material and could lead to the connection wires breaking.
Measuring point	The specified nominal value relates to the standard connection wire length L1. The measured value is taken 2 mm in front of the open wire end. Changes to the wire length will lead to changes in the resistance, which may mean the tolerance class is no longer met.
Long-term stability	Max. R_0 drift 0.05 % per year (for definition, see data sheet 906000)
Low-temperature application	Taking into account a nominal value drift and hysteresis effect that occur to a certain extent, temperature measurements down to -200 °C are also possible. Further details are available upon request.
Insulation resistance	> 10 MΩ at room temperature
Self-heating	$\Delta t = I^2 \times R \times E$ (for definition, see data sheet 906000)
Packaging	Standard packaging: folding box (blister), packaging unit: 100 pieces, loose Blister belt: upon request Cardboard box: temperature sensors with connection wires > 30 mm
Storage	In the standard or belt packaging option, JUMO temperature sensors in design type PCA/H can be stored for at least 12 months under normal ambient conditions. It is not admissible to store the sensors in aggressive atmospheres, corrosive media, or in high humidity.
Compliant with RoHS 2011/65/EU and 2015/863/EU	Yes
Compliant with REACH 1907/2006	Yes

JUMO GmbH & Co. KG
Delivery address: Mackenrodtstraße 14
36039 Fulda, Germany
Postal address: 36035 Fulda, Germany
Phone: +49 661 6003-0
Fax: +49 661 6003-607
Email: mail@jumo.net
Internet: www.jumo.net

JUMO Instrument Co. Ltd.
JUMO House
Temple Bank, Riverway
Harlow, Essex, CM20 2DY, UK
Phone: +44 1279 63 55 33
Fax: +44 1279 62 50 29
Email: sales@jumo.co.uk
Internet: www.jumo.co.uk

JUMO Process Control, Inc.
6733 Myers Road
East Syracuse, NY 13057, USA
Phone: +1 315 437 5866
Fax: +1 315 437 5860
Email: info.us@jumo.net
Internet: www.jumousa.com

Self-heating coefficients and response times for type PCA/H

Type	Self-heating coefficient E in K/mW		Response times in seconds			
	Water (v = 0.2 m/s)	Air (v = 2 m/s)	In water (v = 0.4 m/s)		In air (v = 1 m/s)	
			$t_{0.5}$	$t_{0.9}$	$t_{0.5}$	$t_{0.9}$
PCA 1.2010.1H	0.02	0.2	0.3	0.5	7	22
PCA 1.2010.5H	0.02	0.2	0.3	0.5	7	22
PCA 1.2010.10H	0.01	0.2	0.3	0.5	7	22

JUMO GmbH & Co. KG
Delivery address: Mackenrodtstraße 14
36039 Fulda, Germany
Postal address: 36035 Fulda, Germany
Phone: +49 661 6003-0
Fax: +49 661 6003-607
Email: mail@jumo.net
Internet: www.jumo.net

JUMO Instrument Co. Ltd.
JUMO House
Temple Bank, Riverway
Harlow, Essex, CM20 2DY, UK
Phone: +44 1279 63 55 33
Fax: +44 1279 62 50 29
Email: sales@jumo.co.uk
Internet: www.jumo.co.uk

JUMO Process Control, Inc.
6733 Myers Road
East Syracuse, NY 13057, USA
Phone: +1 315 437 5866
Fax: +1 315 437 5860
Email: info.us@jumo.net
Internet: www.jumousa.com

Platinum-chip temperature sensors with connection wires according to DIN EN 60751:2009 / IEC 60751:2008

Design type PCA/L

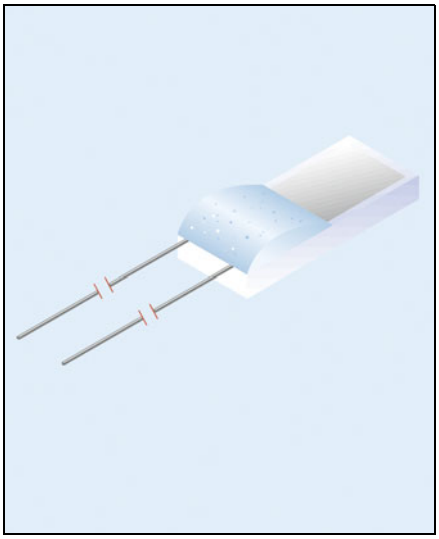

Brief description

Platinum-chip temperature sensors are based on a temperature-dependent resistance, the curve and admissible tolerance of which are defined in the international IEC 60751:2008 standard. They combine the favorable features of platinum temperature sensors with the advantages of large-scale production. They are characterized by standardization and universal interchangeability as well as high measuring accuracy, excellent long-term stability, and good reproducibility of the electric features. Demand for large quantities has led to a notable price reduction over the last few years. For this reason, platinum-chip temperature sensors are also a real alternative to thermistors based on the principle of semi-conductors in terms of pricing.
The preferred application for platinum-chip temperature sensors in the version "L" is the assembly of various probes with connecting cable. They are particularly suitable for an electrical connection based on soft-soldered joints. The connection wires are made of pure silver and ideal for this type of connection.
For this reason, the operating temperature range is designed for -70 to +250 °C. However, the maximum temperature is +350 °C to allow for further applications.

Item overview

Temperature sensor						Connection wire				Part no. for tolerance class		
Type	R_0/Ω	B	L	H	S	Material	Dim.	L1	R_L in mΩ/mm	F0.1* (Class AA)*	F0.15* (Class A)*	F0.3 (Class B)
PCA 1.2005.1L	1×100	2	5	1.3	0.64	Ag	0.2 × 0.3	10	0.3	00063358F* 00415828B*	00417995F* 00415827B*	00063260F 00415826B
PCA 1.2005.5L	1×500	2	5	1.3	0.64	Ag	0.2 × 0.3	10	0.3	00063359F* 00415831B*	00417996F* 00415830B*	00063261F 00415829B
PCA 1.2005.10L	1×1000	2	5	1.3	0.64	Ag	0.2 × 0.3	15	0.3	00535790B*	00535798B*	00534968B
PCA 1.2010.1L	1×100	2	10	1.3	0.64	Ag	0.2 × 0.3	10	0.3	00047408F* 00415819B*	00062559F* 00415818B*	00044789F 00415817B
PCA 1.2010.1L	1×100	2	10	1.3	0.64	Ag	0.2 × 0.3	30	0.3	Upon request -	Upon request -	00323380F -
PCA 1.2010.5L	1×500	2	10	1.3	0.64	Ag	0.2 × 0.3	10	0.3	00049133F* 00415822B*	Upon request 00415821B*	00048147F 00415820B
PCA 1.2010.10L	1×1000	2	10	1.3	0.64	Ag	0.2 × 0.3	10	0.3	00062567F* 00415825B*	00062566F* 00415824B*	00062565F 00415823B

Dimension tolerances:
ΔB = ±0.2 / ΔL = ±0.5 / ΔH = ±0.2 / ΔS = ±0.1 / ΔDim. = approx. dimensions / ΔL1 = ±0.5
Dimensions in mm.

(class A) upon request. We recommend using

Definition of tolerance classes
see data sheet 906000
"F" = Folding box (blister)
"B" = Blister belt (upon request)
* Tolerance class F0.1 (class AA) and F0.15 type PCA/ET for these tolerance classes.

JUMO GmbH & Co. KG
Delivery address: Mackenrodtstraße 14
36039 Fulda, Germany
Postal address: 36035 Fulda, Germany
Phone: +49 661 6003-0
Fax: +49 661 6003-607
Email: mail@jumo.net
Internet: www.jumo.net

JUMO Instrument Co. Ltd.
JUMO House
Temple Bank, Riverway
Harlow, Essex, CM20 2DY, UK
Phone: +44 1279 63 55 33
Fax: +44 1279 62 50 29
Email: sales@jumo.co.uk
Internet: www.jumo.co.uk

JUMO Process Control, Inc.
6733 Myers Road
East Syracuse, NY 13057, USA
Phone: +1 315 437 5866
Fax: +1 315 437 5860
Email: info.us@jumo.net
Internet: www.jumousa.com

Dimensional drawing

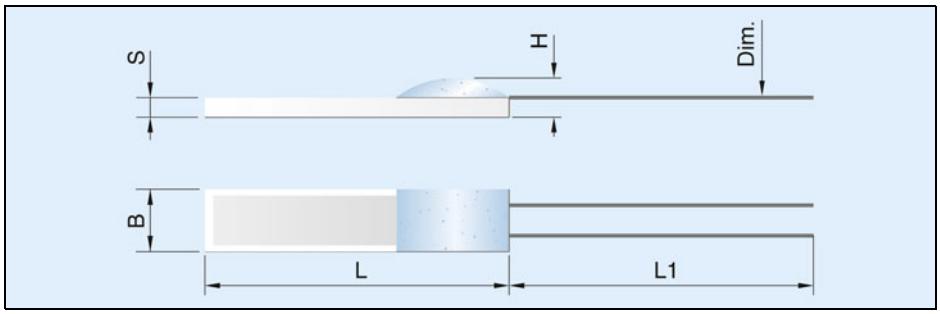

Technical data for type PCA/L

Standard	DIN EN 60751:2009 / IEC 60751:2008
Temperature coefficient	$\alpha = 3.850 \times 10^{-3}$ °C^{-1} (between 0 and 100 °C)
Temperature range	-70 to +250 °C (+350 °C)
Tolerance	Temperature validity range, class F0.1 (class AA): -50 to +200 °C Temperature validity range, class F0.15 (class A): -70 to +300 °C Temperature validity range, class F0.3 (class B): -70 to +350 °C
Measuring/maximum current	Pt100 recommended 1.0 mA, maximum 7 mA Pt500 recommended 0.7 mA, maximum 3 mA Pt1000 recommended 0.1 mA, maximum 1 mA
Operating conditions	Platinum-chip temperature sensors must be protected when used in a humid environment or in aggressive atmospheres. Direct immersion into liquids is also not admissible. The user may have to carry out some checks before using the sensors. **Please also refer to the installation instructions B 906121.4 "Information for the application of platinum-chip temperature sensors."**
Connection wires	These temperature sensors are equipped with connection wires made of pure silver. The connection wires are particularly suitable for soft-soldered joints. During further assembly work, it is essential to avoid exerting lateral pressure loads on the connections. Ensure that the horizontal traction on individual connection wires does not exceed 5 N. Avoid unnecessary bending of the connection wires because this will weaken the material and could lead to the connection wires breaking. Please also refer to point 3 "Connection techniques" in our installation instructions. Longer connection wires up to a length of 300 mm (in one piece) can be fitted as an optional extra. Upon request, as an alternative, extension wires in any lengths or insulated stranded wires can also be fitted later.
Measuring point	The specified nominal value relates to the standard connection wire length L1. The measured value is taken 2 mm in front of the open wire end. Changes to the wire length will lead to changes in the resistance, which may mean the tolerance class is no longer met.
Long-term stability	Max. R_0 drift 0.05 % per year (for definition, see data sheet 906000)
Low-temperature application	Taking into account a nominal value drift and hysteresis effect that occur to a certain extent, temperature measurements down to -200 °C are also possible. Further details are available upon request.
Insulation resistance	> 10 MΩ at room temperature
Self-heating	$\Delta t = I^2 \times R \times E$ (for definition, see data sheet 906000)
Packaging	Standard packaging: folding box (blister), packaging unit: 100 pieces, loose Blister belt: upon request Cardboard box: temperature sensors with connection wires > 30 mm
Storage	In the standard or belt packaging option, JUMO temperature sensors in design type PCA/L can be stored for at least 12 months under normal ambient conditions. It is not admissible to store the sensors in aggressive atmospheres, corrosive media, or in high humidity. As the connection wires of this version are made of pure silver, the shelf life can be extended when stored in air-tight packaging and in a dark environment. Otherwise, silver tends to tarnish over time, making soldering more difficult.
Compliant with RoHS 2011/65/EU and 2015/863/EU	Yes
Compliant with REACH 1907/2006	Yes

JUMO GmbH & Co. KG
Delivery address: Mackenrodtstraße 14
36039 Fulda, Germany
Postal address: 36035 Fulda, Germany
Phone: +49 661 6003-0
Fax: +49 661 6003-607
Email: mail@jumo.net
Internet: www.jumo.net

JUMO Instrument Co. Ltd.
JUMO House
Temple Bank, Riverway
Harlow, Essex, CM20 2DY, UK
Phone: +44 1279 63 55 33
Fax: +44 1279 62 50 29
Email: sales@jumo.co.uk
Internet: www.jumo.co.uk

JUMO Process Control, Inc.
6733 Myers Road
East Syracuse, NY 13057, USA
Phone: +1 315 437 5866
Fax: +1 315 437 5860
Email: info.us@jumo.net
Internet: www.jumousa.com

Self-heating coefficients and response times for type PCA/L

Type	Self-heating coefficient E in K/mW		Response times in seconds			
	In water (v = 0.2 m/s)	In air (v = 2 m/s)	In water (v = 0.4 m/s)		In air (v = 1 m/s)	
			$t_{0.5}$	$t_{0.9}$	$t_{0.5}$	$t_{0.9}$
PCA 1.2005.1L	0.02	0.2	0.1	0.3	4	16
PCA 1.2005.5L	0.02	0.2	0.1	0.3	4	16
PCA 1.2005.10L	0.02	0.2	0.1	0.3	4	16
PCA 1.2010.1L	0.02	0.2	0.3	0.3	7	22
PCA 1.2010.5L	0.01	0.2	0.3	0.5	7	22
PCA 1.2010.10L	0.01	0.2	0.3	0.5	7	22

JUMO GmbH & Co. KG
Delivery address: Mackenrodtstraße 14, 36039 Fulda, Germany
Postal address: 36035 Fulda, Germany
Phone: +49 661 6003-0
Fax: +49 661 6003-607
e-mail: mail@jumo.net
Internet: www.jumo.net

JUMO Instrument Co. Ltd.
JUMO House
Temple Bank, Riverway
Harlow, Essex CM20 2DY, UK
Phone: +44 1279 635533
Fax: +44 1279 635262
e-mail: sales@jumo.co.uk
Internet: www.jumo.co.uk

JUMO Process Control, Inc.
8 Technology Boulevard
Canastota, NY 13032, USA
Phone: 315-697-JUMO
1-800-554-JUMO
Fax: 315-697-5867
e-mail: info@jumo.us
Internet: www.jumo.us

Platinum-chip temperature sensors in SMD style on epoxy card to EN 60 751

- **for temperatures from -20 to +150°C**
- **Reference values Pt100, Pt500 and Pt1000**
- **standardized nominal values and tolerance**
- **pre-assembled measuring insert**
- **automated processing is possible**
- **SMD temperature sensors offer a price advantage**

PCSE style

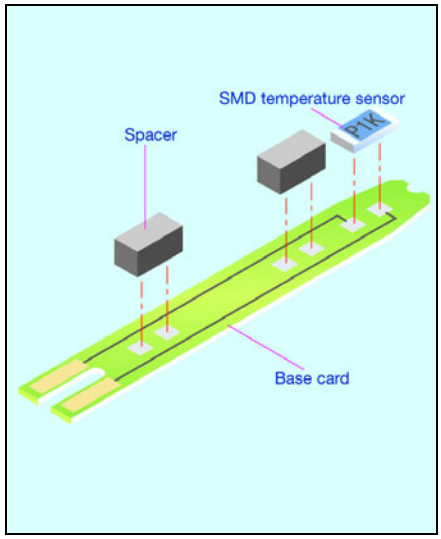

Introduction

PCSE style platinum-chip temperature sensors constitute a pre-assembled measurement insert. The epoxy card carries an assembled platinum SMD temperature sensor as the active component to acquire the temperature.

The resistance signal is transmitted to the contact areas on opposing sides, via thin tracks. The connection is made through solder contacts, so that a variety of different connecting cables can be soldered on with ease. In addition, spacers are fitted on the card, which make it possible to center the card within the protection tube. Furthermore, they also ensure that the safety distance required for the insulation between temperature sensor and protection tube is maintained.

PCSE style platinum-chip temperature sensors are available from stock as Pt100, Pt500 and Pt1000 measuring inserts.
The application temperature range covers -20 to +150°C.

Technical publication

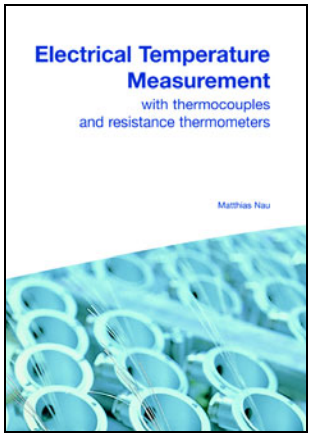

This revised edition takes account of altered standards and recent developments. The new chapter “Measurement uncertainty” incorporates the basic concept of the internationally recognized ISO guideline “Guide to the expression of uncertainty in measurement” (abbreviated: GUM).
In addition, the chapter on explosion protection for thermometers has been updated in view of the European Directive 94/9/EC, which has been in force since 1st July 2003.

August 2002
Publication FAS 146
Sales No. 90/00085081
ISBN: 978-3-935742-07-8

JUMO platinum temperature sensors

Construction and application of platinum temperature sensors	Data Sheet 90.6000
Platinum-glass temperature sensors	Data Sheet 90.6021
Platinum-ceramic temperature sensors	Data Sheet 90.6022
Platinum-foil temperature sensors	Data Sheet 90.6023
Platinum-glass temperature sensors with glass extension	Data Sheet 90.6024
Platinum-chip temperature sensors with connecting wires	Data Sheet 90.6121
Platinum-chip temperature sensors on epoxy card	Data Sheet 90.6122
Platinum-chip temperature sensors with terminal clamps	Data Sheet 90.6123
Platinum-chip temperature sensors in cylindrical style	Data Sheet 90.6124
Platinum-chip temperature sensors in SMD style	Data Sheet 90.6125

10.06/00415559

JUMO GmbH & Co. KG
Delivery address: Mackenrodtstraße 14, 36039 Fulda, Germany
Postal address: 36035 Fulda, Germany
Phone: +49 661 6003-0
Fax: +49 661 6003-607
e-mail: mail@jumo.net
Internet: www.jumo.net

JUMO Instrument Co. Ltd.
JUMO House
Temple Bank, Riverway
Harlow, Essex CM20 2DY, UK
Phone: +44 1279 635533
Fax: +44 1279 635262
e-mail: sales@jumo.co.uk
Internet: www.jumo.co.uk

JUMO Process Control, Inc.
8 Technology Boulevard
Canastota, NY 13032, USA
Phone: 315-697-JUMO
1-800-554-JUMO
Fax: 315-697-5867
e-mail: info@jumo.us
Internet: www.jumo.us

Platinum-chip temperature sensors in SMD style on epoxy card to EN 60 751

PCSE style

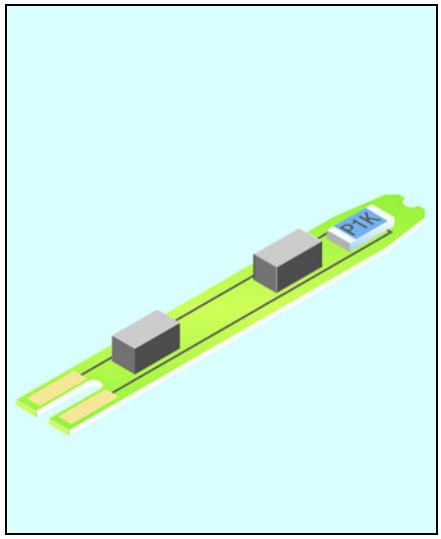

Brief description

The PCSE style greatly facilitates the fabrication of different probe variations with connecting cable, having been conceived especially as a measuring insert.

The pre-assembled measuring insert with the SMD temperature sensor can be inserted directly into a protection fitting, after soldering on a connecting cable. The card largely protects the temperature sensor against damage. This construction eliminates any tilting of the temperature sensor as well as the bending and short-circuiting of connecting wires.

Another advantage of this style is that any possible tension on the connecting cable cannot be directly transmitted to the SMD temperature sensor. Furthermore, the thin tracks between the connection contact and temperature sensor minimize wrong measurements caused by heat conduction. In addition, the measuring inserts specified provide the possibility of automated processing, enabling a reduction in production costs.

PCSE style platinum-chip temperature sensors are available as Pt100, Pt500 and Pt1000 measuring inserts. The application temperature spans -20 to +150°C. Please note that, for design reasons, such measurement inserts can only be delivered as a complete panel (also see Technical data).

Temperature sensors in cardboard box packaging

	Temperature sensor				Sales No. for tolerance class		
Type	R_0/Ω	B	L	H	1/3 DIN B	A	B
PCSE 1.4315.1	1x100	4.3	15	2.2	-	-	90/00419974
PCSE 1.4315.5	1x500	4.3	15	2.2	-	-	on request
PCSE 1.4315.10	1x1000	4.3	15	2.2	-	-	90/00404832
PCSE 1.4328.1	1x100	4.3	28	2.2	-	-	90/00360388
PCSE 1.4328.5	1x500	4.3	28	2.2	-	-	90/00360391
PCSE 1.4328.10	1x1000	4.3	28	2.2	-	-	90/00374858

Dim. tolerances: $\Delta B = \pm 0.2$ / $\Delta L = \pm 0.5$ / $\Delta H = \pm 0.2$
Dimensions in mm.

For a definition of the tolerance classes, see Data Sheet 90.6000

Dimensional drawing

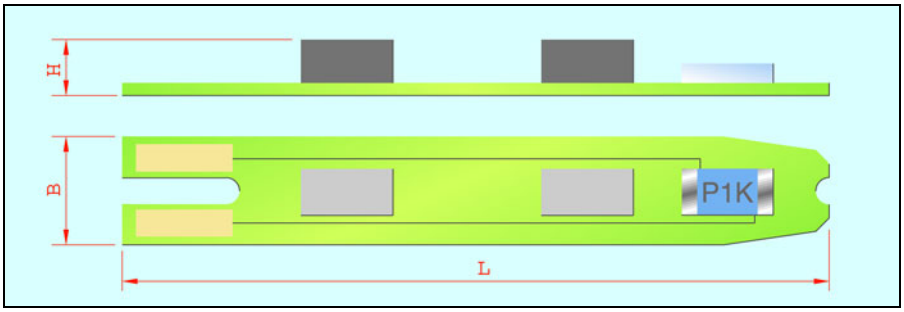

JUMO GmbH & Co. KG
Delivery address: Mackenrodtstraße 14, 36039 Fulda, Germany
Postal address: 36035 Fulda, Germany
Phone: +49 661 6003-0
Fax: +49 661 6003-607
e-mail: mail@jumo.net
Internet: www.jumo.net

JUMO Instrument Co. Ltd.
JUMO House
Temple Bank, Riverway
Harlow, Essex CM20 2DY, UK
Phone: +44 1279 635533
Fax: +44 1279 635262
e-mail: sales@jumo.co.uk
Internet: www.jumo.co.uk

JUMO Process Control, Inc.
8 Technology Boulevard
Canastota, NY 13032, USA
Phone: 315-697-JUMO
1-800-554-JUMO
Fax: 315-697-5867
e-mail: info@jumo.us
Internet: www.jumo.us

Technical data

Standard EN 60 751

Temperature coefficient $\alpha = 3.850 \times 10^{-3}\,°C^{-1}$ (between 0 and 100 °C)

Temperature range -20 to +150 °C

Tolerance Temperature validity range Class B: -20 to +150 °C

Measuring current

Pt100	recommended: 1.0 mA
Pt500	recommended: 0.7 mA
Pt1000	recommended: 0.1 mA

Maximum current

Pt100	7.0 mA
Pt500	3.0 mA
Pt1000	1.0 mA

Operating conditions Platinum-chip temperature sensors may not be used unprotected in humid ambient conditions or corrosive atmospheres. The user may have to carry out some checks before operation.
Please also refer to the Installation Instructions B 90.6121.4 "Notes on the application of platinum-chip temperature sensors."

Long-term stability max. R_0 drift 0.05 %/year (see Data Sheet 90.6000 for definitions)

Insulation resistance >10 MΩ at room temperature

Self-heating $\Delta t = I^2 \times R \times E$ (see Data Sheet 90.6000 for definitions)

Packaging For design reasons, the measuring inserts can only be delivered as a complete panel. The individual cards are wrapped in film and delivered packed in a cardboard box. One panel contains the following quantity of temperature sensors:
Type: PCSE 1.4315.x = 132 items, Type: PCSE 1.4328.x = 99 items

Storage In the standard packaging, JUMO temperature sensors, PCSE style, can be stored for at least 12 months under normal ambient conditions. It is not permissible to store the sensors in aggressive atmospheres, corrosive media, or in high humidity.

Self-heating coefficients and response times

Type	Self-heating coefficient E in °C/mW		Response times in seconds			
	in water (v = 0.2 m/sec)	in air (v = 2 m/sec)	in water (v = 0.4 m/sec)		in air (v = 1 m/sec)	
			$t_{0.5}$	$t_{0.9}$	$t_{0.5}$	$t_{0.9}$
PCSE 1.4315.1	0.03	0.4	0.2	0.4	3	9
PCSE 1.4315.5	0.03	0.4	0.2	0.4	3	9
PCSE 1.4315.10	0.03	0.4	0.2	0.4	3	9
PCSE 1.4328.1	0.03	0.4	0.2	0.4	3	9
PCSE 1.4328.5	0.03	0.4	0.2	0.4	3	9
PCSE 1.4328.10	0.03	0.4	0.2	0.4	3	9

JUMO GmbH & Co. KG
Delivery address: Mackenrodtstraße 14
36039 Fulda, Germany
Postal address: 36035 Fulda, Germany
Phone: +49 661 6003-0
Fax: +49 661 6003-607
E-mail: mail@jumo.net
Internet: www.jumo.net

JUMO Instrument Co. Ltd.
JUMO House
Temple Bank, Riverway
Harlow, Essex CM20 2DY, UK
Phone: +44 1279 635533
Fax: +44 1279 635262
E-mail: sales@jumo.co.uk
Internet: www.jumo.co.uk

JUMO Process Control, Inc.
8 Technology Boulevard
Canastota, NY 13032, USA
Phone: 315-697-5866
1-800-554-JUMO
Fax: 315-697-5867
E-mail: info.us@jumo.net
Internet: www.jumousa.com

Platinum-chip temperature sensors with terminal clamps to EN 60751

- **for temperatures from -30 to +105 °C**
- **standardized nominal values and tolerances**
- **with the nominal values 100 and 1000 Ω**
- **stable terminal clamps**
- **coated with an additional protective varnish**

PCKL style

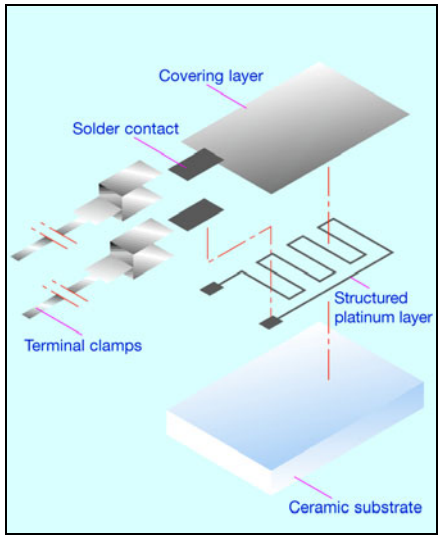

Introduction

PCKL style platinum-chip temperature sensors are manufactured in the same way as the standard PCA style thin-film sensors. However, there are some differences in the connecting wire techniques. Compared with the standard temperature sensors, these sensors do not feature bonded connecting wires, but have terminal clamps that are pushed on and soldered on.
The terminal clamps are distinguished by their exceptionally high directional and bending strength.
In addition, all JUMO temperature sensors with terminal clamps are coated with an additional protective varnish, which makes them ideally suited to a variety of probe constructions used in the HVAC sector.
The application temperature ranges from -30 to +105°C.

Technical publication

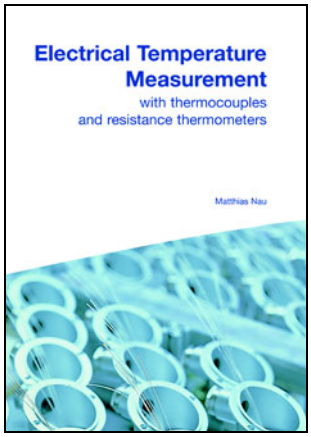

This revised edition takes account of altered standards and recent developments. The new chapter "Measurement uncertainty" incorporates the basic concept of the internationally recognized ISO guideline "Guide to the expression of uncertainty in measurement" (abbreviated: GUM).
In addition, the chapter on explosion protection for thermometers has been updated in view of the European Directive 94/9/EC, which has been in force since 1st July 2003.

August 2002
Publication FAS 146
Part no. 00085081
ISBN: 978-3-935742-07-8

JUMO platinum temperature sensors

Construction and application of platinum temperature sensors	Data Sheet 906000
Platinum-ceramic temperature sensors	Data Sheet 906022
Platinum-chip temperature sensors with connecting wires	Data Sheet 906121
Platinum-chip temperature sensors on epoxy card	Data Sheet 906122
Platinum-chip temperature sensors with terminal clamps	Data Sheet 906123
Platinum-chip temperature sensors in cylindrical style	Data Sheet 906124
Platinum-chip temperature sensors in SMD style	Data Sheet 906125

2012-10-23/00415563

JUMO GmbH & Co. KG
Delivery address: Mackenrodtstraße 14
36039 Fulda, Germany
Postal address: 36035 Fulda, Germany
Phone: +49 661 6003-0
Fax: +49 661 6003-607
E-mail: mail@jumo.net
Internet: www.jumo.net

JUMO Instrument Co. Ltd.
JUMO House
Temple Bank, Riverway
Harlow, Essex CM20 2DY, UK
Phone: +44 1279 635533
Fax: +44 1279 635262
E-mail: sales@jumo.co.uk
Internet: www.jumo.co.uk

JUMO Process Control, Inc.
8 Technology Boulevard
Canastota, NY 13032, USA
Phone: 315-697-5866
1-800-554-JUMO
Fax: 315-697-5867
E-mail: info.us@jumo.net
Internet: www.jumousa.com

Platinum-chip temperature sensors with terminal clamps to EN 60751

PCKL style

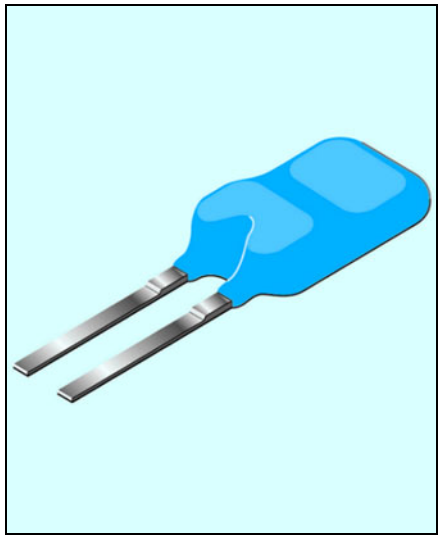

Brief description

PCKL style platinum-chip temperature sensors feature especially rigid terminal clamps for the electrical connection. One particular advantage is their high bending strength. Furthermore, the rectangular cross-section of the terminal clamps ensures excellent directional stability of the temperature sensor when assembled.
The entire temperature sensor including the solder joint is additionally coated with epoxy protective varnish, as a protection against condensation and external effects.
PCKL style platinum-chip temperature sensors lend themselves ideally to a variety of probes for use in the HVAC sector and, since the sensor is openly positioned in the air stream.
Of course, all the positive characteristics of platinum-temperature sensors such as standardized nominal values to EN 60751, high long-term stability and good reproducibility of the electrical properties also apply to this style, thereby ensuring universal usability and interchangeability.

Temperature sensors packed in bags

Temperature sensor					Connecting wire					Part no. for tolerance class		
Type	R_0/Ω	B	L	H	Material	Dim.	L1	L2	R_L in mΩ/mm	F0.1 (1/3 DIN B)	F0.15 (DIN A)	F0.3 (DIN B)
PCKL 1.4005.1	1 × 100	4.5	15.8	1.9	CuSn6	0.55 × 0.25	7	1.9	1.0	00474119T	on request	00480911T
PCKL 1.4005.10	1 × 1000	4.5	15.8	1.9	CuSn6	0.55 × 0.25	7	1.9	1.0	00457334T	on request	00480913T

Dim. tolerances: ΔB = ±0.3 / ΔL = ±0.8 / ΔH = ±0.3 / Dim. = approx. dim. / ΔL1 = +1.6 / ΔL2 = ±0.2
Dimensions in mm.

For a definition of the tolerance classes, see Data Sheet 906000
T = bag

Dimensional drawing

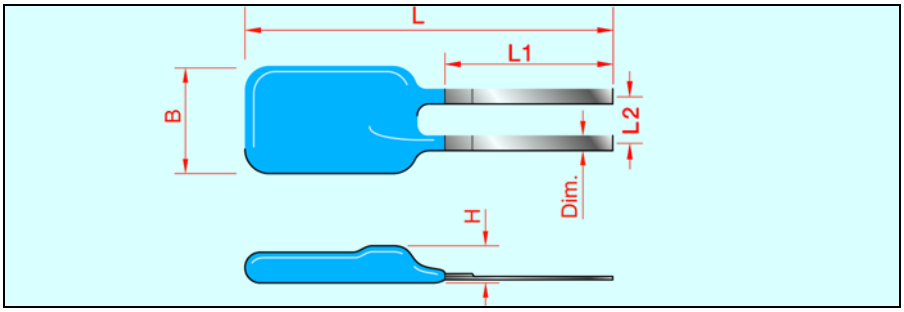

JUMO GmbH & Co. KG
Delivery address: Mackenrodtstraße 14
36039 Fulda, Germany
Postal address: 36035 Fulda, Germany
Phone: +49 661 6003-0
Fax: +49 661 6003-607
E-mail: mail@jumo.net
Internet: www.jumo.net

JUMO Instrument Co. Ltd.
JUMO House
Temple Bank, Riverway
Harlow, Essex CM20 2DY, UK
Phone: +44 1279 635533
Fax: +44 1279 635262
E-mail: sales@jumo.co.uk
Internet: www.jumo.co.uk

JUMO Process Control, Inc.
8 Technology Boulevard
Canastota, NY 13032, USA
Phone: 315-697-5866
1-800-554-JUMO
Fax: 315-697-5867
E-mail: info.us@jumo.net
Internet: www.jumousa.com

Technical data

Standard	EN 60751
Temperature coefficient	$\alpha = 3.850 \times 10^{-3}\,°C^{-1}$ (between 0 and 100 °C)
Temperature range	-30 to +105 °C
Tolerance	Temperature validity range class F0.1 (1/3 DIN B): -30 to +105 °C Temperature validity range class F0.3 (DIN B): -30 to +105 °C
Measuring current/Maximum current	Pt100 recommended: 1.0 mA, maximum: 1.8 mA Pt1000 recommended: 0.1 mA, maximum: 0.5 mA
Operating conditions	PCKL style platinum-chip temperature sensors are additionally coated with epoxy varnish. The coating offers protection against moisture and condensation. However, in spite of the additional protection against external effects, these temperature sensors may not be used in corrosive atmospheres. The user may have to carry out some checks before operation. **Please also refer to the Installation Instructions B 906121.4 "Notes on the application of platinum-chip temperature sensors."**
Insulating varnish	Epoxy varnish, blue UL approved, UL 94/V0
Terminal clamps	These temperature sensors feature terminal clamps that have been soldered on and are especially rigid. During further processing, it is essential to ensure that the connections are not subjected to lateral pressures. The maximum horizontal tension on the individual terminal clamp may be 10 N. Any kinking or bending of the terminal clamps is not permissible. The raster dimension (wire spacing) is 1.9 mm.
Measurement point	The nominal value specified refers to the standard connecting wire length L1. The measurement is acquired 2 mm from the open end of the wire. If the wire length is altered, changes in resistance will occur which may result in the tolerance class not being met.
Long-term stability	max. R_0 drift ≤ 0.05 %/year (see Data Sheet 906000 for definitions)
Insulation resistance	> 10 MΩ at room temperature
Vibration strength	see EN 60751, Section 4.4.2
Self-heating	$\Delta t = I^2 \times R \times E$ (see Data Sheet 906000 for definitions)
Packaging	Bag
Storage	In the standard packaging, JUMO temperature sensors, PCKL style, can be stored for at least 12 months under normal ambient conditions. It is not permissible to store the sensors in aggressive atmospheres, corrosive media, or in high humidity.
RoHS conforming	Yes
REACH conforming	Yes

Self-heating coefficients and response times

Type	Self-heating coefficient E in °C/mW		Response times in seconds			
	in water (v = 0.2 m/sec)	in air (v = 2 m/sec)	in water (v = 0.4 m/sec)		in air (v = 3 m/sec)	
			$t_{0.5}$	$t_{0.9}$	$t_{0.5}$	$t_{0.9}$
PCKL 1.4005.1	0.26	-	0.7	2,4	8,3	20
PCKL 1.4005.10	0.26	-	0.7	2,4	8,3	20

JUMO GmbH & Co. KG
Delivery address: Mackenrodtstraße 14
36039 Fulda, Germany
Postal address: 36035 Fulda, Germany
Phone: +49 661 6003-0
Fax: +49 661 6003-607
Email: mail@jumo.net
Internet: www.jumo.net

JUMO Instrument Co. Ltd.
JUMO House
Temple Bank, Riverway
Harlow, Essex, CM20 2DY, UK
Phone: +44 1279 63 55 33
Fax: +44 1279 62 50 29
Email: sales@jumo.co.uk
Internet: www.jumo.co.uk

JUMO Process Control, Inc.
6733 Myers Road
East Syracuse, NY 13057, USA
Phone: +1 315 437 5866
Fax: +1 315 437 5860
Email: info.us@jumo.net
Internet: www.jumousa.com

Platinum-chip temperature sensors in SMD design type according to DIN EN 60751:2009 / IEC 60751:2008

- For temperatures from -50 to +150 °C (-70 to +250 °C)
- In accordance with DIN EN 60751, nominal values Pt100, Pt500, and Pt1000
- Tolerance classes F0.1, F0.15, F0.3 (standard) and F0.6
- SMD design type 1206 (3216M) and 0805 (2012M)
- Gold-plated nickel solder contact
- Solderability according to IEC / DIN EN 60068-2-58
- Belt packaging according to DIN IEC 60286-3
- High load capacity

Introduction

Platinum-chip temperature sensors belong to the category of thin-film technology temperature sensors. During the manufacturing of these temperature sensors, a thin layer of platinum is deposited on a substrate of ultrapure aluminum oxide ceramic and structured in a meander-style pattern.
The temperature sensors are based on a temperature-dependent resistance, the curve and admissible tolerance of which are defined in the international standard IEC 60751:2008. The thin-film technology used enables the production of particularly small and robust design types.
The favorable, linear characteristic curve, the wide temperature measuring range, and high measuring accuracy, together with outstanding long-term stability, make these standardized temperature sensors the ideal choice.

JUMO platinum temperature sensors

Construction and application of platinum temperature sensors	Data sheet 906000
Platinum-ceramic temperature sensors	Data sheet 906022
Platinum-chip temperature sensors with connection wires	Data sheet 906121
Platinum-chip temperature sensors on circuit boards	Data sheet 906122
Platinum-chip temperature sensors with terminal clamps	Data sheet 906123
Platinum-chip temperature sensors in SMD design type	Data sheet 906125

Design type PCS/PCF

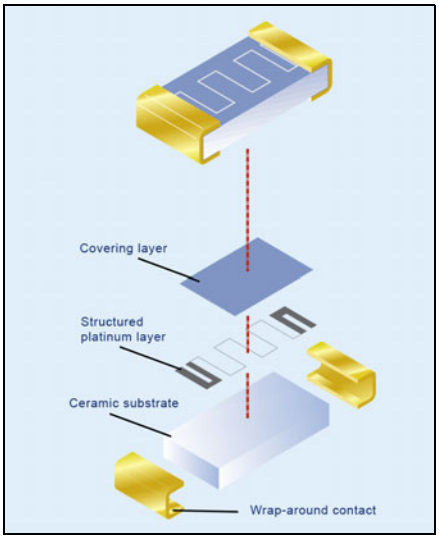

Construction of the SMD temperature sensor (using the example PCS with wrap-around contact)

Technical literature

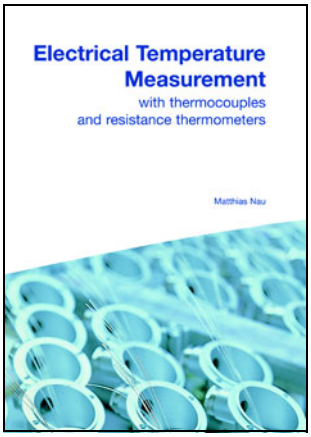

The revised version of this book was reviewed due to changed standards and further developments. The principle of the internationally approved "Guide of the expression of uncertainty in measurement" (abbreviated: GUM) ISO guide is particularly conveyed by the new chapter "Measurement uncertainty". In addition, a chapter on explosion protection for thermometers has been added.

August 2002
Publication FAS 146
Part no.: 00085081
ISBN: 3-935742-07-X

JUMO GmbH & Co. KG
Delivery address: Mackenrodtstraße 14
36039 Fulda, Germany
Postal address: 36035 Fulda, Germany
Phone: +49 661 6003-0
Fax: +49 661 6003-607
Email: mail@jumo.net
Internet: www.jumo.net

JUMO Instrument Co. Ltd.
JUMO House
Temple Bank, Riverway
Harlow, Essex, CM20 2DY, UK
Phone: +44 1279 63 55 33
Fax: +44 1279 62 50 29
Email: sales@jumo.co.uk
Internet: www.jumo.co.uk

JUMO Process Control, Inc.
6733 Myers Road
East Syracuse, NY 13057, USA
Phone: +1 315 437 5866
Fax: +1 315 437 5860
Email: info.us@jumo.net
Internet: www.jumousa.com

Platinum-chip temperature sensors in SMD design type according to DIN EN 60751:2009 / IEC 60751:2008

Type PCS/PCF

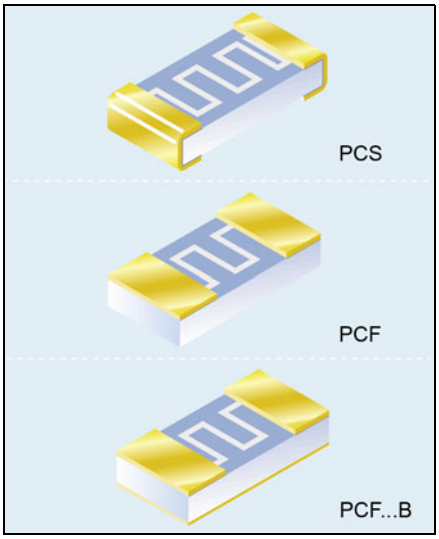

Brief description

Due to their small size, the SMD temperature sensors can be applied at a very high placement density. The sensors are used for surface and ambient temperature measurements on circuit boards. For example, they are frequently applied in temperature monitoring or compensation circuits, as well as an array of applications in temperature probes. Here, an assembled circuit board (data sheet 906122) is used as a measuring insert, which allows for easy installation. Application as a heated resistor for calorimetric measurements is also possible. As well as all forms of reflow soldering, the gold-plated nickel solder contact can also be used with alternative forms of connection technology, such as wave soldering, conductive adhesion, and wired bonds.
The high-quality plating on the contacts also ensures a high level of reliability during operation of the temperature sensor. In order to achieve extra-high resistance to temperature changes, it is important to select a suitable circuit board material with a modified expansion coefficient. In applications with high temperature cycling loads, we recommend using the design type 1302 (0805 or 2012M).
Two baked-in glass covering layers reliably protect the platinum layer of the temperature sensor from external influences.
The temperature sensors are designed for use in temperature ranges from -50 to +150 °C. If suitable connection technology is used, the temperature sensors can even be used in a temperature range from -70 to +250 °C. Adherence to tolerance limits then has to be checked according to the application. The connection technology and housing selected determine the thermal resistance.
The sensors are delivered in belt packaging in standard rolls. Thanks to the high-quality layered structure of the original packaging, they can also be stored for long periods without any issues.
The temperature sensor is available as a wrap-around contact (type PCS) or with one-sided contact (type PCF (flip chip)) for "face-down installation".
The flip chip types (see Fig. Type PCF...B) can be provided with a complete solderable nickel/gold metal layer on the rear/underside. This enables direct thermal contact with another body via a solder connection.

Item overview

Temperature sensor			Material / quantity		Part no. for tolerance class			
Type	Design type	R_0/Ω	Solder connection / material	Packaging unit in belt on reel	F0.1 (Class AA)	F0.15 (Class A)	F0.3 (Class B)	F0.6 (Class 2B)
PCS 1.1302.1M	0805	1×100	Gold-plated nickel	5,000	00647797	00659407	00585849	Upon request
PCS 1.1302.5M	0805	1×500	Gold-plated nickel	5,000	Upon request	Upon request	00649601	Upon request
PCS 1.1302.5M	0805	1×500	Gold-plated nickel	20,000	Upon request	00628428	00585853	Upon request
PCS 1.1302.10M	0805	1×1000	Gold-plated nickel	5,000	00647795	00647798	00649602	00695344
PCS 1.1302.10M	0805	1×1000	Gold-plated nickel	20,000	Upon request	Upon request	00585854	Upon request
PCS 1.1503.1M	1206	1×100	Gold-plated nickel	5,000	00647835	00700543	00585846	Upon request
PCS 1.1503.5M	1206	1×500	Gold-plated nickel	5,000	Upon request	Upon request	00649603	Upon request
PCS 1.1503.5M	1206	1×500	Gold-plated nickel	20,000	Upon request	Upon request	00585847	Upon request
PCS 1.1503.10M	1206	1×1000	Gold-plated nickel	5,000	Upon request	00647834	00649605	Upon request
PCS 1.1503.10M	1206	1×1000	Gold-plated nickel	20,000	Upon request	Upon request	00585848	Upon request
PCF 1.1302.1	0805	1×100	Gold-plated nickel, one-sided contact	5,000	-	-	00674541	-
PCF 1.1302.5	0805	1×500	Gold-plated nickel, one-sided contact	5,000	-	-	00667826	-
PCF 1.1302.10	0805	1×1000	Gold-plated nickel, one-sided contact	5,000	-	-	00674549	-
PCF 1.1302.10B	0805	1×1000	Gold-plated nickel, one-sided contact	5,000	-	-	00713969	00714764

JUMO GmbH & Co. KG
Delivery address: Mackenrodtstraße 14
36039 Fulda, Germany
Postal address: 36035 Fulda, Germany
Phone: +49 661 6003-0
Fax: +49 661 6003-607
Email: mail@jumo.net
Internet: www.jumo.net

JUMO Instrument Co. Ltd.
JUMO House
Temple Bank, Riverway
Harlow, Essex, CM20 2DY, UK
Phone: +44 1279 63 55 33
Fax: +44 1279 62 50 29
Email: sales@jumo.co.uk
Internet: www.jumo.co.uk

JUMO Process Control, Inc.
6733 Myers Road
East Syracuse, NY 13057, USA
Phone: +1 315 437 5866
Fax: +1 315 437 5860
Email: info.us@jumo.net
Internet: www.jumousa.com

Order example:
PCS 1.1302.10M (part no. 00649602) corresponds to temperature sensor Pt1000 and SMD design type 0805.
The tolerance class is indicated in the part no.

Standard packaging according to IEC 60286-3:
- Packaging unit of 5,000 pieces in an 8-mm belt on a 7" plastic reel with roll feed line
- Packaging unit of 20,000 pieces in an 8-mm belt on a 330-mm plastic reel with roll feed line
- Small quantities upon request, without roll feed line

Dimensions

The dimensions are based on the standard DIN EN 140401-801:2014-09; all dimensions are in mm.

Type	**SMD design type Imperial / metric**	**L**	**B**	**H**	**L1**
PCS 1.1302.xM	0805 / 2012M	2.0	1.25	0.4	0.45
PCS 1.1503.xM	1206 / 3216M	3.0	1.50	0.4	0.45
PCF 1.1302.x	0805 / 2012M	2.0	1.25	0.4	0.5
PCF 1.1302.xB	0805 / 2012M	2.0	1.25	0.4	0.5
Dimension tolerances	All	ΔL = +0.2/-0.1	ΔB = +0.2/-0.1	ΔH = ±0.1	ΔL1 = +0.2/-0.2

x = Nominal value ÷ 100 Ω

Dimensional drawing (example design type PCS)

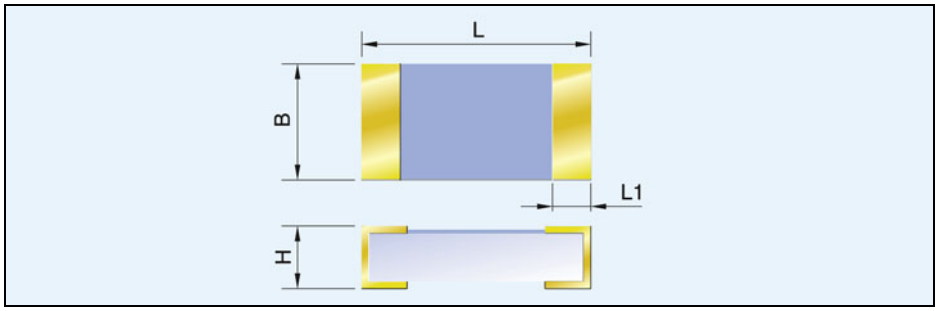

JUMO GmbH & Co. KG
Delivery address: Mackenrodtstraße 14
36039 Fulda, Germany
Postal address: 36035 Fulda, Germany
Phone: +49 661 6003-0
Fax: +49 661 6003-607
Email: mail@jumo.net
Internet: www.jumo.net

JUMO Instrument Co. Ltd.
JUMO House
Temple Bank, Riverway
Harlow, Essex, CM20 2DY, UK
Phone: +44 1279 63 55 33
Fax: +44 1279 62 50 29
Email: sales@jumo.co.uk
Internet: www.jumo.co.uk

JUMO Process Control, Inc.
6733 Myers Road
East Syracuse, NY 13057, USA
Phone: +1 315 437 5866
Fax: +1 315 437 5860
Email: info.us@jumo.net
Internet: www.jumousa.com

Technical data

Standard	DIN EN 60751:2009 / IEC 60751/2008
Temperature coefficient	$\alpha = 3.850 \times 10^{-3}\ °C^{-1}$ (between 0 and 100 °C)
Temperature range	Nominal temperature -50 to +150 °C, expanded temperature range -70 to +250 °C
Tolerance	Temperature validity range class F0.1 (class AA): 0 to 150 °C Temperature validity range class F0.15 (class A): -30 to +150°C Temperature validity range class F0.3 (class B): -50 to +250 °C Temperature validity range class F0.6 (class 2B): -70 to +250 °C
Measuring/maximum current	Pt100: recommend 1.0 mA, maximum 7.0 mA Pt500: recommend 0.7 mA, maximum 3.0 mA Pt1000: recommend 0.1 mA, maximum 1.0 mA
Self-heating	$\Delta t = I^2 \times R \times E$ (see data sheet 906000 for definitions)
Self-heating coefficient E	Type — In water (0 °C, v ≥ 0.2 m/s), fitted as RTD temperature probe PCS/PCF 1.1302 (0805) — 0.15 K/mW PCS/PCF 1.1503 (1206) — 0.09 K/mW
Response times	Type — In water (v = 0.4 m/s): $t_{0.5}$, $t_{0.9}$ — In air (v = 1 m/s): $t_{0.5}$ PCS/PCF 1.1302 (0805) — 0.1 s, 0.3 s, 2.6 s PCS/PCF 1.1503 (1206) — 0.1 s, 0.3 s, 3.3 s
Stability at maximum temperature	1000 h at 160 °C in air: measured value drift ΔT_0 < 100 mK
Long-term stability	Max. drift ≤ 0.05 % per year (for definition, see data sheet 906000)
Processing	Reflow soldering, lead-free and leaded, see "Processing notes" The user must adapt the soldering profile. Only circuit boards with suitable coefficients of thermal expansion are admissible. Type PCF (flip chip): Depending on the solder used, it may be necessary to adapt the printed solder quantity compared to a sensor/component with wrap-around contact. Application of the metallized top side: Optimized for soft-soldering in a reflow method.
Solder connections	Gold-plated nickel solder contact, thickness of nickel layer ≥ 1 µm, gold ≥ 40 nm, solderability according to IEC / DIN EN 60068-2-58: Class 3 soldering process "Higher temperatures", solder Sn96.5Ag3.0Cu0.5, Solder profile according to IEC / DIN EN 60068-2-58 / Figure 2b / Table 3 / Table 1 Resistance to dissolution according to IEC / DIN EN 60068-2-58: Class 3 soldering process "Higher temperatures", solder Sn96.5Ag3.0Cu0.5, Solder profile according to IEC / DIN EN 60068-2-58 / Figure 2b / Table 4
Operating conditions	Platinum-chip temperature sensors must be protected when used in a humid environment or in aggressive atmospheres. The user may have to carry out some checks before using the sensors. **Please also refer to the installation instructions B 906121.4 "Information for the application of platinum-chip temperature sensors."**
Storage	In the original unopened belt packaging, JUMO temperature sensors of PCS/PCF design type can be stored for at least 5 years under normal ambient conditions. Storage in an aggressive atmosphere or in corrosive or reductive media or under high air humidity is not permitted.
Shearing strength of soldered connection	Tested as JUMO PCSE module (data sheet 906122): According to IEC 62137-1-2:2007; temperature cycling a) Rapid change of temperature; test Na, defined in IEC 60068-2-14 b) Lower temperature (TA) -40 °C, upper temperature (TB) +125 °C c) Dwell time at TA and TB, 10 minutes each d) Number of temperature cycles: 1000 0 cycles F ≥ 17.7 N, 1000 cycles F ≥ 8 N
ESD	Typically ≥ 2 kV, HBM (direct contact), soldered onto circuit board as module according to data sheet 906122, in accordance with AEC - Q200-002 Level 2
Compliant with RoHS 2011/65/EU and 2015/863/EU	Yes
Compliant with REACH 1907/2006	Yes

JUMO GmbH & Co. KG
Delivery address: Mackenrodtstraße 14
36039 Fulda, Germany
Postal address: 36035 Fulda, Germany
Phone: +49 661 6003-0
Fax: +49 661 6003-607
Email: mail@jumo.net
Internet: www.jumo.net

JUMO Instrument Co. Ltd.
JUMO House
Temple Bank, Riverway
Harlow, Essex, CM20 2DY, UK
Phone: +44 1279 63 55 33
Fax: +44 1279 62 50 29
Email: sales@jumo.co.uk
Internet: www.jumo.co.uk

JUMO Process Control, Inc.
6733 Myers Road
East Syracuse, NY 13057, USA
Phone: +1 315 437 5866
Fax: +1 315 437 5860
Email: info.us@jumo.net
Internet: www.jumousa.com

Processing notes

All forms of reflow soldering are preferred. The temperature sensors could be damaged when soldering with a soldering iron. The manufacturer has tested lead-free SAC solder as well as leaded standard solder (up to 95 % Pb). The soldering temperature can be raised slightly in comparison to tin-plated components.
Type PCF (flip chip): Depending on the solder used, it may be necessary to adapt the printed solder quantity compared to a sensor/component with wrap-around contact.
Application of the metallized top side: Optimized for soft-soldering in a reflow method.

Recommended pad dimensions on the circuit board

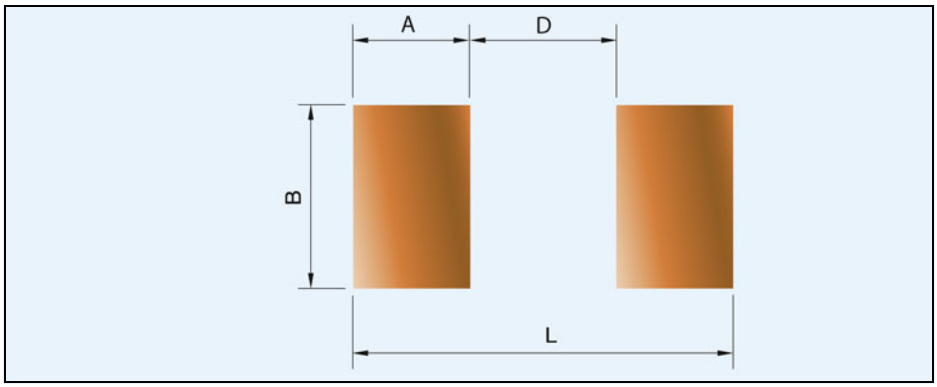

Type	SMD design type (imperial)	SMD design type (metric)	A	B	D	L
PCS 1.1302.xM	0805	2012M	0.80	1.25	1.0	2.6
PCS 1.1503.xM	1206	3216M	0.80	1.50	2.0	3.6
PCF 1.1302.x	0805	2012M	0.65	1.25	0.9	2.2

All measurements in mm.
x = Nominal value ÷ 100 Ω

Recommended soldering profile for lead-free solder, type SAC 305/405

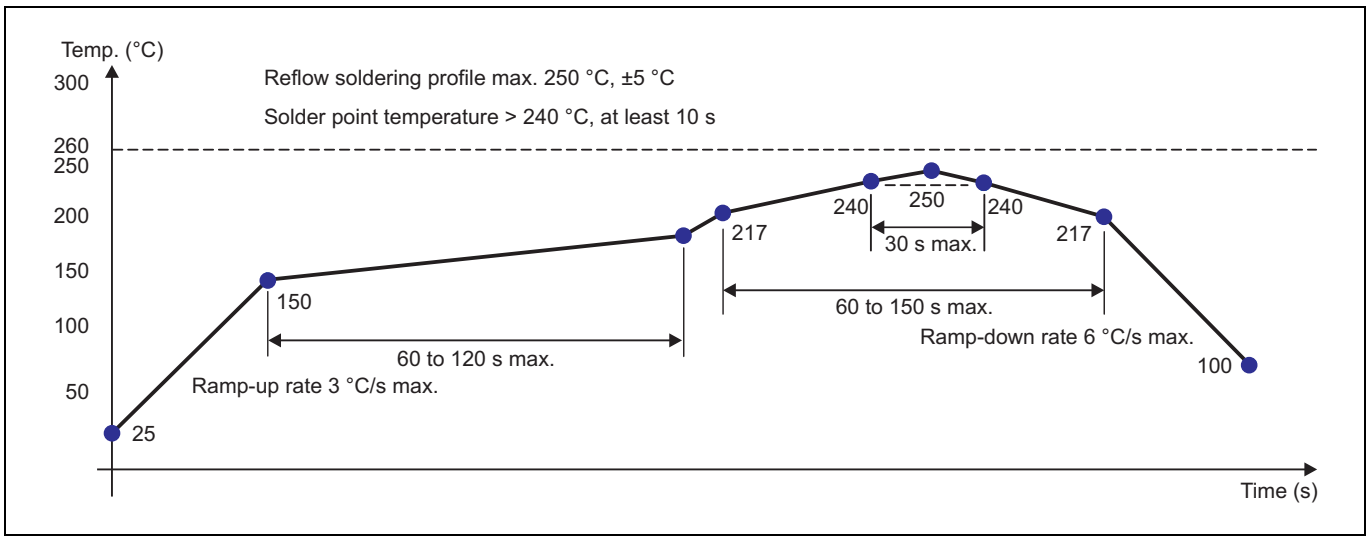

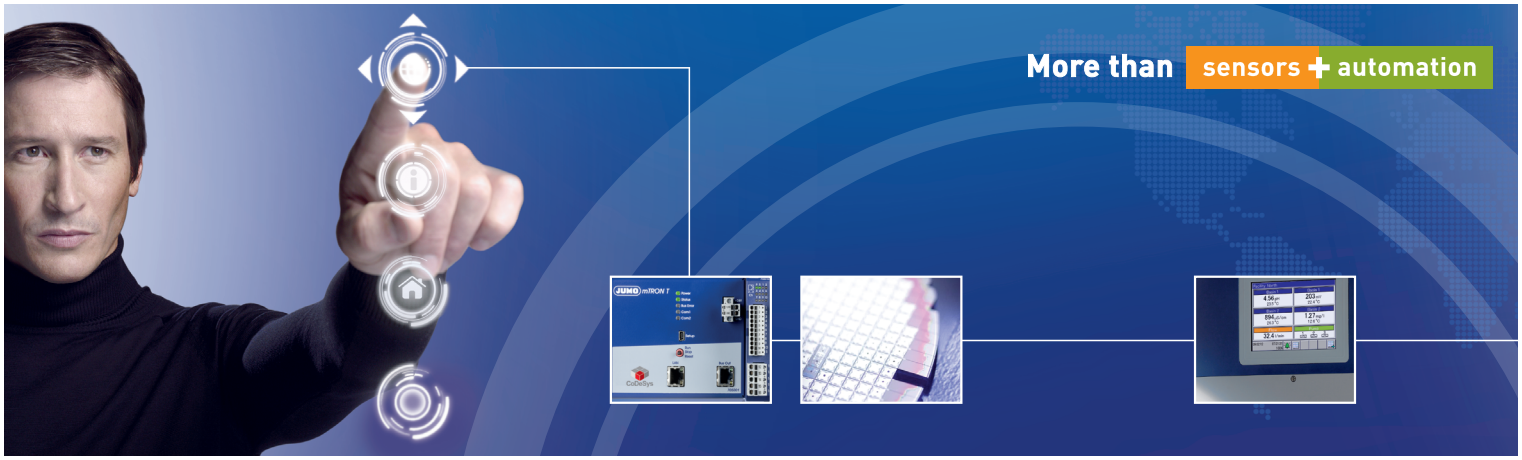

www.jumo.net

Worldwide close to the customer ...

... is JUMO rooted in tradition.

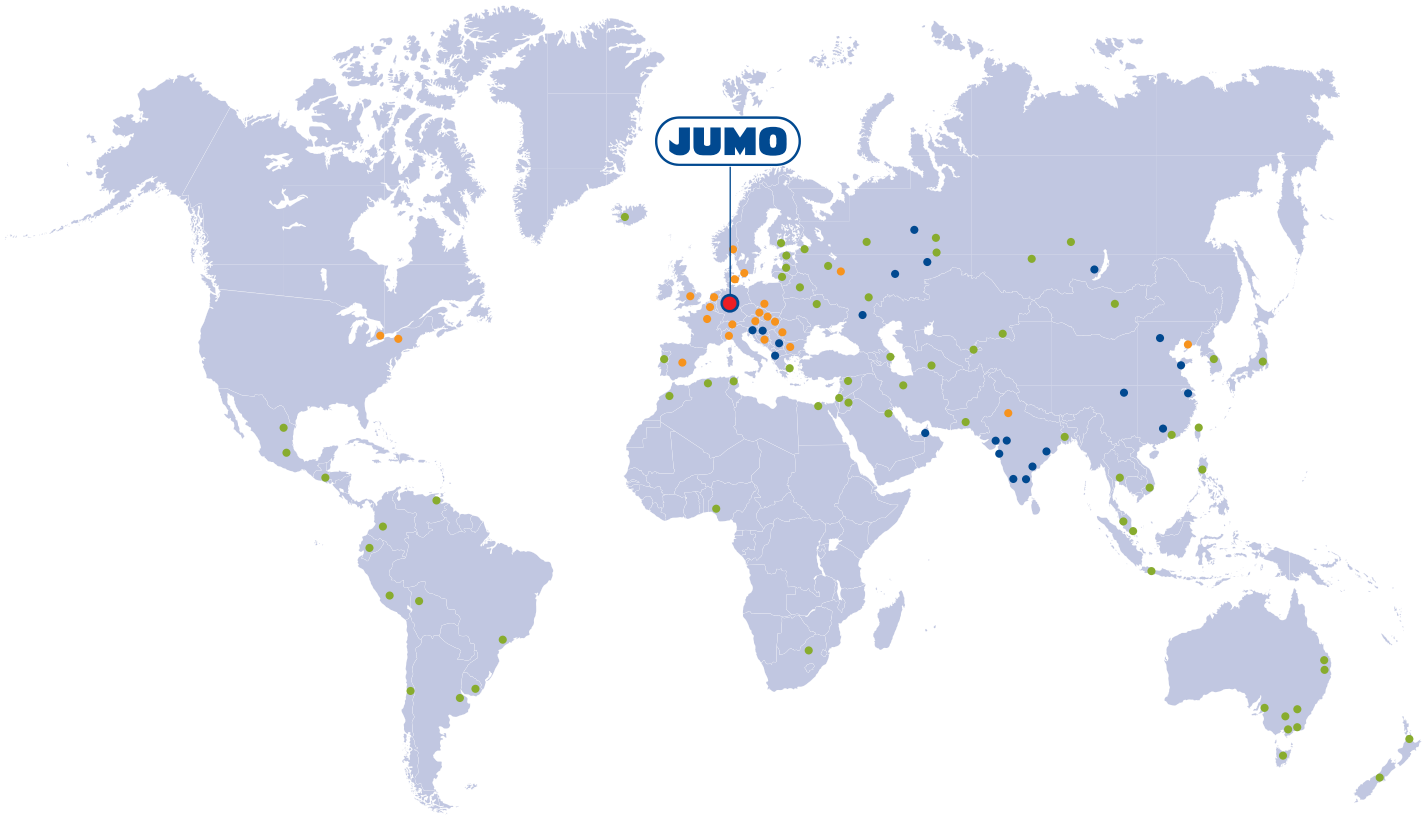

Head office in Fulda (Germany) · Subsidiary · Field office · Agency

Temperature · Liquid analysis · Pressure · Level · Flow · Humidity · Control · Recording · Automation · Monitoring

JUMO

www.jumo.net