Temperature measurement

Easytemp TMR31/35

Compact thermometers for a wide range of applications.


TMR31


TMR35

- Small, compact design
- Variable insertion lengths
- Simple installation and commissioning
- Breakdown information in event of short-circuit
- 3-A approval (TMR35)

Easytemp TMR31/35 are the latest in Endress+Hauser's range of cost-effective compact thermometers. Characterised by simplicity and compact construction, both TMR31 and TMR35 are quick and easy to install and operate, offering good accuracy and response times.

With a temperature capability range of -50...200°C, the Easytemp range is suitable for a wide range of applications. The TMR31 has been designed for all general applications across the process industries, whilst the TMR35 has been specially designed for hygienic applications, offering 3-A certification and a choice of hygienic process connections.

Technical data

Input	:	Pt100: -50...150°C without neck, -50...200°C with neck
Output	:	Standard: Pt100, class A, 4-wire as option: 4...20mA or 20...4mA
Operation	:	PC-programmable (PCP) if electronics option is available
Supply voltage	:	10...35VDC
Product temperature	:	-40°C...+200°C
Process connections	:	TMR31: compression fitting, G¼", G½" TMR35: various Triclamp

Easytemp TMR31

Dimensions (mm)

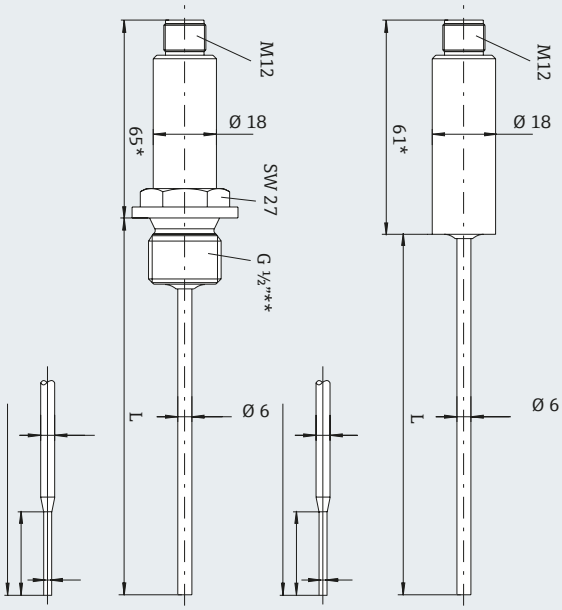

L = Choice of length from 30 to 300 mm
* neck extention version plus 35 mm
** Available process connections: ¼"-½"G of NPT, M14×1,5; M18×1,5

Easytemp TMR35

Dimensions (mm)

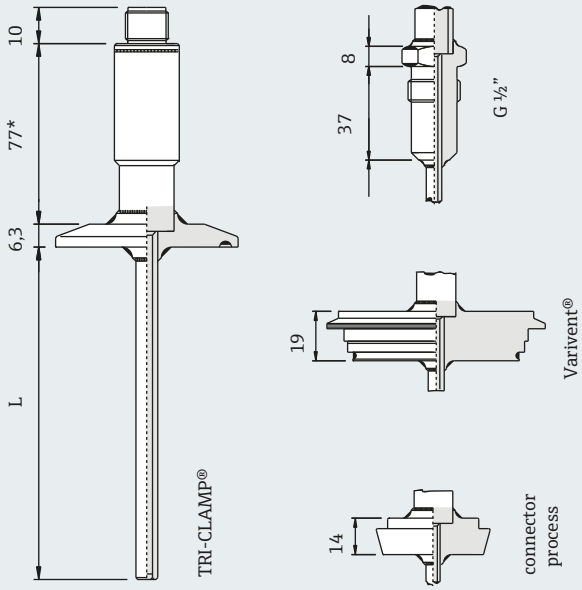

L = Choice of length from 30 to 300 mm
* neck extention version plus 35 mm

- For more information, specific application advice or to order, please contact us on **0161 286 5000** or email: **info@uk.endress.com**
- To download technical documentation, please visit our website: www.uk.endress.com
- For product selection help, try our online Application tool: www.uk.endress.com/applicator

Thermophant T TTR31/35

Cost-effective temperature switches for process and hygienic applications.

TTR31

TTR35

- Complete stainless steel housing
- With display
- Simple pushbutton programming
- High reproducibility and long-term stability
- Maintenance-free

The Thermophant T temperature switch offers accurate monitoring, display and control of process temperatures from -50...+150°C in liquid, gas, steam and dust. Its stainless steel housing offers significant protection against chemical corrosion and mechanical abrasion for increased longevity and performance. What's more, the housing can be rotated 340°C and can be easily adjusted on-site for maximum versatility. The user-friendly Thermophant T offers pushbutton operation and a backlit digital display for easy reading at all times.

Thermophant T is ideal for use in a wide range of applications, from the control of pumps and compressors to bottling plants and filling machines, as it has a fast response time and hygienic process connections are available for food and pharmaceutical processes (TTR35). DESINA compliance comes as standard.

Technical data

Supply voltage	: 12...30V DC
Maximum load	: <250mA
Voltage drop	: <2V
Ambient temperature	: -40°C...+85°C
Product temperature	: -50°C...+150°C
Operating pressure	: -1 bar...+16 bar
Material	: Stainless steel 316L
Response time	: t_{50} = 10s
Protection	: IP65

Thermophant T TTR31 dimensions (mm)

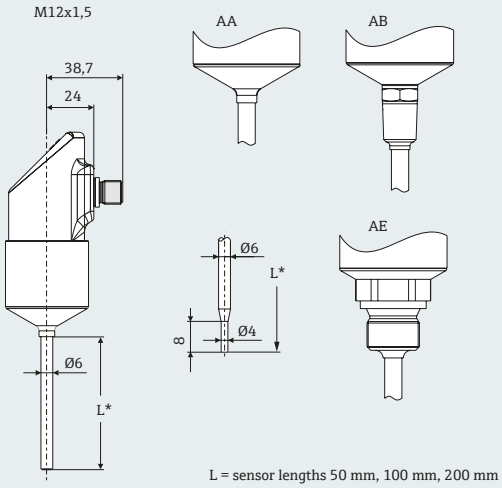

L = sensor lengths 50 mm, 100 mm, 200 mm

Thermophant T TTR35 dimensions (mm)

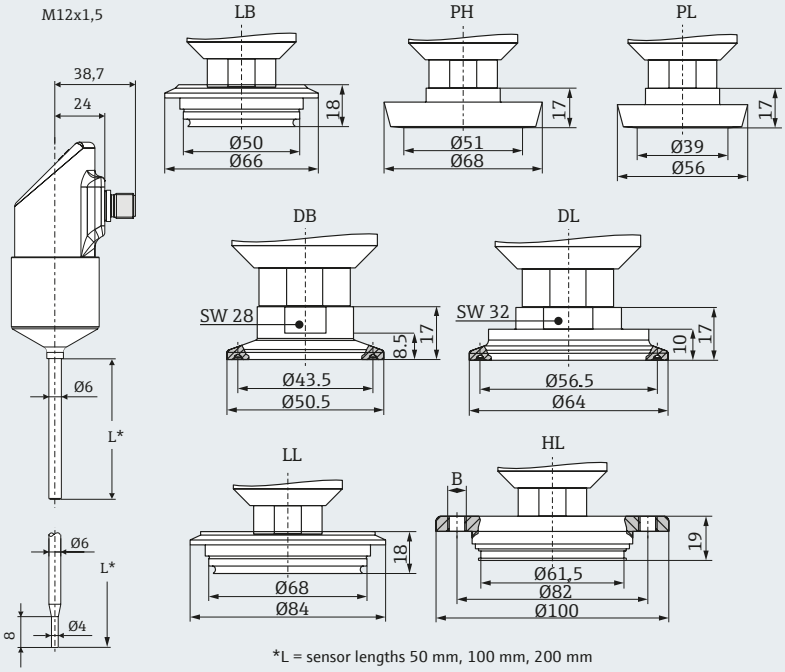

*L = sensor lengths 50 mm, 100 mm, 200 mm

- For more information, specific application advice or to order, please contact us on **0161 286 5000** or email: **info@uk.endress.com**
- To download technical documentation, please visit our website: www.uk.endress.com
- For product selection help, try our online Application tool: www.uk.endress.com/applicator

Omnigrad M TR10/11/12/13/15

Resistance temperature sensors for general industrial applications.

WirelessHART

- Customised immersion length
- Replaceable mineral insulated insert
- Double Pt100 for redundancy

The Omnigrad M TR10...15 range of temperature sensors are resistance thermometers designed for use in the fine chemicals industry, but are also suitable for general applications and are ATEX certified for hazardous area use. They are made up of a measurement probe with a protection well and a housing, which may contain the transmitter for conversion of the variable measured.

Due to its modular configuration and the structure defined by the DIN 43772 standard (form 2G/3G), the Omnigrad M range is suitable for most industrial processes.

Applications

- Fine chemicals industry
- Light energy industry
- General industrial services

Technical data

	TR10	TR11	TR12	TR13	TR15
Version :	With neck in accordance with DIN	Without neck	Without neck	With neck (flanged) in accordance with EN1092	With neck
Thermowell diameter :	9, 11, 12mm	9, 11, 12mm	9, 11, 12mm	9, 11, 12mm	24mm
Thermowell material :	316Ti, 316L, Hastelloy C	316Ti, 316L	316Ti, 316L	316Ti, 316L, Hastelloy C	316Ti

Installation

A and B: In small nominal bore pipes, the tip should reach or extend slightly past the centre line of the pipe (= L).
C and D: Angled installation.

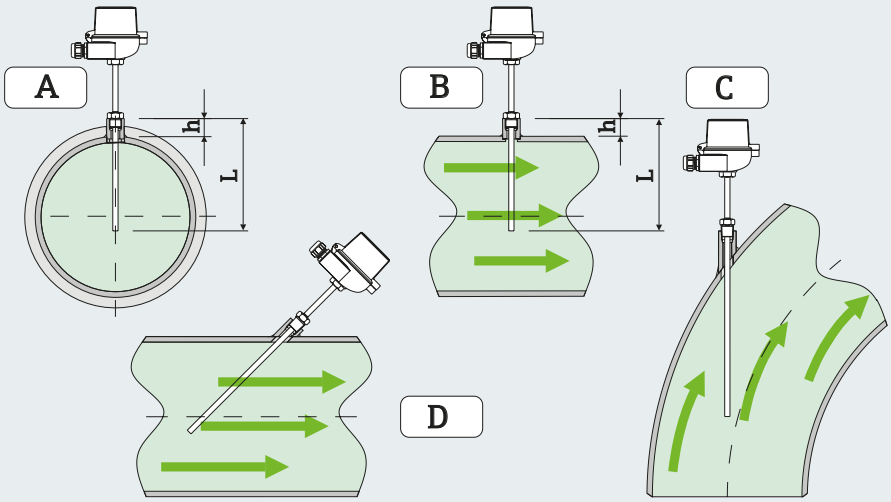

Response times

Response times for TR10-13

Test in water at 0.4m/s according to IEC 60751; 10 K temperature step change. Measuring probe Pt100, TF/WW.				
Protection tube				
Diameter	Response time	Reduced tip: Ø 5.3mm	Tapered tip: Ø 6.6mm or Ø 9mm	Straight tip
9 x 1mm	t_{50}	7.5s	11s	18s
	t_{90}	21s	37s	55s
11 x 2mm	t_{50}	7.5s	not available	18s
	t_{90}	21s	not available	55s
12 x 2.5mm	t_{50}	not available	11s	38s
	t_{90}	not available	37s	125s

Response times for TR15

Test in water at 0.4m/s according to IEC 60751; 10 K temperature step change. Measuring probe Pt100, TF/WW.					
Thermowell, U = length of tapered tip					
Outer-Ø	Response time	U = 65/73mm	U = 125/133mm	U = 275mm	Outer-Ø (tapered tip)
18mm	t_{50}	22s	22s	-	9mm
	t_{90}	60s	60s	-	
24mm	t_{50}	31s	31s	31s	12.5mm
	t_{90}	96s	96s	96s	

- For more information, specific application advice or to order, please contact us on **0161 286 5000** or email: **info@uk.endress.com**
- To download technical documentation, please visit our website: www.uk.endress.com
- For product selection help, try our online Application tool: www.uk.endress.com/applicator

Omnigrad T TR24/25

Fast-response resistance thermometers for all process applications.

TR24

TR25

WirelessHART

- Stainless steel wetted parts
- Reduced diameter probe end for fast response
- ATEX certification

Omnigrad T TR24 and TR25 temperature sensors are resistance thermometers suitable for almost all industrial processes and generic applications thanks to their modular structure. They are simple sensors without thermowells.

Applications

- Fine chemicals
- Power industry
- Environmental industry
- General processes

Technical data

	TR24	TR25
Measuring range	Thin film: -50...+400°C wire wound: -200...+600°C	Thin film: -50...+400°C wire wound: -200...+600°C
Insulation	Insulation resistance between terminals and probe sheath: more than 100MΩ at 25°C (according to DIN EN 60751, test voltage 250V) more than 10MΩ at 300°C	Insulation resistance between terminals and probe sheath: more than 100MΩ at 25°C (according to DIN EN 60751, test voltage 250V) more than 10MΩ at 300°C
Protection	IP65-67 (dependent on housing)	IP65-67 (dependent on housing)
Mounting	Via compression fitting	Direct mounting

Electrical connection

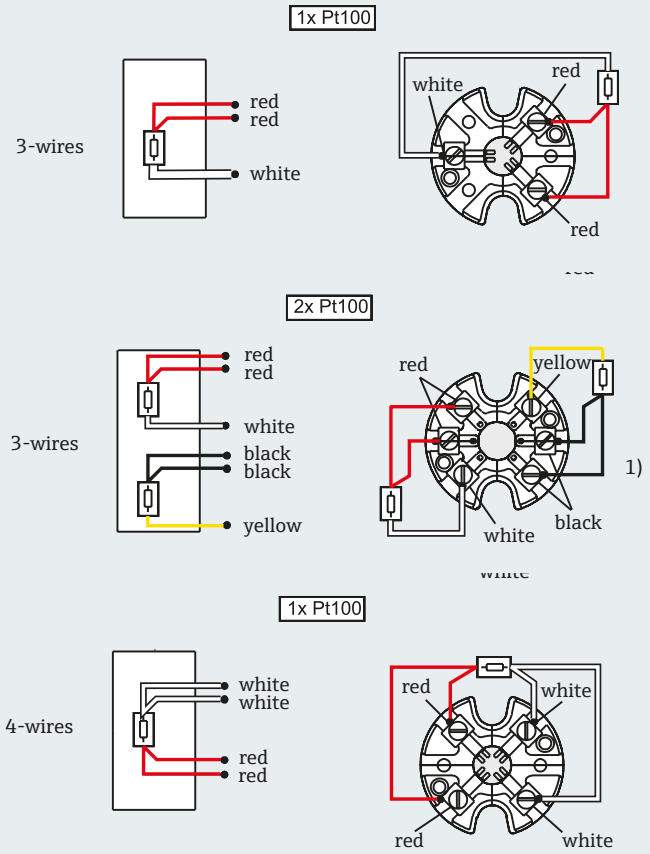

- For more information, specific application advice or to order, please contact us on **0161 286 5000** or email: **info@uk.endress.com**
- To download technical documentation, please visit our website: www.uk.endress.com
- For product selection help, try our online Application tool: www.uk.endress.com/applicator

iTHERM TM401/411

Modular resistance thermometers for hygienic applications.

TM401

TM411

WirelessHART

- iTHERM QuickSens: fast response time (T_{90}: 1.5s)
- iTHERM StrongSens: unrivalled vibration resistance (>60g)
- iTHERM QuickNeck: fast recalibration
- Wide range of hygienic process connections
- IP69K protection

The innovative iTHERM hygienic range of thermometers has been designed to meet the requirements of the food & beverage and life sciences industries and comply with highest quality standards and relevant international approvals such as 3-A, EHEDG, FDA, ASME BPE and TSE.

For standard temperature measurement applications, the TM401 devices offer an excellent price-performance ratio but for tougher tasks, the TM411 devices offer the best solution.

Furthermore, the TM411 device is available with our iTHERM QuickSens, StrongSens and Quickneck features.

- The iTHERM QuickSens offers our fastest response time of t90 in 1.5s to ensure optimum reponses times.
- The iTHERM StrongSens provides unsurpassed vibration resistance up to 60g, for ultimate plant safety
- The iTHERM Quickneck feature allows for removal of the measuring element in a quarter turn of the head without the need to unwire the instrument vastly reducing calibration downtime on plant.

Technical data

	TM401
Type	Metric/imperial: basic technology
Measurement accuracy	Class A
Response time	T_{90}: 7s
Protection	IP69K
Temperature	-50°C...+200°C
Pressure	Up to 40 bar
Replacable insert (thermowell)	No
Sensor	Standard thin film: 1 x Pt100
Sensor connection	3-wire or 4-wire
Extension neck	Yes
Display	No
Connection	Flying leads, cermic block or 1-channel iTEMP transmitter (4...20mA, HART)
Hygienic approvals	3-A, EHEDG, FDA, ASME BPE, TSE
Communication	4...20mA analogue, HART
Certification	Safe area only

Installation

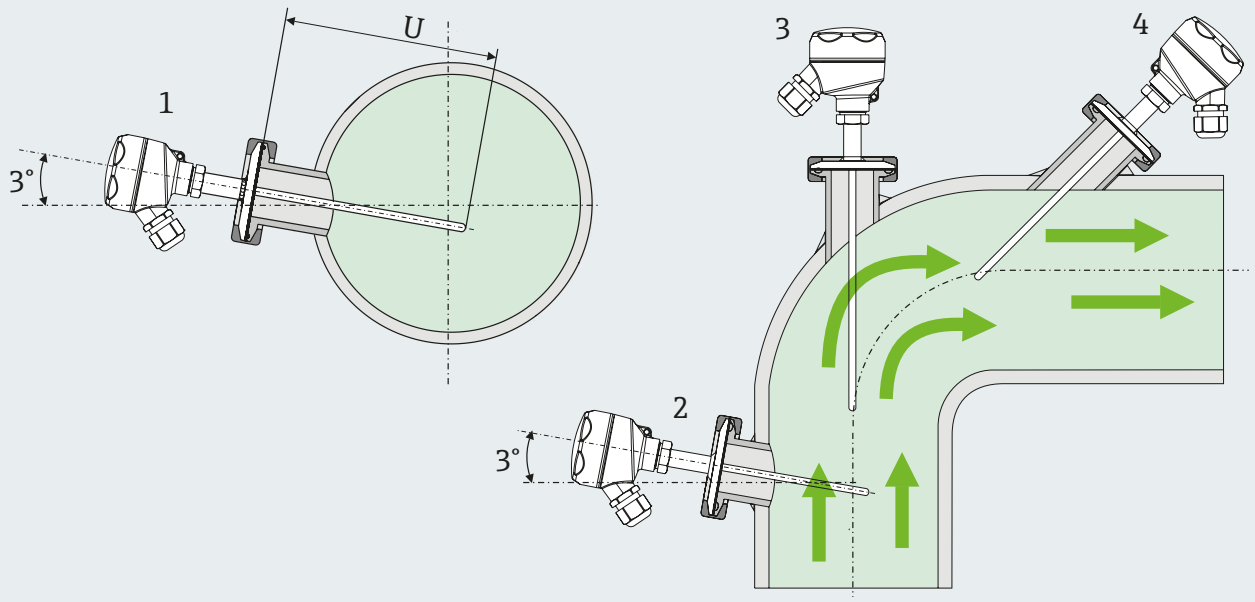

Technical data

	TM411
Type	Metric/imperial: advanced technology
Measurement accuracy	Class A or AA
Response time	T_{90}: 1.5s
Protection	IP69K
Temperature	-200°C...+600°C
Pressure	Up to 40 bar
Replacable insert (thermowell)	Yes
Sensor	Standard thin film: 1 x Pt100, wire wound: 1x/2x Pt100, iTHERM QuickSens: 1 x Pt100, iTHERM StrongSens: 1 x Pt100
Sensor connection	3-wire or 4-wire
Extension neck	Yes (iTHERM QuickNeck optional)
Display	Head transmitter with TID10 plug-on display
Connection	Flying leads, cermic block or 1-channel iTEMP transmitter (4...20mA, HART) or 2-channel iTEMP transmitter (HART, PROFIBUS, FOUNDATION Fieldbus)
Hygienic approvals	3-A, EHEDG, FDA, ASME BPE, TSE
Communication	4...20mA analogue, HART, PROFIBUS PA, FOUNDATIION Fieldbus
Certification	ATEX, FM, CSA, IEC Ex, NEPSI

- For more information, specific application advice or to order, please contact us on **0161 286 5000** or email: **info@uk.endress.com**
- To download technical documentation, please visit our website: www.uk.endress.com
- For product selection help, try our online Application tool: www.uk.endress.com/applicator

Omnigrad S TR61/62/63/65/66

Resistance temperature sensor. Suitable for hazardous area use.

WirelessHART

- Universal concept for all applications
- Measurement range -200°C...600°C
- EEx d or EEx ia certification

The Omnigrad S is an industrial RTD thermometer with a (Pt100) inset and thermowell. It complies with EN 50014/18/20 (ATEX certification) and is therefore suitable for use in hazardous areas. Omnigrad S RTDs are available with PCP, HART, PROFIBUS PA or FOUNDATION Fieldbus electronics and a variety of connections including threaded, flanged and compression fittings.

The thermometers can be used in process industries such as:
- Chemical industry
- Energy industry
- Gas processing industry
- Petrochemical industry
- General industrial services

Technical data

Version	TR61	TR62	TR63	TR65	TR66
Certification	: ATEX EEx ia ATEX EEx d	ATEX EEx ia ATEX EEx d	ATEX EEx ia ATEX EEx d	ATEX EEx ia ATEX EEx d	ATEX EEx ia ATEX EEx d
Process connections	: Compression fitting, thread (NPT/G) or flange (ANSI/DIN)	Thermowell thread: ½"NPT	Compression fitting, thread (NPT/G) or flange (ANSI/DIN)	Thread (NPT) flange (ANSI)	Thread (NPT) flange (ANSI)
Sensor element diameter	: 3mm, 6mm	6mm	3mm, 6mm	3mm, 4.5mm, 6mm, 8mm	3mm, 6mm
Response times (straight tip)	: 6mm t_{50} = 18s t_{90} = 55s	6mm t_{50} = 3.5s t_{90} = 8s	6mm t_{50} = 3.5s t_{90} = 8s	6mm t_{50} = 3.5s t_{90} = 8s	6mm t_{50} = 3.5s t_{90} = 8s
Maximum process pressure at 400°C	: 100 bar	dependent on thermowell	100 bar	80 bar	480 bar

Dimensions (mm)

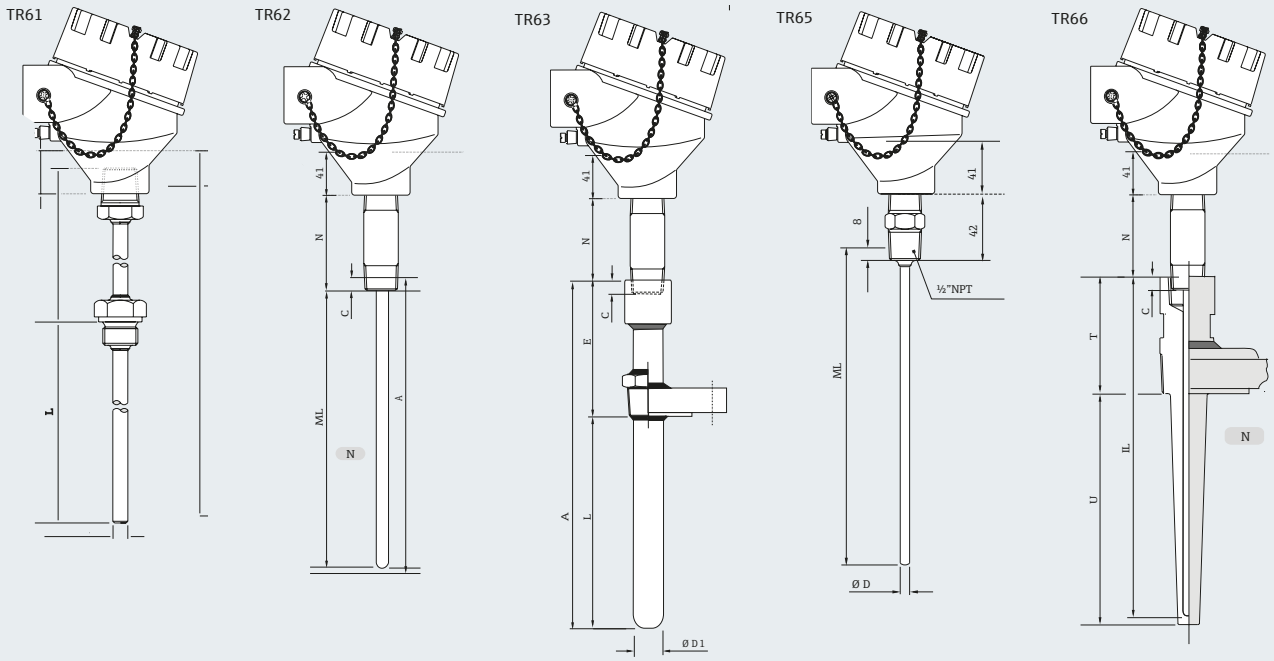

Electrical connection

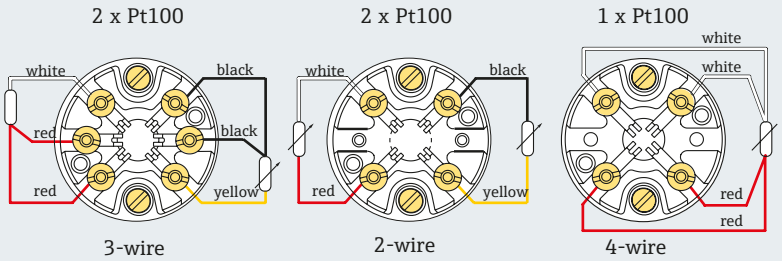

- For more information, specific application advice or to order, please contact us on **0161 286 5000** or email: **info@uk.endress.com**
- To download technical documentation, please visit our website: www.uk.endress.com
- For product selection help, try our online Application tool: www.uk.endress.com/applicator

Omnigrad M TC10/12/13 and Omnigrad S TC15

Thermocouple sensors for general industrial applications.

WirelessHART

- Customised immersion length
- Replaceable mineral insulated insert

The Omnigrad TC10...15 range of temperature sensors are thermocouples designed for use in the fine chemicals industry, but are also suitable for general applications and are ATEX certified for hazardous area use. They are made up of a measurement probe with a protection well and a housing, which may contain the transmitter for conversion of the variable measured. Due to its modular configuration and the structure defined by the DIN 43772 standard (form 2G/3G), the Omnigrad range is suitable for most industrial processes.

Applications

- Fine chemicals industry
- Light energy industry
- General industrial services

Technical data

	TC10	TC12	TC13	TC15
Neck length	80, 145mm	-	80, 145mm	155, 165mm
Thermowell diameter	9, 11, 12mm	9, 11, 12mm	9, 11, 12mm	18, 24mm
Wetted parts	316Ti, 316L, Hastelloy C276, Inconel 600	316Ti, 316L, Hastelloy C276, Inconel 600	316Ti, 316L, Hastelloy C276, Inconel 600	316Ti, 13 CrMo 4-5
Tip	Straight, reduced/tapered	Straight, reduced/ tapered	Straight, reduced/ tapered	Tapered
Max pressure	100 bar	40/100 bar	100 bar	800 bar
Process connection	Threaded	Compression fitting	Flanged	Weld-in, flanged

Installation

A and B: In small nominal bore pipes, the tip should reach or extend slightly past the centre line of the pipe (= L).
C and D: Angled installation.

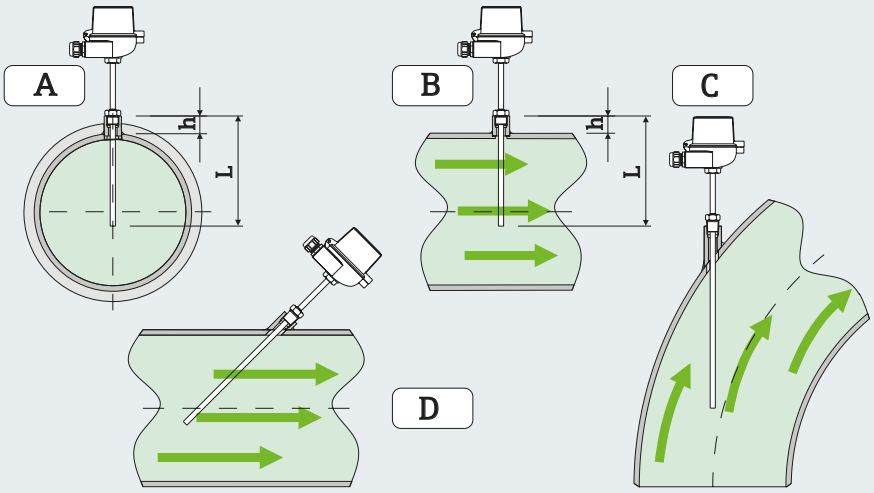

Response times

Response times for TC10-13

Test in water at 0.4m/s according to IEC 60751; temperature variation from 23 to 33°C.

Diameter	Type of TC	Response time	Grounded			Ungrounded		
			Reduced tip	Tapered tip	Straight tip	Reduced tip	Tapered tip	Straight tip
9mm	J, K	t_{50} t_{90}	5.5s 13s	9s 31s	15s 46s	6s 14s	9.5s 33s	16s 49s
11mm	J, K	t_{50} t_{90}	5.5s 13s	not available not available	15s 46s	6s 14s	not available not available	16s 49s
12mm	J, K	t_{50} t_{90}	not available not available	8.5s 20s	32s 106s	not available not available	9s 22s	34s 110s

Response times for TC15

Test in water at 0.4m/s according to IEC 60751; temperature variation from 23 to 33°C.

Diameter	Type of TC	Response time	Grounded			Ungrounded		
			Tapering on 65/73mm (U)	Tapering on 125/133mm (U)	Tapering on 275mm (U)	Tapering on 65/73mm (U)	Tapering on 125/133mm (U)	Tapering on 275mm (U)
18mm	J, K	t_{50} t_{90}	7s 18s	7s 18s	not available not available	7.5s 19s	7.5s 19s	not available not available
24mm	J, K	t_{50} t_{90}	17s 47s	15s 43s	15s 43s	18s 50s	16s 46s	16s 46s

- For more information, specific application advice or to order, please contact us on **0161 286 5000** or email: **info@uk.endress.com**
- To download technical documentation, please visit our website: www.uk.endress.com
- For product selection help, try our online Application tool: www.uk.endress.com/applicator

Omnigrad S TC61/62/63/65/66

Thermocouple temperature sensor. Suitable for hazardous area use.

WirelessHART

- Measuring range: type J -40... 750°C, type K -200...1100°C
- Universal concept for all applications
- Customised immersion length

What about harsh environments, corrosive substances and safety requirements? Our response is Omnigrad S temperature sensors which are specifically designed for these challenging applications. If bar stock thermowells, special materials and self-diagnosis field transmitters are considered the norm and you require a customised design or thermowell strength verification, then there is much to choose from within the Omnigrad S range.

The thermometers can be used in process industries such as:
- Chemical industry
- Energy industry
- Gas processing industry
- Petrochemical industry
- General industrial services

Technical data

	TC61	TC62	TC63	TC65	TC66
Certification :	ATEX EEx ia ATEX EEx d	ATEX EEx ia ATEX EEx d	ATEX EEx ia ATEX EEx d	ATEX EEx ia ATEX EEx d	ATEX EEx ia ATEX EEx d
Process connections :	Compression fitting, thread (NPT/G) or flange (ANSI/DIN)	Thermowell thread: ½" NPT	Compression fitting, thread (NPT/G) or flange (ANSI/DIN)	Thread (NPT) flange (ANSI)	Thread (NPT) flange (ANSI)
Sensor element diameter :	3mm, 6mm	3mm, 6mm	3mm, 6mm	3mm, 6mm	3mm, 6mm
Response time :	t_{50} = 2.5s t_{90} = 7s	t_{50} = 2.5s t_{90} = 7s	t_{50} = 2.5s t_{90} = 7s	t_{50} = 2.5s t_{90} = 7s	t_{50} = 2.5s t_{90} = 7s
Maximum process pressure at 400°C :	100 bar	Dependent on thermowell	100 bar	80 bar	480 bar

Dimensions (mm)

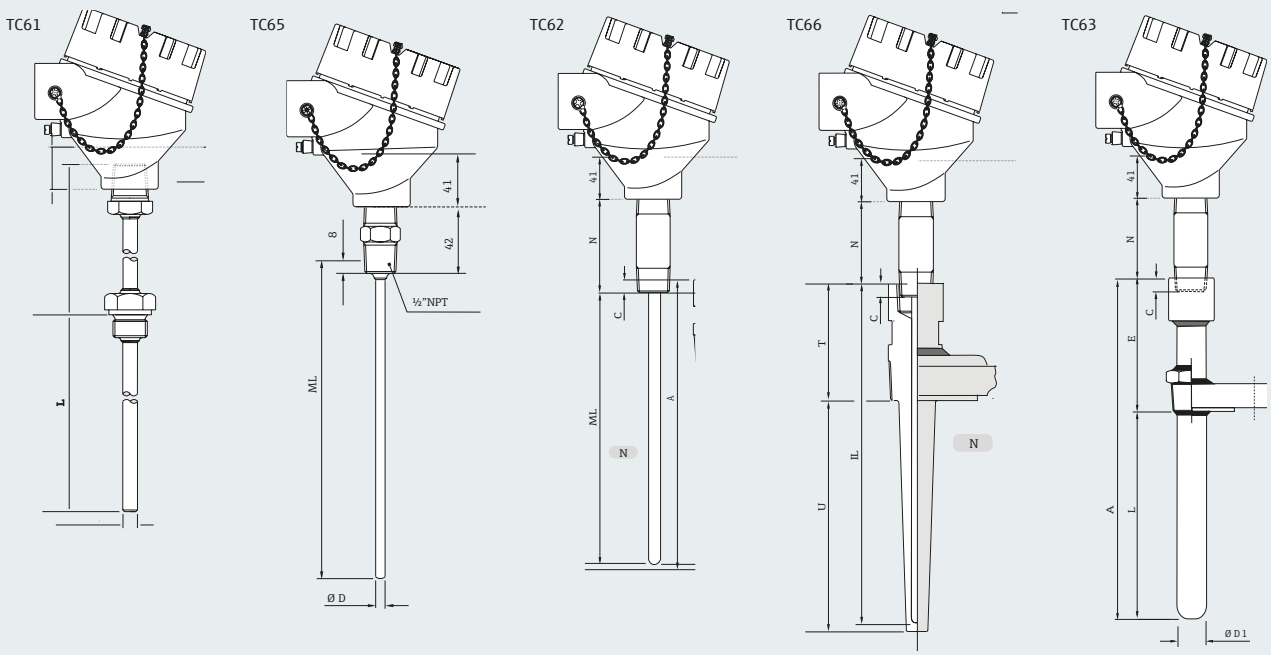

Electrical connections

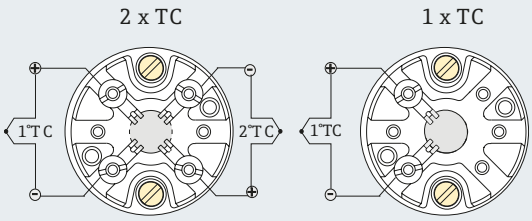

- For more information, specific application advice or to order, please contact us on **0161 286 5000** or email: **info@uk.endress.com**
- To download technical documentation, please visit our website: www.uk.endress.com
- For product selection help, try our online Application tool: www.uk.endress.com/applicator

Omnigrad S TAF11/12x/16

High temperature thermocouples.


TAF11


TAF12D

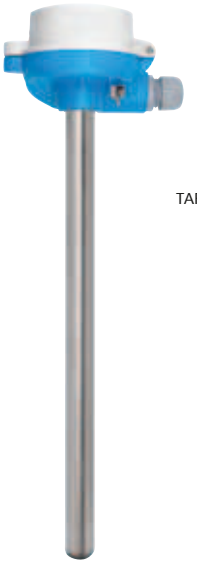
TAF16

- Adjustable process connections
- Replaceable spare parts
- Long-term stability due to sensor protection with non-porous materials
- Metallic or ceramic thermowells

The Omnigrad S TAF series high temperature assemblies are manufactured according to international DIN EN 50446 standards and consist of a measuring insert, a thermowell, a metal sleeve (TAF11/12x only) and a terminal head containing a transmitter or terminal block as electrical connection. They offer excellent performance in the field in terms of reliable measurement and device longevity as they have easily replaceable parts and are suitable for use in applications where temperatures may reach up to 1700°C such as furnaces, glass smelters and flue gas applications.

TAF11: For steel treatment (annealing), concrete furnaces and primaries. It contains a single or double TC insert and a ceramic thermowell.
TAF12x: Versions S/D/T include single/double/triple ceramic thermowells and are designed for applications such as ceramic baking ovens, brickworks, porcelain production and glass industries. They contain a single or double TC insert in ceramic insulators.
TAF16: For cement production, steel treatment, incinerators and fluidised bed furnaces. It contains a single or double TC insert and a metallic or ceramic thermowell.

Technical data

	TAF11	TAF12x	TAF16
Process temperature :	Up to +1600°C	Up to +1700°C	Up to +1700°C
Process connections :	Stop flange according to DIN EN 50446, adjustable flange or gas-tight compression fitting	Stop flange according to DIN EN 50446, adjustable flange or gas-tight compression fitting	Stop flange according to DIN EN 50446, adjustable flange or gas-tight compression fitting
Thermowell :	Ceramic	Ceramic	Ceramic or metallic

Equipment architecture

1. Terminal head DIN A (left) or DIN B (right) available with following available electrical connections:
- Terminal block DIN B with head transmitter (only in high cover terminal head)
- Terminal block (DIN B) or flying leads (only with MgO insulated insert)
2. Available process connections: stop flange according to DIN EN 50446, adjustable flange or gas-tight compression fitting.
3. Ceramic thermowell (external sheath for TAF11)

S: Single ceramic thermowell external sheath for TAF12

D: Double ceramic thermowell external and middle sheath for TAF12

T: Triple ceramic thermowell external, middle and internal sheath for TAF12

4. Measuring insert TPC200 with ceramic isolation
5. Measuring insert TPC100 with MgO insulation and metallic sheath, selectable for TAF11 and TAF16
6. Metallic or ceramic thermowell for TAF16

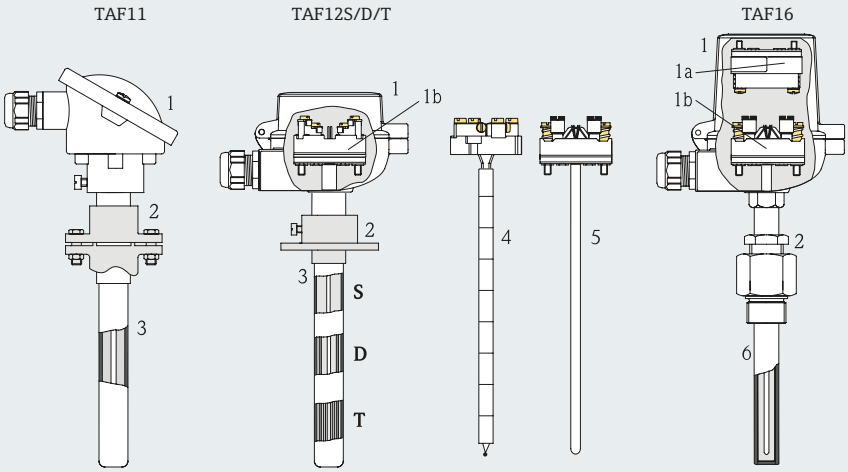

- For more information, specific application advice or to order, please contact us on **0161 286 5000** or email: **info@uk.endress.com**
- To download technical documentation, please visit our website: www.uk.endress.com
- For product selection help, try our online Application tool: www.uk.endress.com/applicator

iTEMP TMT121/181

PC-programmable temperature transmitter for head and DIN rail mounting.

TMT121

TMT181

- Universally adjustable with PC
- Galvanic isolation as standard
- ATEX certification

Description

The iTEMP TMT181 and TMT121 are programmable 2-wire temperature transmitters suitable for resistance elements (RTDs) in 2, 3 or 4-wire technology and for 12 different thermocouples. The configuration can be carried out quickly and simply online with the aid of a PC using the ReadWin 2000 operating software that includes a signal interface. This interface (TMT181A) can be connected to head transmitter TMT181 or to the front of the TMT121.

The TMT181 is a compact and completely enclosed head transmitter, suitable for installation in all common types of connection heads. Suitable for DIN rail mounting, the TMT121 is equipped with large connection terminals (up to 2.5mm^2) and requires no auxiliary voltage during configuration.

Both are galvanically isolated as standard, have sensor monitoring in accordance with NAMUR NE43, EMC in accordance with NAMUR NE21, output simulation and the possibility of sensor-specific linearisation. Intrinsically-safe and 3G (for zone 2) versions are available with ATEX certificate as an Ex version.

Technical data

	TMT181	TMT121
Input	: RTD Pt/Ni100, 500, 1000, 2, 3, 4-wire	
Thermocouple types	: B, C, D, E, F, G, J, K, L, N, R, S, T and U 10...400Ω, 10...2000Ω, 10...100mV	
Measuring range and zero point	: Freely adjustable	
Output	: 4...20mA or 20...4mA	
Inaccuracy*	: RTDs typically approx. 0.2 K. TCs typically 0.5 K	
Power supply (protected against pole reversal)	: 8...36 V DC	12...35 V DC
Galvanic isolation	: 3.75kV AC	2.0kV AC
Ambient temperature	: 40...85°C	-40...85°C
Protection	: Terminals IP00	IP20
Certification	: ATEX II 1G EEx ia IIC T4/5/6 or ATEX II 3G EEx nL IIC T4/5/6/ (zone 2)	ATEX II 2(1) G EEx ia IIC T4/5/6

Connections

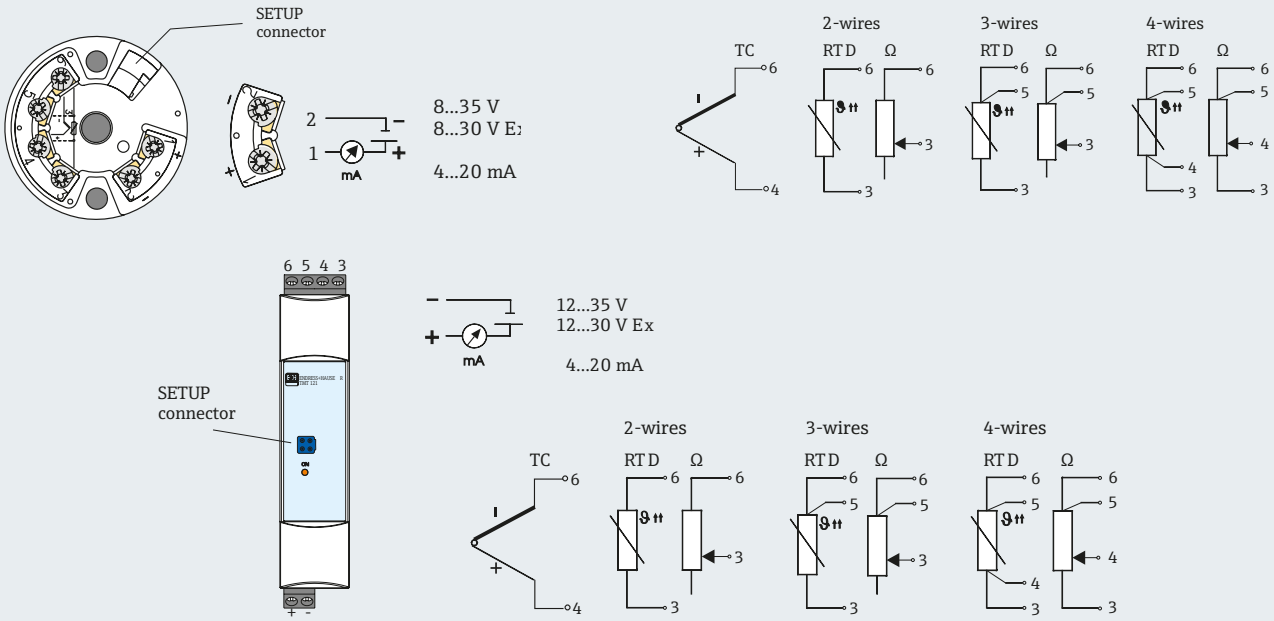

Dimensions (mm)

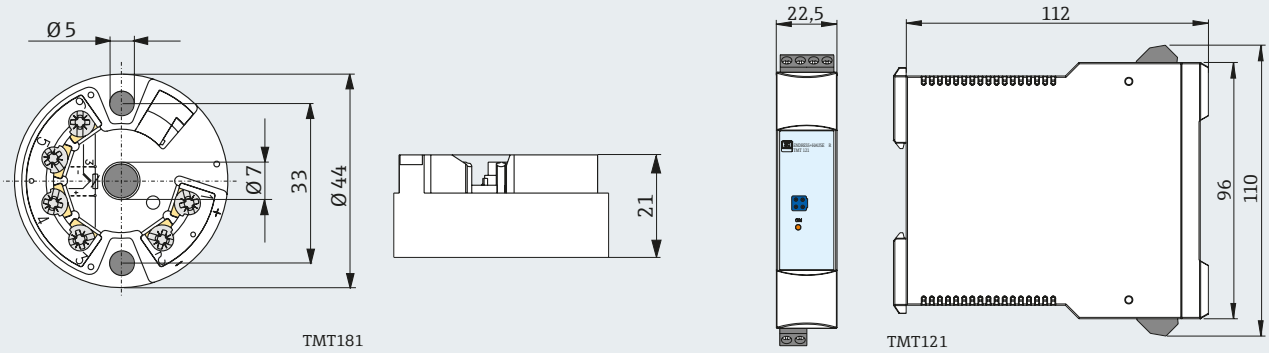

- For more information, specific application advice or to order, please contact us on **0161 286 5000** or email: **info@uk.endress.com**
- To download technical documentation, please visit our website: www.uk.endress.com
- For product selection help, try our online Application tool: www.uk.endress.com/applicator

iTEMP TMT122/182

Temperature transmitters for head and DIN rail mounting with HART protocol.

TMT122

TMT182

- For head and DIN rail mounting
- With HART protocol for configuration and maintenance
- Galvanic isolation as standard

Description

iTEMP TMT182 and the TMT122 are universal 2-wire temperature transmitters suitable for resistance elements (RTDs) in 2, 3 or 4-wire technology and for 12 different thermocouples. The HART is used to configure these transmitters, and for diagnosis for maintenance or fault detection. The configuration and diagnosis takes place via a PC using the Endress+Hauser Commuwin software package, for example, or using a suitable handheld HART configurator.

The TMT182 is a compact, completely enclosed head transmitter, suitable for mounting in all standard connection heads. The TMT122 is a 22.5mm wide temperature transmitter suitable for DIN rail mounting.
The TMT122 is equipped with large connection clamps (up to 2.5mm^2).

Both are galvanically isolated as standard, have sensor monitoring in accordance with NAMUR NE43, EMC in accordance with NAMUR NE21, output simulation and the possibility of sensor-specific linearisation. Intrinsically-safe and 3G (for zone 2) versions are available with ATEX certificate as an Ex version. This provides flexibility and an additional guarantee of good reliability in practice.

- Optional ATEX intrinsic safety
- Optional ATEX 3G (zone 2)

Technical data

	TMT182	TMT122
Input	: RTD Pt/Ni100, 500, 1000, 2, 3, 4-wire thermocouple types B, C, D, E, F, G, J, K,, L, N, R, S, T and U 10...400Ω, 10...2000Ω, 10...100mV	
Measuring range and zero point	: Freely adjustable	
Output	: 4...20mA or 20...4mA	4...20mA or 20...4mA
Accuracy	: RTDs typically approximately 0.2K TCs typically 0.5K	
Power supply (protected against pole reversal)	: 10...35V DC	12...35V DC
Galvanic isolation	: 2kV AC	
Ambient temperature	: 40...85°C	-40...85°C
Protection	: Terminals IP00	IP20
Certification	: ATEX II 1G EEx ia IIC T4/5/6 or ATEX II 3G EEx nL IIC T4/5/6/ (Zone 2)	ATEX II 2(1) G EEx ia IIC T4/5/6

Dimensions (mm)

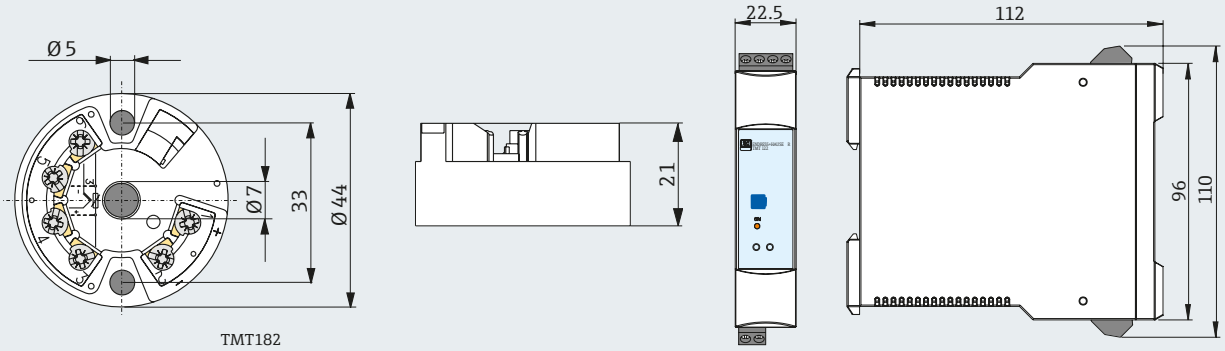

TMT182

Connections

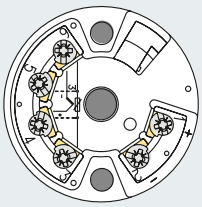

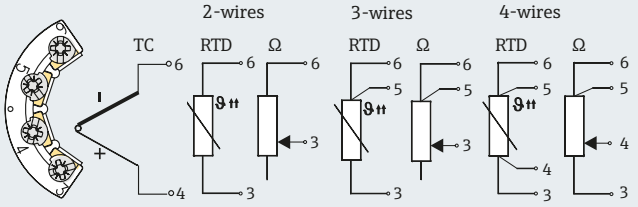

TMT182

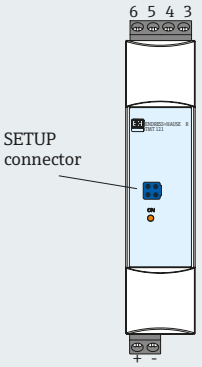

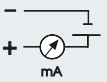

12...35 V
12...30 V Ex

4...20 mA

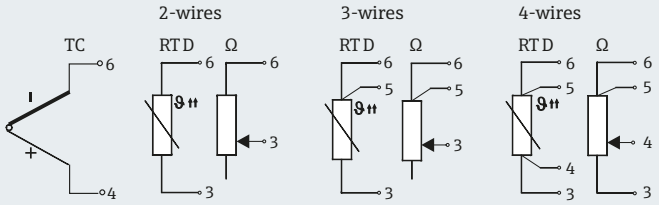

TMT122

- For more information, specific application advice or to order, please contact us on **0161 286 5000** or email: **info@uk.endress.com**
- To download technical documentation, please visit our website: www.uk.endress.com
- For product selection help, try our online Application tool: www.uk.endress.com/applicator

iTEMP TMT127/187

Temperature transmitters for resistance thermometers.

TMT127

TMT187

- **Fixed measuring range for Pt100**
- **Two-wire technology, 4...20mA analogue output**
- **Galvanic isolation**

Features and benefits

- High accuracy in complete ambient range
- Failure information when sensor breaks or short-circuits as per NAMUR NE 43
- EMC as per NAMUR NE 21, CE
- ATEX, CSA or FM certification

Application

Fixed range temperature head transmitter for converting Pt100 input signals into a scalable 4...20mA analogue output signal.

Technical data

	TMT127	TMT187
Input	: 2, 3 or 4-wire connection	2, 3 or 4-wire connection
Output signal	: 4...20mA analogue	4...20mA
Ex-certification	: ATEX, CSA, FM.	ATEX II 2 (1) G, ATEX II 1 G
Ambient temperature limits	: -40...+85°C	-40...+85°C
Storage temperature	: -40...+100°C	-40...+100°C
Climate class	: As per EN 60 654-1, class C	As per EN 60 654-1, class C
Ingress protection	: IP20	IP20
Shock resistance	: 4g/2 to 150 Hz as per IEC 60 068 2-6	4g/2 to 150Hz as per IEC 60 068 2-6
Weight	: Approx. 90g	Approx. 40g
Materials	: Housing: PC/ABS, UL 94V0	Housing: PC
Terminals	: Pluggable screw terminal, max. 2.5mm^2, solid or strand with wire end sleeve.	Cable up to max. 1.75mm2 (secure screws)

Dimensions (mm) for TMT127

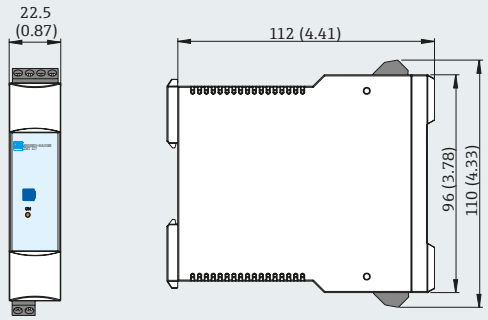

Connections for TMT127

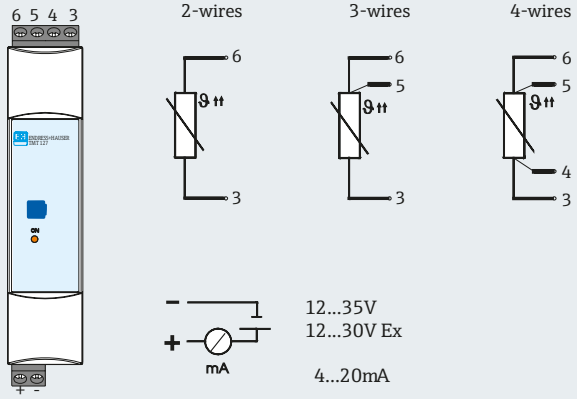

Dimensions (mm) for TMT187

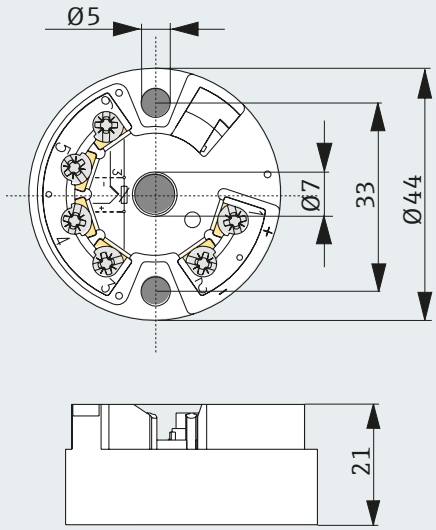

Connections for TMT187

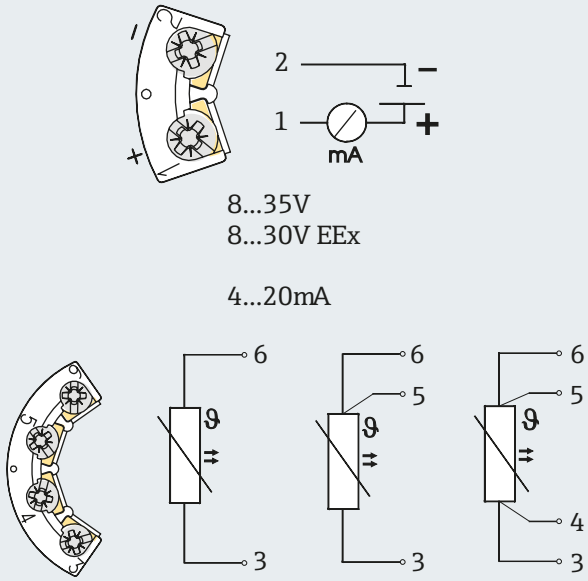

- For more information, specific application advice or to order, please contact us on **0161 286 5000** or email: **info@uk.endress.com**
- To download technical documentation, please visit our website: www.uk.endress.com
- For product selection help, try our online Application tool: www.uk.endress.com/applicator

iTEMP TMT128/188

Temperature transmitters for thermocouples.

TMT128

TMT188

- **Fixed measuring range for thermocouples**
- **Two-wire technology, 4...20mA analogue output**
- **Galvanic isolation**

Features and benefits

- High accuracy in complete ambient range
- Failure information when sensor breaks or short-circuits as per NAMUR NE 43
- EMC as per NAMUR NE 21, CE
- ATEX, CSA or FM certification

Application

Fixed range temperature head transmitter for converting thermocouple input signals into a scalable 4...20mA analogue output signal.

Technical data

	TMT128	TMT188
Output signal	: 4...20mA analogue	4...20mA
Ex certification	: ATEX, CSA, FM.	ATEX II 2 (1) G ATEX II 1 G
Ambient temperature limits	: -40...+85°C	-40...+85°C
Storage temperature	: -40...+100°C	-40...+100°C
Climate class	: As per EN 60 654-1, class C	As per EN 60 654-1, class C
Ingress protection	: IP20	IP20
Shock resistance	: 4g/2 to 150Hz as per IEC 60 068 2-6	4g/2 to 150Hz as per IEC 60 068 2-6
Weight	: Approx. 90g	Approx. 40g
Materials	: Housing: PC/ABS, UL 94V0	Housing: PC potting: PUR
Terminals	: Pluggable screw terminal, max. 2.5mm2, solid or strand with wire end sleeve.	Cable up to max. 1.75mm2 (secure screws)

Dimensions (mm) for TMT128

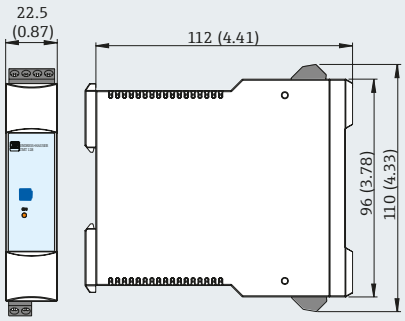

Connections for TMT128

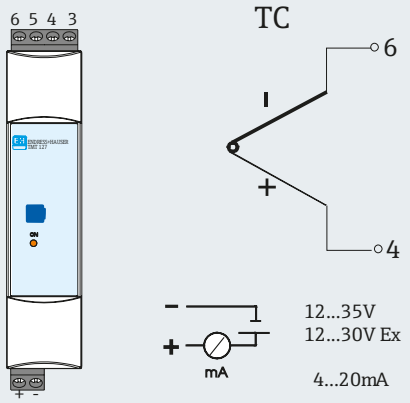

Dimensions (mm) for TMT188

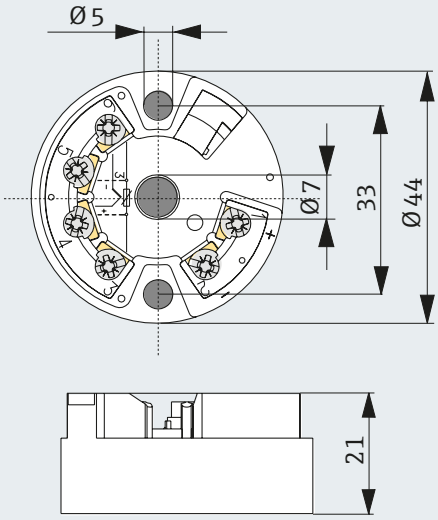

Connections for TMT188

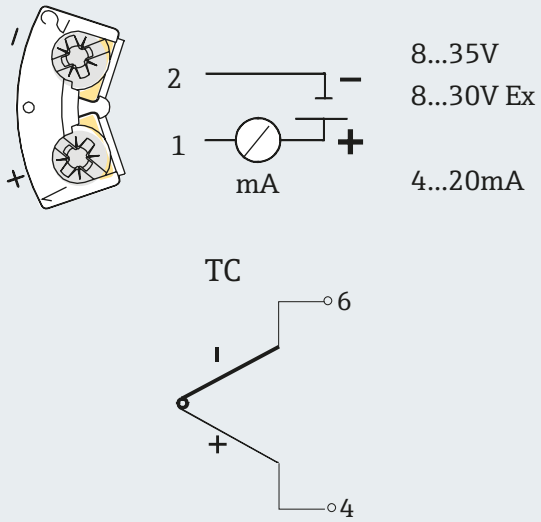

- For more information, specific application advice or to order, please contact us on **0161 286 5000** or email: **info@uk.endress.com**
- To download technical documentation, please visit our website: www.uk.endress.com
- For product selection help, try our online Application tool: www.uk.endress.com/applicator

iTEMP TMT82/84/85

Temperature transmitters for head mounting.

TMT82 with TID10 display

TMT84

TMT85

- Dual sensor input
- Advanced diagnostics
- Screw or spring terminals
- High accuracy ±0.1K
- Optional TID10 display

The iTEMP range of temperature head transmitters feature two input channels and a choice of HART (TMT82), PROFIBUS (TMT84) or FOUNDATION Fieldbus (TMT85) protocols for the conversion of different input signals into digital output signals. Resistance thermometers, thermocouples, resistance transmitters and voltage transmitters can all be fed through these compact devices and, for maximum versatility, they are suitable for use with 2-, 3- and 4-wire technology!

The iTEMP head transmitters also offer sensor diagnostics: sensor failure, cable corrosion, wiring error and device hardware error are all monitored for improved plant optimisation. Better still, with galvanic isolation between fieldbus and sensor inputs and ATEX, FM, CSA, IECEx and NEPSI certification for hazardous area use, you can be sure of accurate and reliable temperature data in all eventualities!

Technical data

	TMT82	TMT84	TMT85
Communication protocol :	HART	PROFIBUS	FOUNDATION Fieldbus
Measured variable :	Temperature, resistance and voltage	Temperature, resistance and voltage	Temperature, resistance and voltage
Input type :	Two independent sensors	Two independent sensors	Two independent sensors
Linearisation :	Temperature linear, resistance linear, voltage linear	Temperature linear, resistance linear, voltage linear	Temperature linear, resistance linear, voltage linear
Galvanic isolation :	U = 2kV AC (input/output)	U = 2kV AC (input/output)	U = 2kV AC (input/output)
Current consumption :	≤23mA	≤11mA	≤11mA
Switch-on delay :	10s	8s	8s
Ambient temperature :	−40°C...+85°C (safe areas)	−40°C...+85°C (safe areas)	−40°C...+85°C (safe areas)
Certification :	ATEX, FM, CSA, IEC Ex, NEPSI	ATEX, FM, CSA, IEC Ex, NEPSI	ATEX, FM, CSA, IEC Ex, NEPSI

Dimensions (mm)

TID10 pluggable display

Whilst there are no display or operating elements present on the head transmitters, the TID10 plug-on display can be used as an option. It will display information regarding the actual measured value and the measurement point identification. In the event of a fault in the measurement chain, this will be displayed in inverse colour showing the channel ident and diagnostics code. DIP switches can be found on the rear of the display, enabling the hardware set-up such as the device address.

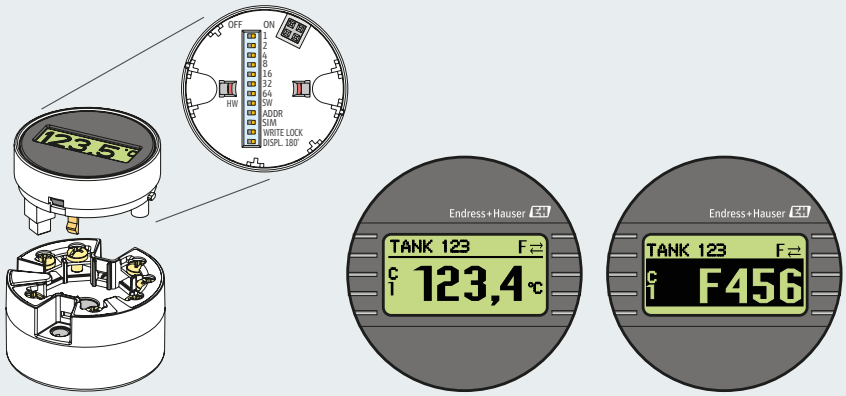

Installation

A. terminal head, flat face as per DIN EN 50446, direct installation onto insert with cable entry (middle hole 7mm)
B. Separated from process in field housing, wall or pipe mounting
C. With clip on DIN rail as per IEC 60715 (TH35)
D. DIN rail device for mounting on a TH35 mounting rail as per EN 60715

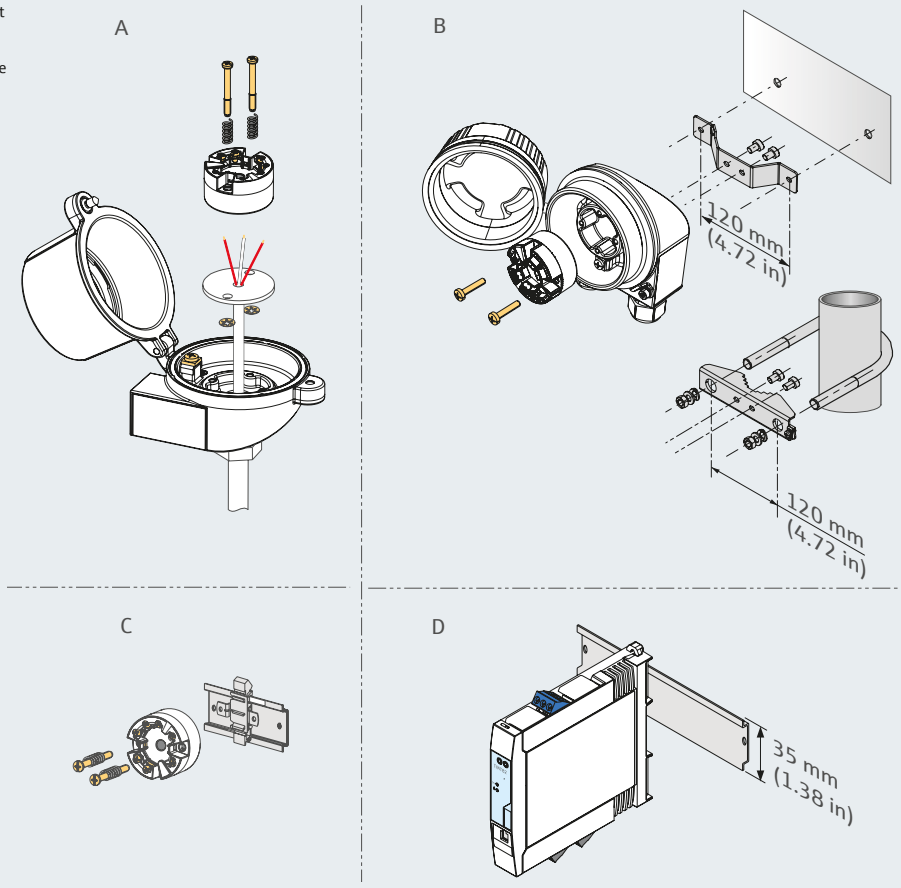

- For more information, specific application advice or to order, please contact us on **0161 286 5000** or email: **info@uk.endress.com**
- To download technical documentation, please visit our website: www.uk.endress.com
- For product selection help, try our online Application tool: www.uk.endress.com/applicator

iTEMP TMT142

Universal HART temperature transmitter for use in the field.

- ATEX EEx ia, EEx d, FM and CSA certification
- Rotatable rear-illuminated display
- Undervoltage detection
- 2-wire technology

Applications

Tough, inhospitable conditions? Endress+Hauser's iTEMP TMT142 HART temperature field transmitter has been purpose-designed to perform where the job demands. Industries such as chemical, petrochemical and mining pose their own set of challenges. That's why the TMT142 offers a robust housing with IP65 protection and full ATEX approval.

The TMT142 is also universally programmable with HART protocol for resistance thermometers, thermocouples and voltage transmitters. The large rotatable rear-illuminated display shows the actual measured value, not only as a digital indicator but also as a 10% step trend bar graph for maximum operability. What's more, the TMT142 fulfils NAMUR requirements: EMC to NE21, failure conditioning in the event of sensor breakdown to NE43 and corrosion detection to NE89. Operation, visualisation and maintenance are carried out via a PC, using FieldCare or ReadWin 2000 operating software.

Technical data

Input	: RTD, TC, Ω, mV
Output	: 4...20mA
Supply voltage	: 11...40VDC (standard) 11...30VDC (Ex-version)
Operation	: HART
Certificates	: ATEX, FM, CSA, CSA GP

Dimensions (mm)

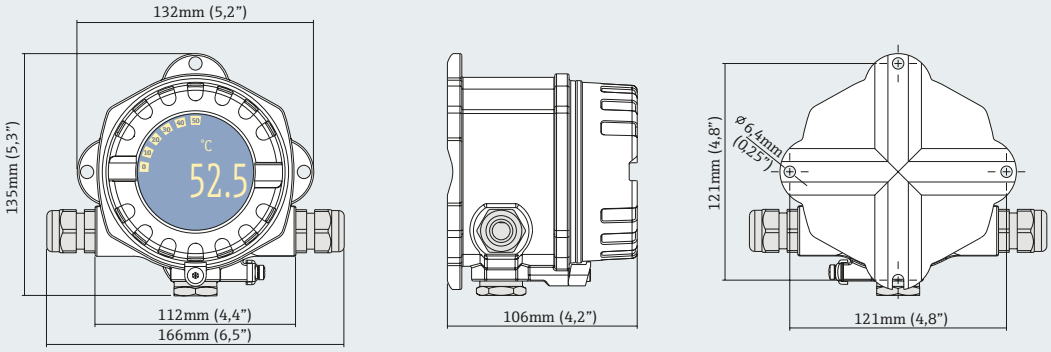

Electrical connection

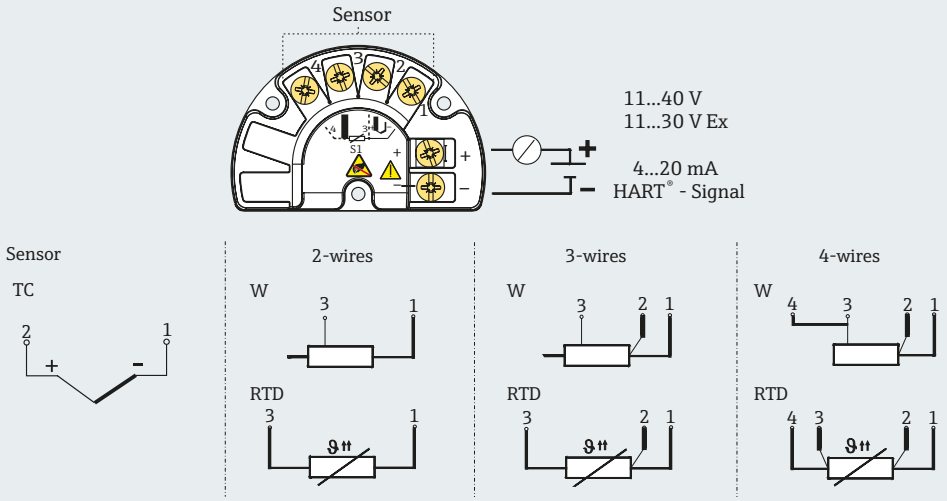

- For more information, specific application advice or to order, please contact us on **0161 286 5000** or email: **info@uk.endress.com**
- To download technical documentation, please visit our website: www.uk.endress.com
- For product selection help, try our online Application tool: www.uk.endress.com/applicator

iTEMP TMT162

Universal temperature transmitter with HART, PROFIBUS or FOUNDATION Fieldbus protocol.

- Universally programmable
- Two-wire technology, analogue output to 4...20mA output
- Sensor monitoring
- ATEX, FM or CSA certification
- Galvanic isolation

Features and benefits

- Illuminated rotatable display
- Operation, visualisation and maintenance with PC e.g. Fieldcare or ReadWin 2000 operating software
- Breakdown information in event of sensor break or sensor short-circuit, adjustable to NAMUR NE43
- EMC to NAMUR NE21, CE
- Output simulation
- Min/max. process value recorded
- Customised measuring range setup or expanded SETUP
- Optional two input channels, e.g. for 2 x Pt100, 3-wire connection.

Application

Temperature field transmitter for converting various input signals to an analogue, scalable 4...20mA output signal.
Input:

- Resistance thermometer (RTD)
- Thermocouples (TC)
- Resistance transmitter (W)
- Voltage transmitter (mV)
- HART, PROFIBUS or FOUNDATION Fieldbus protocol.

The TMT162 is a two-wire transmitter with analogue output, two (optional) measuring inputs for resistance thermometers and resistance transmitters in 2-wire, 3-wire or 4-wire connection, thermocouples and voltage transmitters. The LCD display shows the current measured value digitally and as a bar graph with an indicator for limit value violation, The TMT162 (HART) can be operated using a handheld terminal (DXR375) or PC.

Technical data

Output signal	: 4...20mA analogue
Galvanic isolation	: U = 2kV AC (input/output)
Ambient temperature	: Without display: -40...+ 85°C With display: -30...+70°C
Climate class	: As per EN 60 654-1, Class C
Degree of protection	: IP67
Shock and vibration	
Resistance	: 3g/2 to 150Hz as per IEC 60 068-2-6
Weight	: Approx. 1.4kg, (aluminium housing)
ITK	: Version 4.61

Dimensions (mm)

Stainless steel/aluminium housing

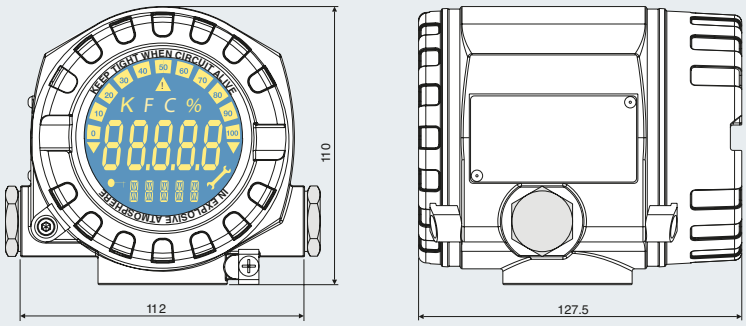

Optional T17 stainless steel housing

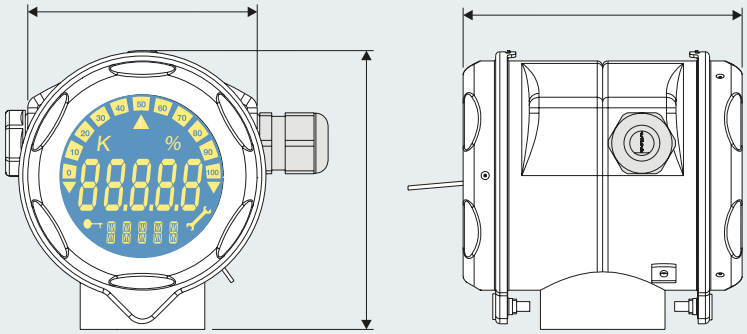

Display elements

Field transmitter display (illuminated, rotatable in 90° stages)

1. Bar graph display in 10% stages with indicators for over-ranging/under-ranging
2. Caution display
3. Unit display K, °F, °C or %
4. Measured value display
5. Status and information display
6. Communication display
7. Programming disabled display

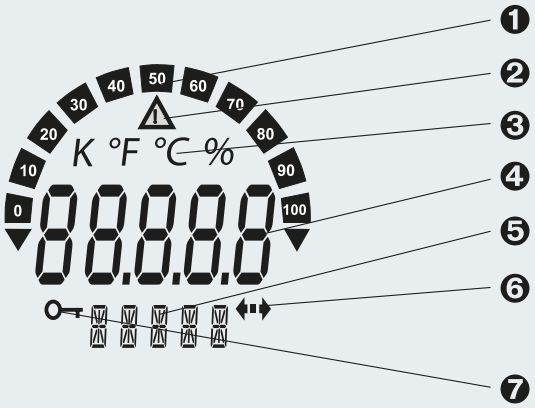

- For more information, specific application advice or to order, please contact us on **0161 286 5000** or email: **info@uk.endress.com**
- To download technical documentation, please visit our website: www.uk.endress.com
- For product selection help, try our online Application tool: www.uk.endress.com/applicator

Omniset TPR100

Mineral insulated insert.

- Mineral insulated cable sheathed in stainless steel
- 3 or 6mm diameter stem or tapered
- ATEX certification

The TPR100 is a thermoresistance RTD insert and is used as a replaceable measuring element in thermometers. Constructed in compliance with DIN EN 60751, it consists of a mineral insulated cable and a Pt100 sensing element. It can be connected to the conversion electronics by means of flying leads or alternatively with a ceramic terminal block. Options include various configurations of Pt100 sensors, stems and certification. Sensors are either wire wound or thin film for different operating ranges -50...400°C and -200...600°C.

Technical data

Material	: Stem: stainless steel 316L terminal block: ceramic
Measuring range	: Wire wound Pt100: -200...+600°C thin film Pt100: -50...+400°C
Maximum process pressure	: 2Mpa (20 bar) at 20°C
Shock & vibration resistance	: According to DIN EN 60751 2.8g peak / 10...500Hz
Insulation	: Insulation resistance between terminals and probe sheath: more than 100MΩ at 25°C (according to DIN EN 60751, test voltage 250V) more than 10MΩ at 300°C

Applications

- Fine chemicals
- Power industry
- Food industry
- Environmental industry
- General processes

Features and benefits

- Mineral insulated cable sheathed in stainless steel 316L
- 3 or 6mm diameter stem
- Customised immersion length
- Different kinds of Pt100 and classes of tolerance (DIN EN 60751): wire wound type, class A or class AA, single or double; thin film type, class A or class AA
- 4-wire connection for single Pt100, 3-wire connection for double Pt100
- Electronics included in the ordering structure: PCP (4...20mA also with enhanced accuracy), HART and PROFIBUS PA 2-wire transmitters
- Factory calibration certificate
- ATEX I GD EEx ia certification

Dimensions (mm)

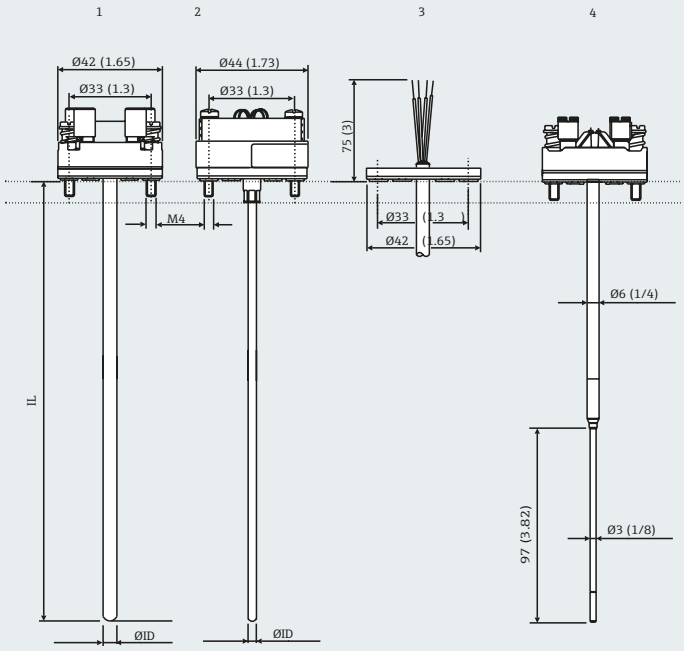

Electrical connection

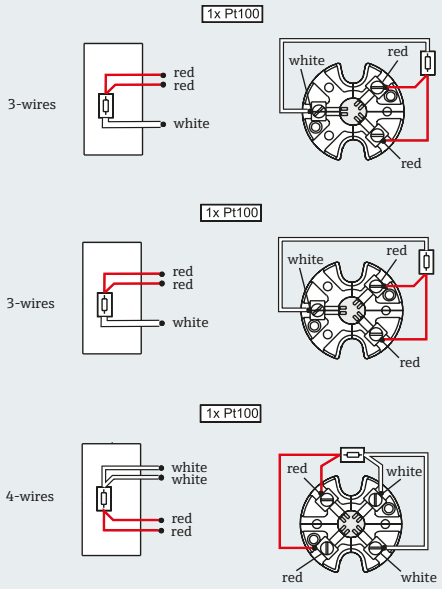

- For more information, specific application advice or to order, please contact us on **0161 286 5000** or email: **info@uk.endress.com**
- To download technical documentation, please visit our website: www.uk.endress.com
- For product selection help, try our online Application tool: www.uk.endress.com/applicator