Leuze electronic

Safety Relay selection table

Selection table

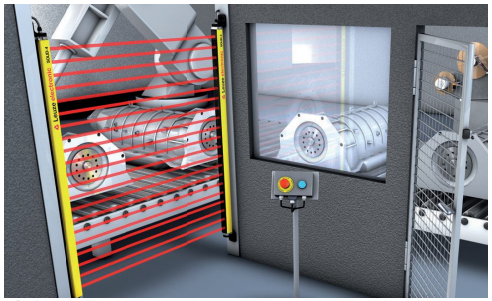

Safeguarding an assembly station and a service door with the MSI-SR5 *Safety Relay*

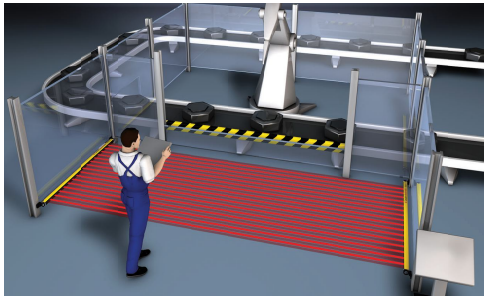

Safety Light Curtain with an MSI-SR4 *Safety Relay as danger zone guarding with start/restart interlock on a robot cell*

With Safety Relays of the MSI series, depending on the application, opto-electronic safety sensors or Safety Switches can be connected to the safety circuit of the machine control system. The interfaces must be right here. In addition to high reliability and service life, small construction dimensions are often also required. The MSI Safety Relays take these requirements into account with their mechanical and electrical design in an ideal way, and also enable an economical integration into many kinds of safety-related faulty connection situations.

Space-saving and reliable: the MSI *Safety Relay family:* MSI-SR5, MSI-2H, MSI-SR4, MSI-RM2

Safety type/category in accordance with EN ISO 13849		Performance Level (PL) in accordance with EN ISO 13849-1	Connectable safety components	Features							Series	Page
Depending on the safety type of the upstream AOPD		Depending on the safety type of the upstream AOPD	Type 4 or type 2 AOPD with 2 safety transistor outputs, RES and internal dynamic EDM			●		●		●	MSI-RM2	430
Safety type: Type III C in accordance with EN 574*		e	Two-hand switching device		●						MSI-2H	436
Up to category 4 in accordance with EN ISO 13849		e	Safety Light Curtains, Single and Multiple Light Beam Safety Devices, type 3 Safety Laser Scanners, Safety Switches, E-Stop command devices	●			●		●		MSI-SR4	442
Up to category 4 in accordance with EN ISO 13849		e	Safety Light Curtains, Single and Multiple Light Beam Safety Devices, type 3 Safety Laser Scanners, Safety Switches, E-Stop command devices			●	●		●		MSI-SR5	448
2		Up to d	AOPDs			●	●		●		MSI-T	454
Up to category 4 in accordance with EN ISO 13849		Up to e	Magnetically Coded Sensors		●		●		●		MSI-MC310	460

*) Depending on the category of the upstream protective device

MSI-RM2 p. 428 | MSI-2H p. 434 | MSI-SR4 p. 440 | MSI-SR5 p. 446 | MSI-T p. 452 | MSI-MC310 p. 458

www.leuze.com/msi-relays/

SAFETY RELAYS

MSI-RM2

Guarding a paternoster shelf with SOLID-2E *Safety Light Curtain and* MSI-RM2 *relay module*

Optoelectronic protective devices today frequently have electronic switching outputs and integrated additional functions such as contactor monitoring (EDM) and start/restart interlock. However the requirement for the protective device to transmit the switching signals, not electronically, but rather contact-based to the machine control system often exists. With the new MSI-RM2 relay module the user is provided with a compact and at the same time cost-effective solution for connecting safety sensors. The relay module, only 17.5 mm wide, has two potential-free make contact circuits with a response time of only 10 ms and LED displays for the switching status. As its switching behavior is monitored by the EDM function of the safety sensor, an additional electronic monitoring system in the relay module is not required. The MSI-RM2 conforms to standard EN IEC 60204-1.

Typical areas of application

- Connection of electro-sensitive protective equipment with electronic outputs, integrated contactor monitoring (EDM) and start/restart interlock (RES) on machine control systems.

MSI-RM2 p. 428 | MSI-2H p. 434 | MSI-SR4 p. 440 | MSI-SR5 p. 446 | MSI-T p. 452 | MSI-MC310 p. 458

Important technical data, overview

Category in accordance with EN ISO 13849	Up to 4 (depending on the category of the upstream protective device)
Supply voltage	24 V DC, ±20 % (via AOPD)
Safety-related switching outputs (OSSDs)	2 relay outputs (changeover)
Signal output	Relay output (NC)
Response time	10 ms
Ambient temperature, operation	0...+50°C
Ambient temperature, storage	-25...+70°C
Dimensions (W x H x D)	17.5 mm x 99 mm x 113.6 mm

Functions

Signal conversion of electronic outputs of electro-sensitive protective equipment on potential-free relay contacts

Monitoring external contactors in the signal circuit with the upstream protective device

Special features

- **Suitable up to category 4 (depending on the category of the upstream protective device)**
- **2 release circuits, 1 break contact as signal circuit for device monitoring (EDM)**
- **LED displays, K1 and K2**
- **Supply voltage through upstream protective device**
- **Housing width, 17.5 mm**

Features

Further information

www.leuze.com/relays/

SAFETY RELAYS

Ordering information

MSI-RM2
Included in delivery: 1 set of connecting and operating instructions (PDF file on CD-ROM)

Functions: Relay module for optoelectronic protective devices in accordance with EN IEC 60204-1, EN 50205 EN IEC 60255, IEC 60664-1

MSI-RM2
Safety Relay

Art. no.	Article	Description
549918	MSI-RM2	Relay module, two-channel, for AOPDs with 2 OSSDs and EDM

Electrical connection, MSI-RM2 connection example

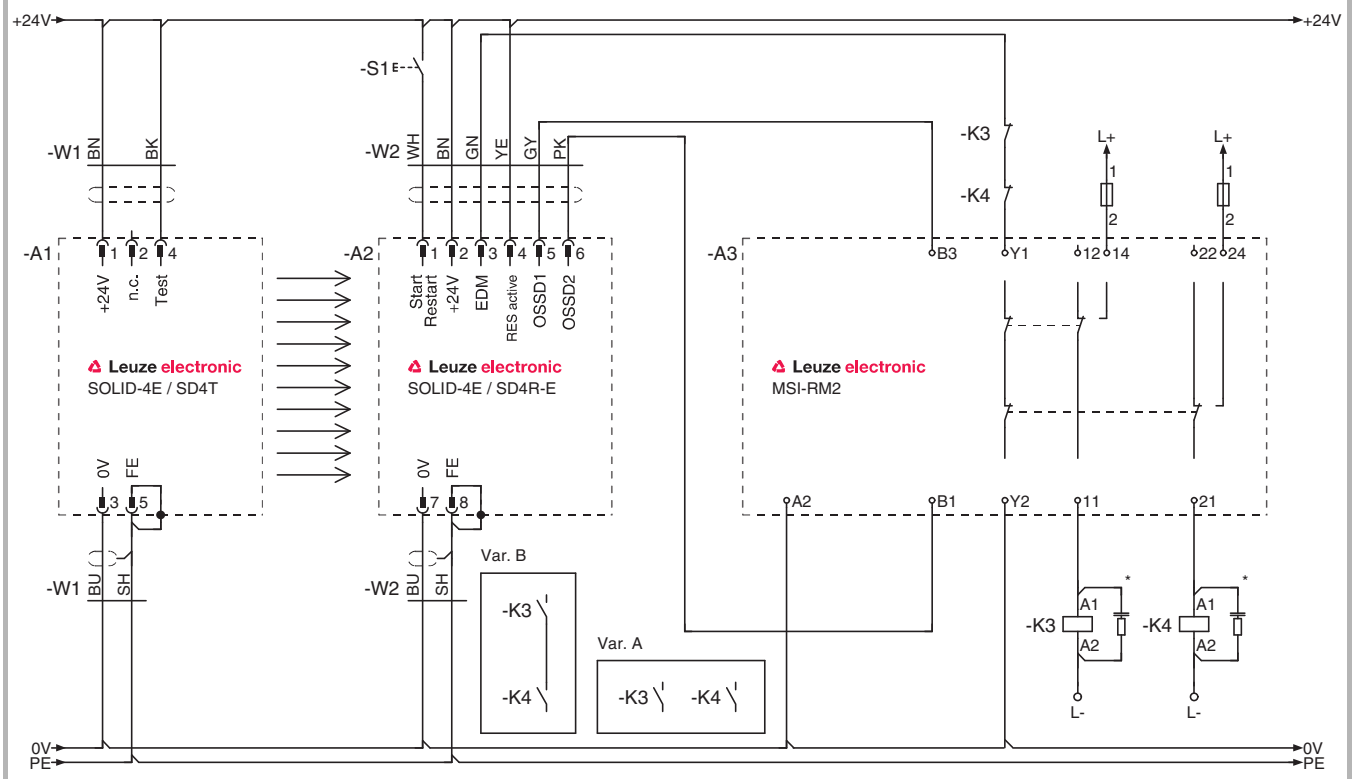

*) Spark extinction circuit, supply suitable spark extinction

MSI-RM2 *with* SOLID-4E *Safety Light Curtain*

⚠ Please observe the operating instructions of the components!

MSI-RM2 p. 428	MSI-2H p. 434	MSI-SR4 p. 440	MSI-SR5 p. 446	MSI-T p. 452	MSI-MC310 p. 458

Technical data

General system data		
Category in accordance with EN ISO 13849	Up to 4 (depending on the category of the upstream protective device)	
Service life (T_M) in accordance with EN ISO 13849-1	20 years	
Number of cycles until 10% of the components have a failure to danger (B_{10d})	With DC1 (ohmic load)	10,000,000 (2 A, 24 V)
	With AC1 (ohmic load)	100,000 (2 A, 230 V) 600,000 (1 A, 230 V) 1,300,000 (0.5 A, 230 V)
	With DC13 (inductive load)	10,000,000 (2 A, 24 V)
	With AC15 (inductive load)	100,000 (2 A, 230 V) 600,000 (1 A, 230 V) 1,300,000 (0.5 A, 230 V)
	Low load (20% nominal load)	1.860.000
Supply voltage	24 V DC ±20 % (via OSSDs of the connected AOPD)	
Power consumption	1.5 W (supply via AOPD)	
Safety-related switching outputs (OSSDs)	2 relay outputs (changeover)	
Signal output	Relay output (NC)	
Continuous current per current path	Max. 3 A	
Response time	10 ms	
Restart delay time	20 ms	
Current consumption (inputs B1 and B3)	32 mA each	
Admissible input line resistance	50 Ω	
Ambient temperature, operation	0...+50°C	
Ambient temperature, storage	-25...+70°C	
Safety class	II	
Protection rating	IP 20	
Connection system	Screw terminals	
Dimensions (W x H x D)	17.5 mm x 99 mm x 113.6 mm	
Mounting	On 35 mm DIN rail	

Please note the additional information in the connecting and operating instructions and at www.leuze.com/relays.

Dimensional drawings

MSI-RM2 Safety Relay

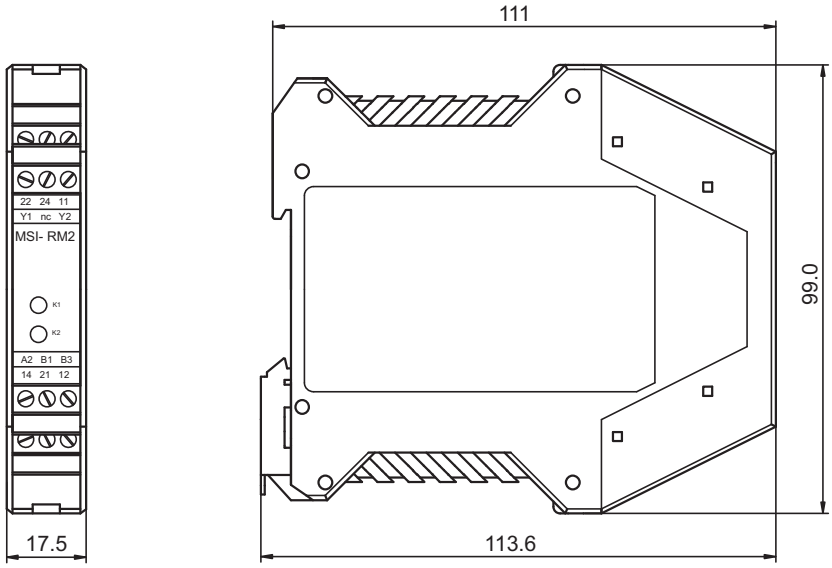

Dimensions in mm

Our 3D CAD models can be found at: www.leuze.com/3d-cad-models.

SAFETY RELAYS

MSI-2H

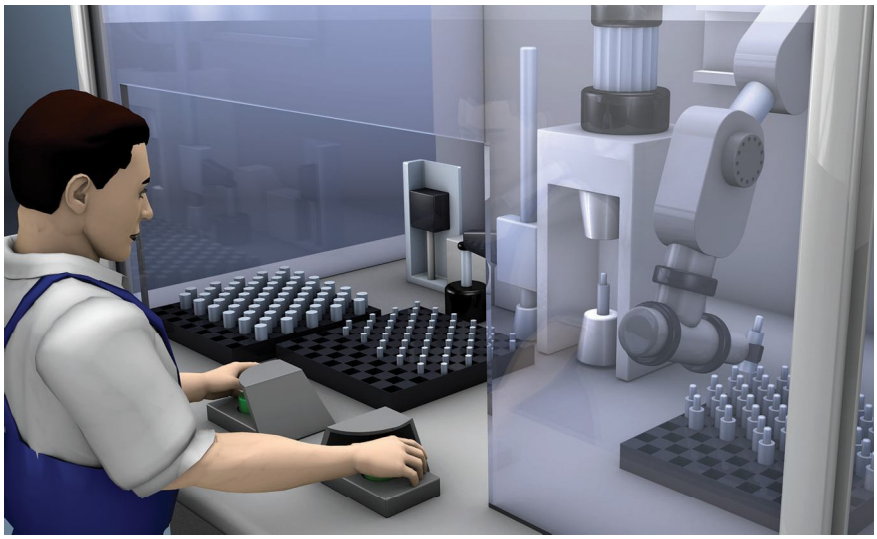

Guarding a feeding-in area with two-hand control station and two-hand control relay MSI-2H

With manually fed presses, after placing in the work piece the operator must press two hand-activated buttons outside the danger zone with both hands at almost the exact same time to start the next machine production step. This guarantees that both hands are outside the danger zone and the existing safety requirements are satisfied. The MSI-2H Safety Relay is the link between these activation elements and the machine control system; it acts as two-hand relay in accordance with EN 574 type III C. The device checks the simultaneous activation of the buttons and ensures a controlled process start. The module is used everywhere that feeding-in is not automatic, but rather has to be performed manually by people. These kinds of situations frequently arise in electronics production and in plate metal processing. The use of protective door monitors in accordance with EN IEC 60204-1 STOP 0 is also possible.

Typical areas of application

- Two-hand control units (e.g. on presses, pick-and-place machines) in accordance with EN 574, type III C
- Two-channel protective door monitoring

MSI-RM2 p. 428 | **MSI-2H p. 434** | MSI-SR4 p. 440 | MSI-SR5 p. 446 | MSI-T p. 452 | MSI-MC310 p. 458

Important technical data, overview

Performance Level (PL) in accordance with EN ISO 13849-1	e
Category in accordance with EN ISO 13849	Up to 4 (depending on the category of the upstream protective device)
Stop category in accordance with EN IEC 60204-1	STOP 0
Supply voltage	24 V AC/DC –15 % to +10 %
Safety-related switching outputs (OSSDs)	2 relay outputs (N/O)
Signal output	Relay output (N/C)
Response time	20 ms
Ambient temperature, operation	-25... +55°C
Dimensions (W x H x D)	22.5 mm x 99 mm x 113.6 mm

Functions

- Two-hand relay in accordance with EN 574 Type III C
- Automatic start/restart
- Static contactor monitoring (EDM)
- Simultaneity monitoring of the two-hand buttons
- Cross circuit monitoring

Special features

- **Controlled start by checking the feedback circuit and button contacts**
- **Two-channel control with cross circuit monitoring**
- **Simultaneity monitoring, 0.5 s**
- **2 release circuits, 1 NC contact as signal circuit**
- **Potential-free safety-related switching outputs**
- **LED displays: K1, K2, supply voltage**
- **Housing width, 22.5 mm**

Features

Further information

SAFETY RELAYS

Ordering information

MSI-2H
Included in delivery: Connecting and operating instructions (PDF file on CD-ROM)

Functions: Two-hand control relay in accordance with EN 574 type III C and protective door monitors in accordance with EN IEC 60204-1 stop category STOP 0

MSI-2H
Safety Relay, category 4

Art. no.	Article	Description
549912	MSI-2H	E-Stop relay, category 4, for connecting two-hand control devices

Electrical connection

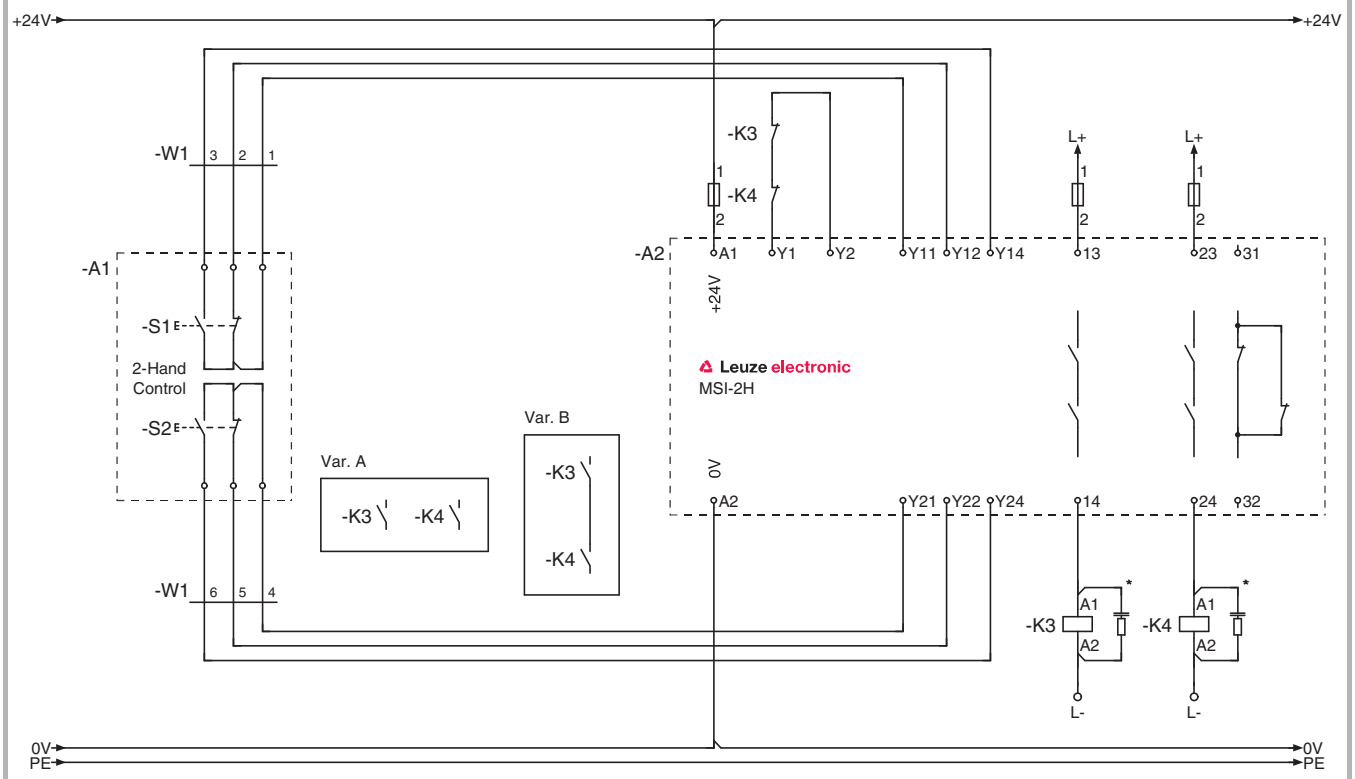

*) Spark extinction circuit, supply suitable spark extinction

MSI-2H *as two-hand control unit in accordance with* EN 574 type III C

⚠ Please observe the operating instructions of the components!

MSI-RM2 p. 428	**MSI-2H p. 434**	MSI-SR4 p. 440	MSI-SR5 p. 446	MSI-T p. 452	MSI-MC310 p. 458

Technical data

General system data		
Performance Level (PL) in accordance with EN ISO 13849-1	e	
Category in accordance with EN ISO 13849	Up to 4 (depending on the category of the upstream protective device)	
Service life (T_M) in accordance with EN ISO 13849-1	20 years	
Probability of a failure to danger per hour (PFH_d)	3.80×10^{-8}	
Number of cycles until 10% of the components have a failure to danger (B_{10d})	With DC1 (ohmic load)	400.000
	With AC1 (ohmic load)	
	With DC13 (inductive load)	
	With AC15 (inductive load)	
	Low load (20% nominal load)	20.000.000
Mean time to dangerous failure ($MTTF_d$) in accordance with EN ISO 13849-1	70 years	
Stop category in accordance with EN IEC 60204-1	STOP 0	
Supply voltage	24 V AC/DC –15 % to +10 %	
Power consumption	2.1 W (AC) / 1.9 W (DC)	
Safety-related switching outputs (OSSDs)	2 relay outputs (N/O)	
Signal output	Relay output (N/C)	
Continuous current per current path	Max. 3 A	
Response time	20 ms	
Restart delay time	50 ms	
Time window for simultaneity monitoring	Max. 0.5 s	
Admissible input line resistance	<70 Ω	
Ambient temperature, operation	-25... +55°C	
Protection rating	IP 20	
Connection system	Screw terminals	
Dimensions (W x H x D)	22.5 mm x 99 mm x 113.6 mm	
Mounting	On 35 mm DIN rail	

Please note the additional information in the connecting and operating instructions and at www.leuze.com/relays.

Dimensional drawings

MSI-2H Safety Relay

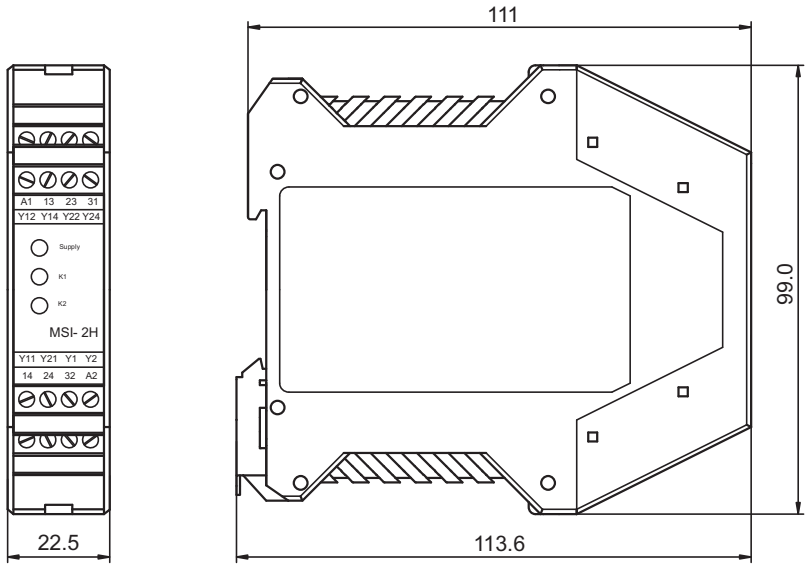

Dimensions in mm

Our 3D CAD models can be found at: www.leuze.com/3d-cad-models.

SAFETY RELAYS

MSI-SR4

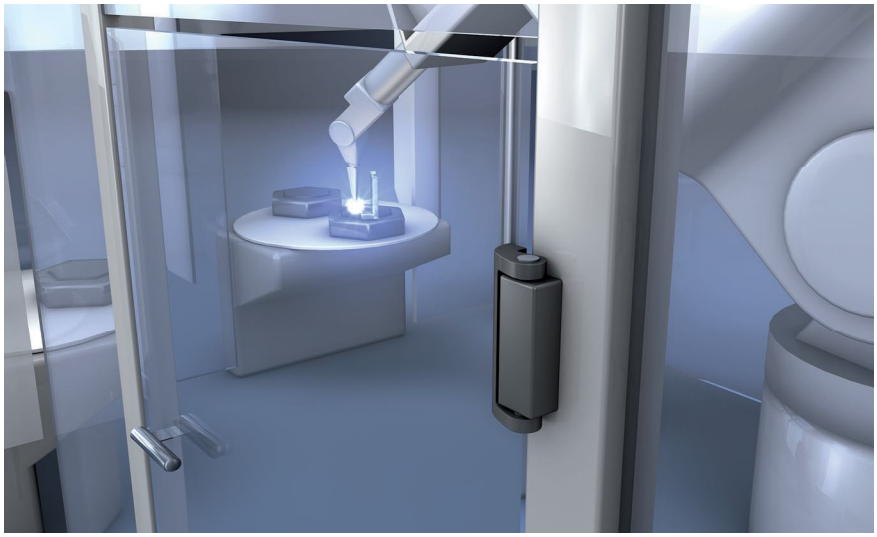

Guarding a robot area with S400 *Safety Switch and* MSI-SR4 *Safety Relay*

If Safety Switches or optoelectronic protective devices are used for guarding danger zones, as the standard link the MSI-SR4 Safety Relay establishes the connection to the machine control system. The relay acts as an E-Stop relay or protective door monitor in accordance with EN IEC 60204-1, STOP-0. The MSI-SR4 equipment includes the evaluation of input signals using relay or transistor outputs as well as three safety-related switching outputs and a signal output. A wide range of applications can therefore be covered. The short response time of only 10 ms is especially advantageous. A very compact construction of the machines is therefore possible with hand and finger protection in particular. The MSI-SR4 is easy to connect because of the unambiguous assignment of the functions – this guarantees time-saving installation.

Typical areas of application

- Two-channel E-Stop circuit
- MSI-SR4 is the preferred option as two-channel protective door monitoring
- MSI-SR4 is the preferred option as sequential circuit for Safety Light Devices, type 4, with relay or transistor outputs

MSI-RM2 p. 428 | MSI-2H p. 434 | **MSI-SR4 p. 440** | MSI-SR5 p. 446 | MSI-T p. 452 | MSI-MC310 p. 458

Important technical data, overview

SIL in accordance with IEC 61508 and SILCL in accordance with EN IEC 62061	3
Performance Level (PL) in accordance with EN ISO 13849-1	e
Category in accordance with EN ISO 13849	4 (depending on the category of the upstream protective device)
Stop category in accordance with EN IEC 60204-1	STOP 0
Supply voltage	24 V AC/DC ±20%
Safety-related switching outputs (OSSDs)	3 relay outputs (N/O)
Signal output	1 relay output (N/C)
Response time	10 ms
Restart delay time (automatic start)	300 ms
Ambient temperature, operation	0...+55°C
Ambient temperature, storage	-25...+70°C
Dimensions (W x H x D)	22.5 mm x 99 mm x 113.6 mm

Functions

Automatic start/restart
Start/restart interlock (RES), optionally with/without
Static contactor monitoring (EDM)
Cross circuit monitoring

Special features

- **Housing width, 22.5 mm**
- **Very short response time**
- **Monitored reset button**
- **3 release circuits, 1 N/C contact as signal circuit**
- **Potential-free safety-related switching outputs**
- **LED displays: K1, K2, supply voltage, RES**

Features

Further information

SAFETY RELAYS

Ordering information

MSI-SR4
Included in delivery: 1 set of connecting and operating instructions (PDF file on CD-ROM)

Functions: E-Stop relay and protective door monitor in accordance with EN IEC 60204-1 stop category STOP 0, EN 13849-1 category 4, PL e

MSI-SR4
Safety Relay, category 4

Art. no.	Article	Description
549986	MSI-SR4	E-Stop relay

Electrical connection, MSI-SR4 connection example

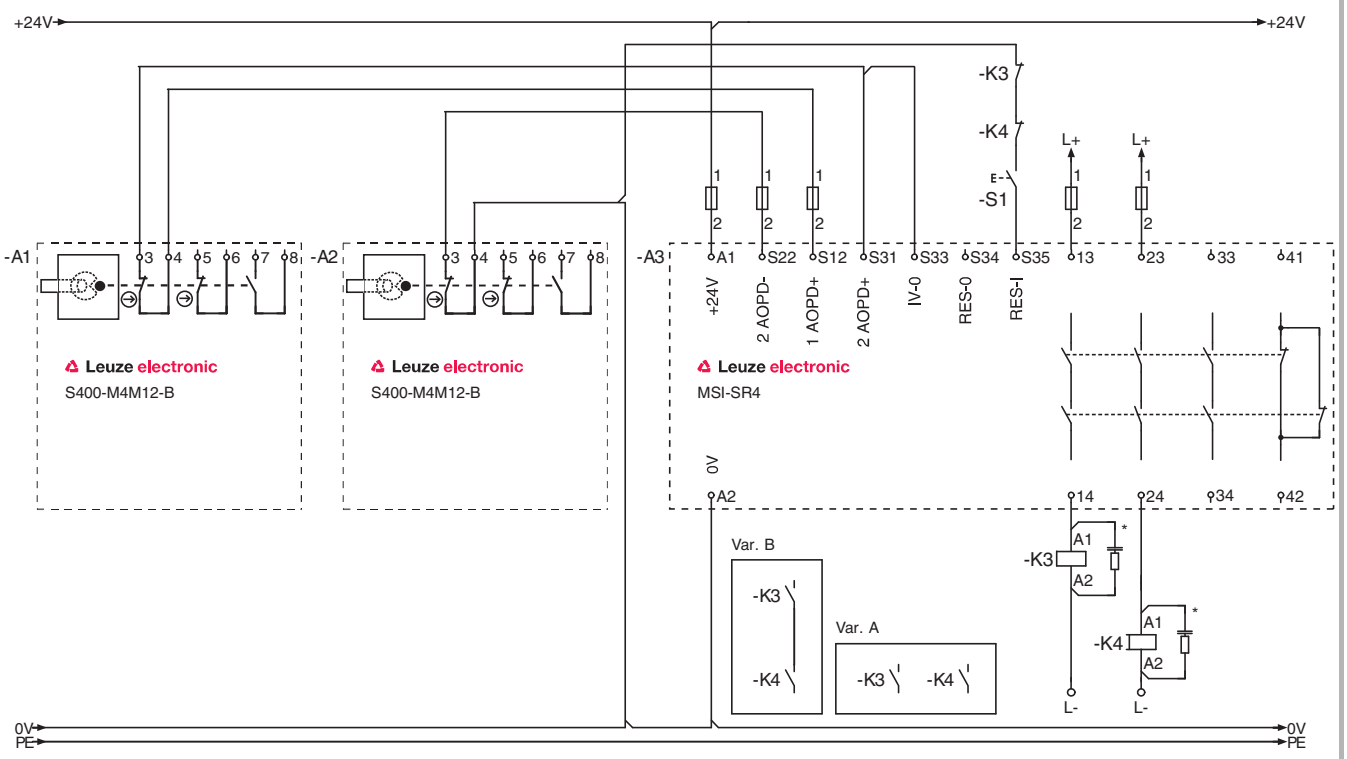

*) Spark extinction circuit, supply suitable spark extinction

MSI-SR4 *as link between* S400 *Safety Hinge Switches and machine control system*

⚠ Please observe the operating instructions of the components!

MSI-RM2 p. 428 | MSI-2H p. 434 | MSI-SR4 p. 440 | MSI-SR5 p. 446 | MSI-T p. 452 | MSI-MC310 p. 458

Electrical connection

MSI-SR4 connection example

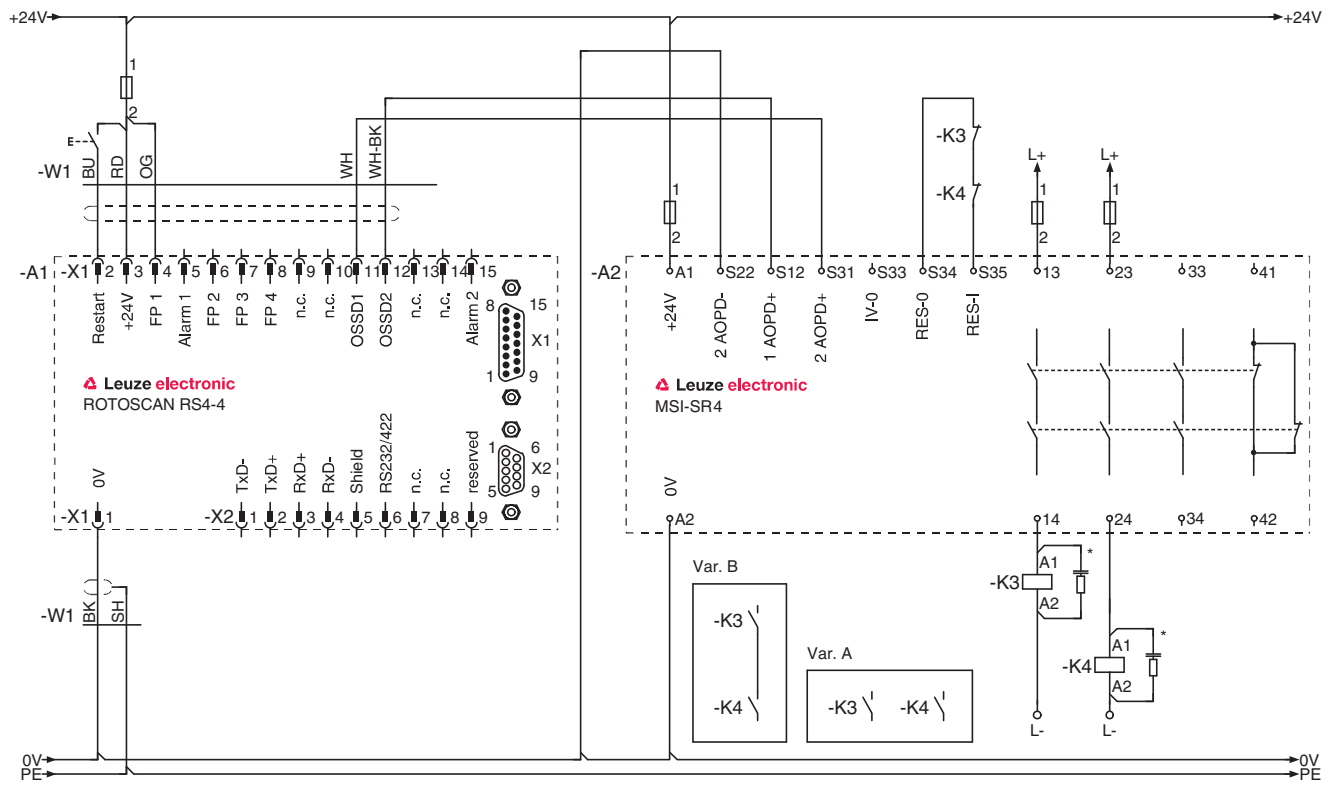

*) Spark extinction circuit, supply suitable spark extinction

MSI-SR4 *as link between* ROTOSCAN RS4 *Laser Scanners and the machine control system*

⚠ Please observe the operating instructions of the components!

SAFETY RELAYS

Technical data

General system data		
SIL in accordance with IEC 61508 and SILCL in accordance with EN IEC 62061	3	
Performance Level (PL) in accordance with EN ISO 13849-1	e	
Service life (T_M) in accordance with EN ISO 13849-1	20 years	
Probability of a failure to danger per hour (PFH_d) in accordance with the average number of annual n_{op} activations (for the calculation formula, see EN ISO 13849-1:2008, chapter C.4.2 and C.4.3)	n_{op} = 4,800	1.4×10^{-9}
	n_{op} = 28,800	4.5×10^{-9}
	n_{op} = 86,400	1.5×10^{-8}
Number of cycles until 10% of the components have a failure to danger (B_{10d})	With DC1 (ohmic load)	1,000,000 (3 A, 24 V)
	With AC1 (ohmic load)	1,400,000 (5 A, 230 V)
	With DC13 (inductive load)	1,000,000 (3 A, 24 V)
	With AC15 (inductive load)	1,400,000 (5 A, 230 V)
	Low load (20% nominal load)	On request
Category in accordance with EN ISO 13849	4 (depending on the category of the upstream protective device)	
Mean time to dangerous failure ($MTTF_d$) in accordance with EN ISO 13849-1	73 years	
Stop category in accordance with EN IEC 60204-1	STOP 0	
Supply voltage	24 V AC/DC ± 20 %	
Power consumption	3 W	
Safety-related switching outputs (OSSDs)	3 relay outputs (N/O)	
Signal output	1 relay output (normal closed contact)	
Continuous current per current path	Max. 3 A	
Response time	10 ms	
Restart delay time (manual start)	30 ms	
Restart delay time (automatic start)	300 ms	
Input current	Max. 100 mA	
Admissible input line resistance	<70 Ω	
Ambient temperature, operation	0...+55°C	
Ambient temperature, storage	-25...+70°C	
Protection rating	IP 20	
Connection system	Screw terminals	
Dimensions (W x H x D)	22.5 mm x 99 mm x 113.6 mm	
Mounting	On 35 mm DIN rail	

Please note the additional information in the connecting and operating instructions and at www.leuze.com/relays.

Dimensional drawings

MSI-SR4 Safety Relay

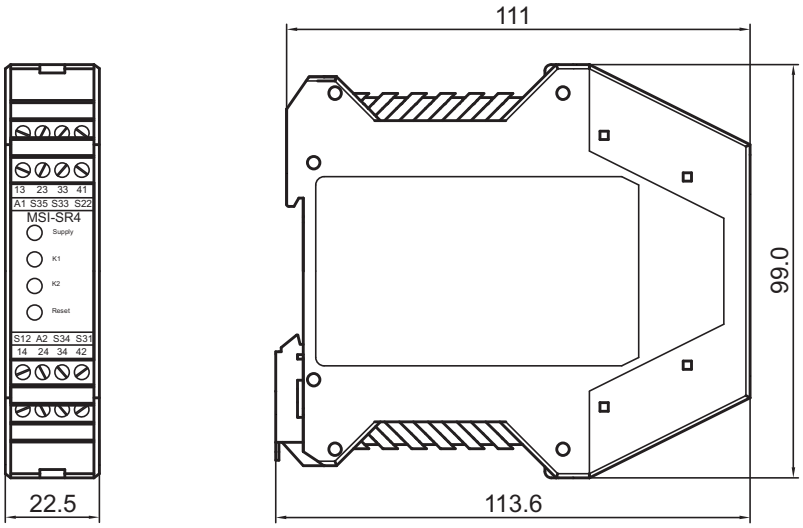

Dimensions in mm

Our 3D CAD models can be found at: www.leuze.com/3d-cad-models.

SAFETY RELAYS

MSI-SR5

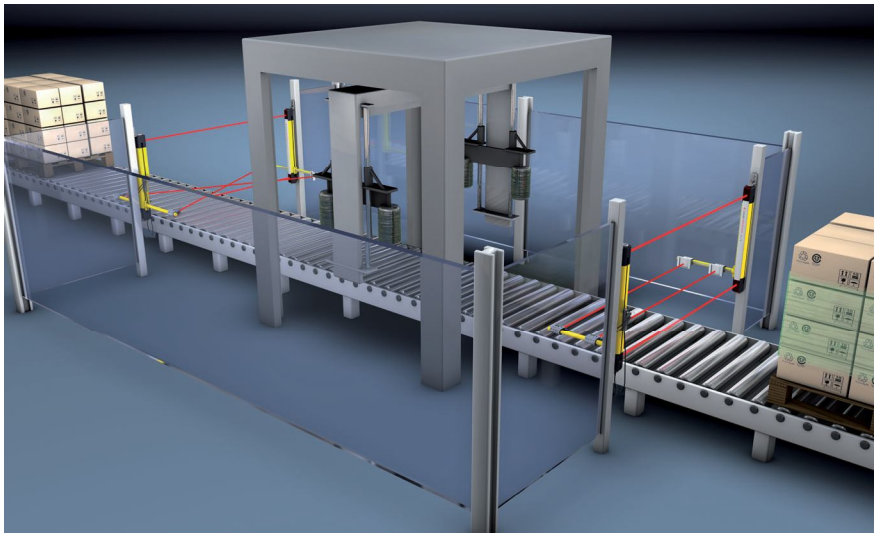

Safeguarding the entry and exit on a muting system

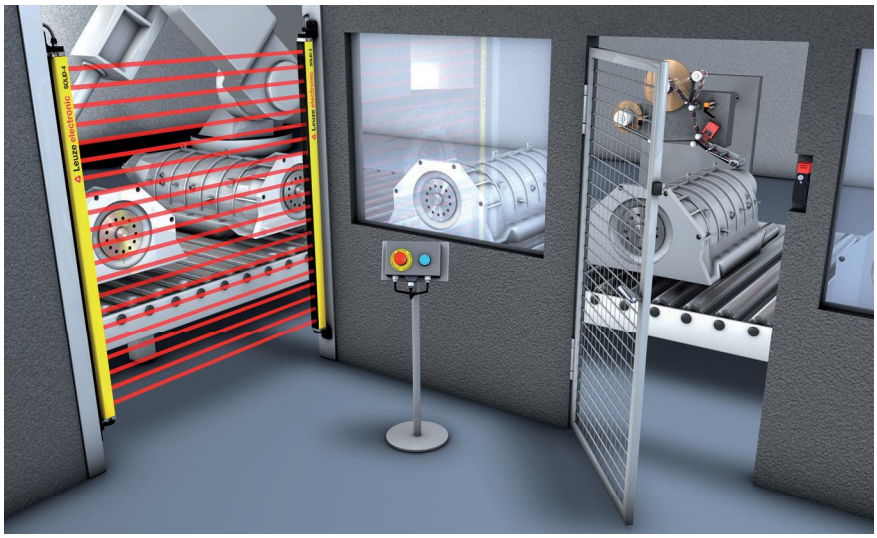

Safeguarding an assembly station and a service door

Only rarely are safety sensors used individually. Usually, several sensors that act together on a single switch-off circuit are used, e.g. access guarding with a Multiple Light Beam Safety Device and a protective door to the danger zone. Or if a Multiple Light Beam Safety Device is used at both the entry and the exit of a robot cell for safeguarding. In the case of point of operation guarding with a Safety Light Curtain and a Multiple Light Beam Safety Device for rear zone guarding of a press, the sensors must likewise be connected to a common switch-off circuit. The MSI-SR5 Safety Relay can perform these tasks economically. Here, two devices can be connected at the entries, either with two transistor OSSDs or by designing as a two-channel contact circuit. Furthermore, the start/restart interlock and contactor monitoring functions are available. The compact construction and function selection by means of wiring make possible simple, space-saving and economical applications.

Typical areas of application

- Connection of two pieces of electro-sensitive protective equipment with integrated muting function in the entry and exit of muting systems.
- Combined connection of one piece of electro-sensitive protective equipment and one safety-oriented switch, e.g. access safeguarding and service door.
- Combined connection of two safety-oriented switches on moveable guards.
- Combined connection of two or more E-Stop command devices.

MSI-RM2 p. 428 | MSI-2H p. 434 | MSI-SR4 p. 440 | **MSI-SR5 p. 446** | MSI-T p. 452 | MSI-MC310 p. 458

Important technical data, overview

SIL in accordance with IEC 61508 and SILCL in accordance with EN IEC 62061	3
Performance Level (PL) in accordance with EN ISO 13849-1	e
Category in accordance with EN ISO 13849	4 (depending on the category of the upstream protective device)
Stop category in accordance with EN IEC 60204-1	STOP 0
Supply voltage	24 V AC/DC ±20%
Safety-related switching outputs (OSSDs)	2 relay outputs (N/O)
Response time	10 ms
Restart delay time (automatic start)	350 ms
Ambient temperature, operation	0...+55°C
Ambient temperature, storage	-25...+70°C
Dimensions (W x H x D)	22.5 mm x 99 mm x 113.6 mm

Functions

Monitoring of two sensors
Start/restart interlock (RES), optionally with/without
Static contactor monitoring (EDM)
Cross circuit monitoring

Special features

- **Very short response time**
- **Monitored reset button**
- **Evaluation of two (possibly different) sensors**
- **LED displays: K1, K2, supply voltage, RES**
- **Housing width, 22.5 mm**
- **Potential-free safety-related switching outputs**

Features

Further information

SAFETY RELAYS

Ordering information

MSI-SR5
Included in delivery: 1 set of connecting and operating instructions (PDF file on CD-ROM)

Functions: E-Stop relay and protective door monitor in accordance with EN IEC 60204-1 stop category STOP 0, EN 13849-1 category 4, PL e

MSI-SR5
Safety Relays

Art. no.	Article	Description
549991	MSI-SR5	E-Stop relay with separate monitoring of two sensors

Electrical connection, MSI-SR5 connection example

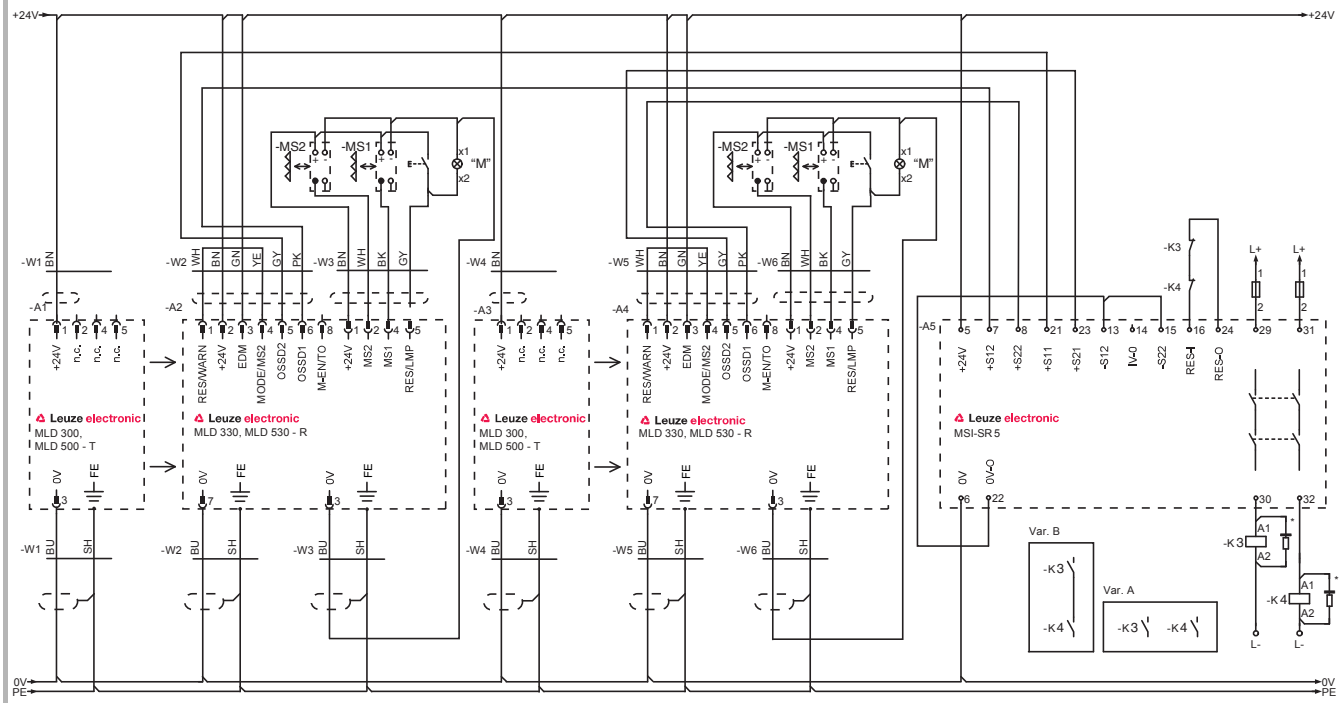

*) Spark extinction circuit, supply suitable spark extinction

MSI-SR5 *with two* MLD 330 *or* MLD 530 *Multiple Light Beam Safety Devices*

⚠ Please observe the operating instructions of the components!

MSI-RM2 p. 428	MSI-2H p. 434	MSI-SR4 p. 440	**MSI-SR5 p. 446**	MSI-T p. 452	MSI-MC310 p. 458

Electrical connection

MSI-SR5 connection example

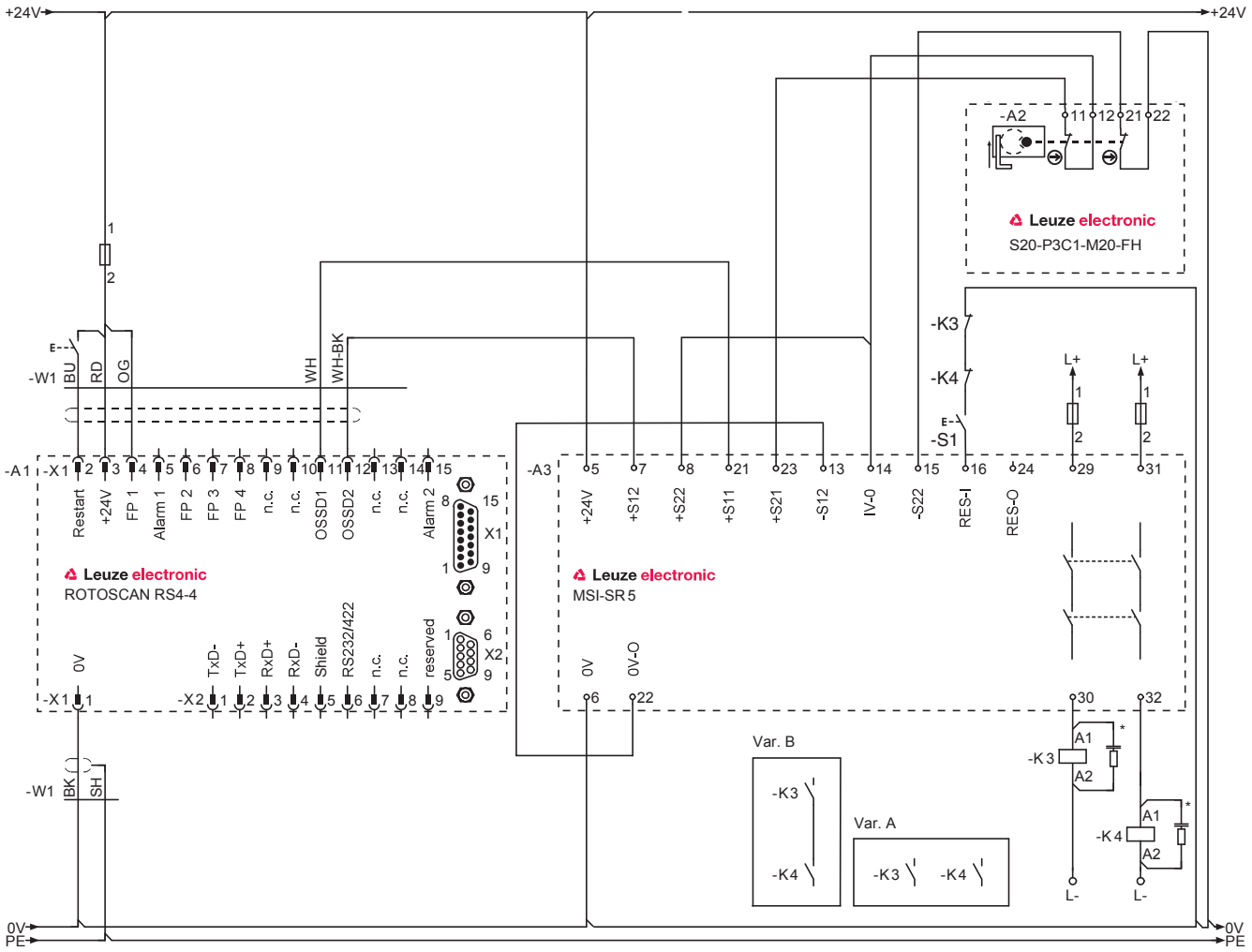

*) Spark extinction circuit, supply suitable spark extinction

MSI-SR5 *with* ROTOSCAN RS4 *Safety Laser Scanner and* S20 *Safety Switch*

⚠ Please observe the operating instructions of the components!

SAFETY RELAYS

Technical data

General system data		
SIL in accordance with IEC 61508 and SILCL in accordance with EN IEC 62061	3	
Performance Level (PL) in accordance with EN ISO 13849-1	e	
Service life (T_M) in accordance with EN ISO 13849-1	20 years	
Probability of a failure to danger per hour (PFH_d) in accordance with the average number of annual n_{op} activations (for the calculation formula, see EN ISO 13849-1:2008, chapter C.4.2 and C.4.3)	n_{op} = 4.800	$1x10^{-8}$
	n_{op} = 28.800	$2x10^{-8}$
	n_{op} = 86.400	$5x10^{-8}$
Number of cycles until 10% of the components have a failure to danger (B_{10d})	With DC1 (ohmic load)	400.000
	With AC1 (ohmic load)	
	With DC13 (inductive load)	
	With AC15 (inductive load)	
	Low load (20% nominal load)	2.500.000
Category in accordance with EN ISO 13849	4 (depending on the category of the upstream protective device)	
Mean time to dangerous failure ($MTTF_d$) in accordance with EN ISO 13849-1	73 years	
Stop category in accordance with EN IEC 60204-1	STOP 0	
Supply voltage in accordance with IEC 60742	24 V AC/DC ± 20 %	
Power consumption	4,8 W	
Safety-related switching outputs (OSSDs)	2 relay outputs (N/O)	
Continuous current per current path	Max. 3 A	
Response time	10 ms	
Restart delay time (manual start)	50 ms	
Restart delay time (automatic start)	350 ms	
Current consumption (without external load)	Max. 150 mA	
Admissible input line resistance	<30 Ω	
Ambient temperature, operation	0...+55°C	
Ambient temperature, storage	-25...+70°C	
Protection rating	IP 20	
Connection system	Screw terminals	
Dimensions (W x H x D)	22.5 mm x 99 mm x 113.6 mm	
Mounting	On 35 mm DIN rail	

Please note the additional information in the connecting and operating instructions and at www.leuze.com/relays.

Dimensional drawings

MSI-SR5 Safety Relay

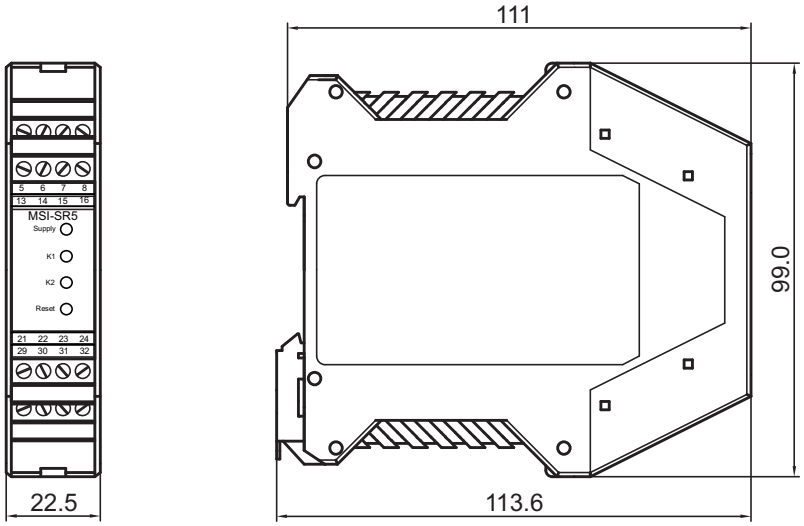

Dimensions in mm

Our 3D CAD models can be found at: www.leuze.com/3d-cad-models.

SAFETY RELAYS

MSI-T

Guarding a wood processing center with SLSR 46B *Single Light Beam Safety Devices and* MSI-T *safety monitoring device*

MSI-T is a safety monitoring device for the periodic testing of "testable" optoelectronic protective devices. The two components, both the safety sensor as well as the MSI-T relay, together form an AOPD acc. to EN IEC 61496-1, -2. Up to 6 type 2 sensors can be connected to the MSI-T via a series connection. In addition to testable Leuze electronic type 2 Single Light Beam Safety Devices, type 2 Multiple Light Beam Safety Devices of the MLD 300 series can also be connected to the relay. The machine's functional sequence remains unimpaired by the periodic internal function tests.

Typical areas of application

- Print and paper processing machinery in accordance with EN 1010
- Power-operated windows, doors and gates in accordance with ZH 1/494
- Storage installations in accordance with ZH 1/482 and DIN 15185/2
- Textile machinery in accordance with VGB 76 or DIN ISO 11111
- Packaging machinery in accordance with VBG 76 or prEN 415-2, 3 and 4
- Meat processing machinery in accordance with VBG 79
- Machinery used in the chemicals, rubber and plastics industries in accordance with VBG 22
- Wood processing machinery in accordance with ZH 3.1 to 3.19 and ZH 1/56a

MSI-RM2 p. 428 | MSI-2H p. 434 | MSI-SR4 p. 440 | MSI-SR5 p. 446 | **MSI-T p. 452** | MSI-MC310 p. 458

Important technical data, overview

Type in accordance with EN IEC 61496	2
Performance Level (PL) in accordance with EN ISO 13849-1: 2008	Up to d
Category in accordance with EN ISO 13849-1	2
Supply voltage	24 V DC ±20 %
Response time	<20 ms
Start-up delay	Approx. 2 s
Ambient temperature, operation	-20...+60°C
Dimensions (W x H x D)	22.5 mm x 99 mm x 113.6 mm

Functions

- Safety monitoring device for periodic testing of up to 6 type 2 sensors
- Multiple monitoring of type 2 sensors with series connection
- Start/restart interlock (RES), optionally with/without
- Static contactor monitoring (EDM), with/without optional
- "Safety on" signal output
- "Error" signal output

Special features

- **Constant cyclical testing every 2 s without process interruption of the machine function during the test**
- **2 Safety Relay outputs with internal monitoring**
- **Filter time 130 ms (MSI-TR2)**
- **STOP1 function (MSI-TS)**
- **LED indicators for all important functions and operating states.**
- **Low space-requirement in the cabinet with compact construction**

Features

Further information

SAFETY RELAYS

Ordering information

MSI-T
Included in delivery: 1 set of connecting and operating instructions, (PDF file on CD-ROM)

Functions: Periodic function test, start/restart interlock selectable, contactor monitoring (EDM) selectable, "Error" signal output, "Safety ON" signal output (MSI-TR1 and MSI-TR2 only), "STOP1" signal output (MSI-TS only)

MSI-T
Safety Relays

Art. no.	Article	Description
549988	MSI-TR1	Safety Relay for periodic testing of type 2 sensors
549990	MSI-TR2	Safety Relay for periodic testing of type 2 sensors with filter time 130 ms
549989	MSI-TS	Safety Relay for periodic testing of type 2 sensors with STOP1 function

Electrical connection

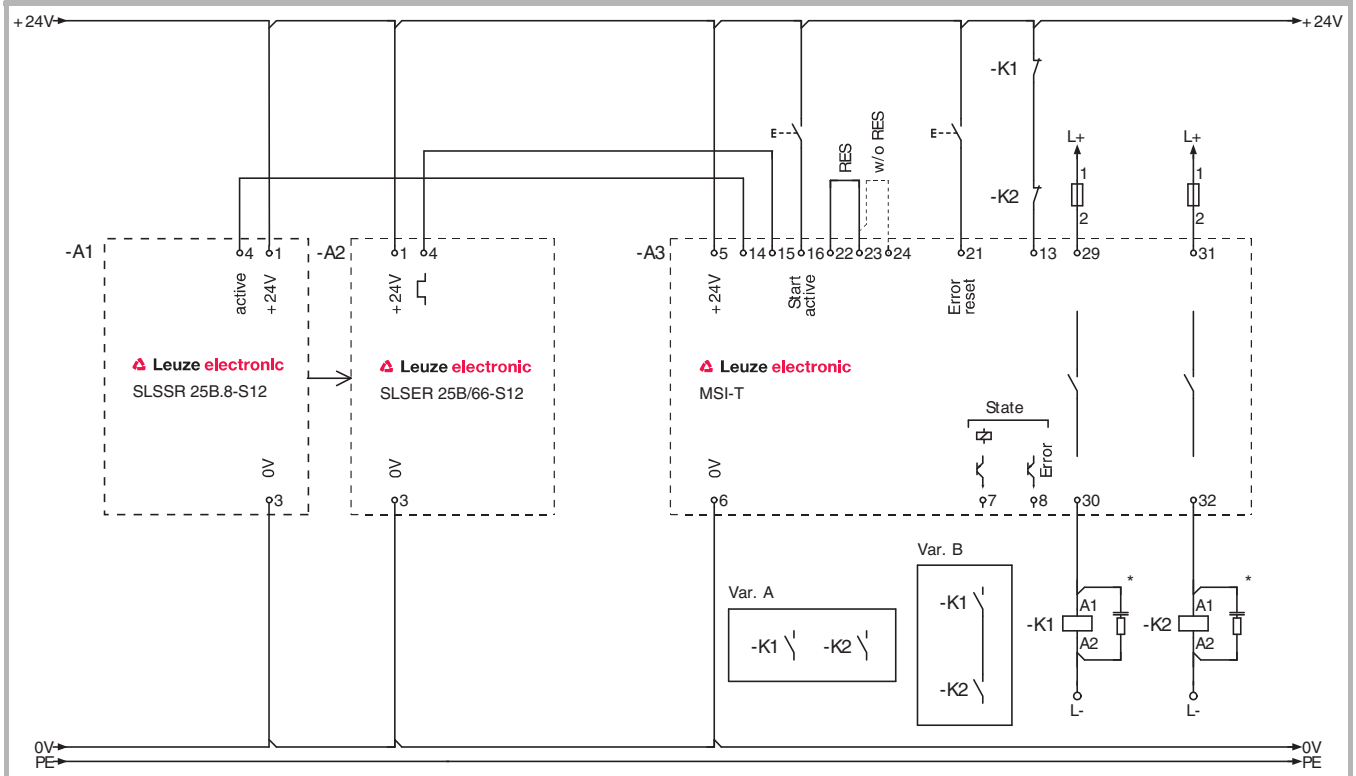

*) Spark extinction circuit, supply suitable spark extinction

MSI-T *Safety Relay with type 2* SLSR 25B *Single Light Beam Safety Device*

⚠ Please observe the operating instructions of the components!

MSI-RM2 p. 428 | MSI-2H p. 434 | MSI-SR4 p. 440 | MSI-SR5 p. 446 | MSI-T p. 452 | MSI-MC310 p. 458

Technical data

General system data	
Type in accordance with EN IEC 61496	2
Performance Level (PL) in accordance with EN ISO 13849-1: 2008	Up to d
Service life (T_M) in accordance with EN ISO 13849-1	20 years
Probability of a failure to danger per hour (PFH_d)	8.8×10^{-8}
Category in accordance with EN ISO 13849-1	2
Mean time to dangerous failure ($MTTF_d$)	75 years
Supply voltage	+24 V DC ±20 %
Current consumption	Approx. 200 mA
Response time	<20 ms
Start-up delay	Approx. 2 s
Safety class	II
Protection rating	IP 20 (only suitable for use in operating rooms/cabinets with IP 54 minimum protection rating)
Ambient temperature, operation	–20...+60°C
Ambient temperature, storage	–30...+70°C
Relative humidity (non-condensing)	0...95 %
Dimensions (W x H x D)	22.5 mm x 99 mm x 113.6 mm
Weight	Approx. 200 g
Transmitter activation	PNP (high active)
Receiver input	Input current approx. 5 mA
Start input	Input current approx. 5 mA
Reset input	Input current approx. 5 mA
Contactor monitoring (EDM)	Input current approx. 5 mA
"Safety ON" signal output	PNP transistor output, 100 mA, short-circuit and polarity reversal protection
"Error" signal output	PNP transistor output, 100 mA, short-circuit and polarity reversal protection
Safety output	Potential-free make contacts, max. switching voltage 250 V AC, max. current load 2 A
Fuse	External with max. 4 A MT
Overvoltage category	2 for rating voltage 300 V AC in accordance with VDE 0110 part 1

Please note the additional information in the connecting and operating instructions and at www.leuze.com/relays.

Dimensional drawings

MSI-T Safety Relay

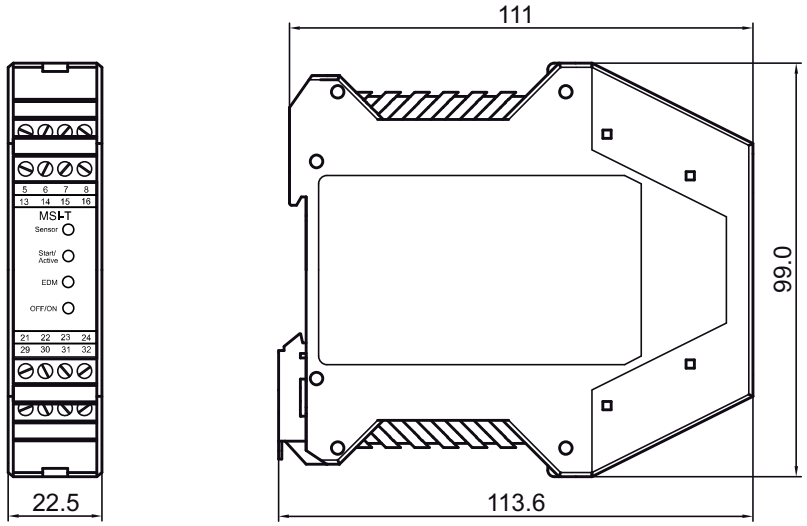

Dimensions in mm

Our 3D CAD models can be found at: www.leuze.com/3d-cad-models.

SAFETY RELAYS

MSI-MC310

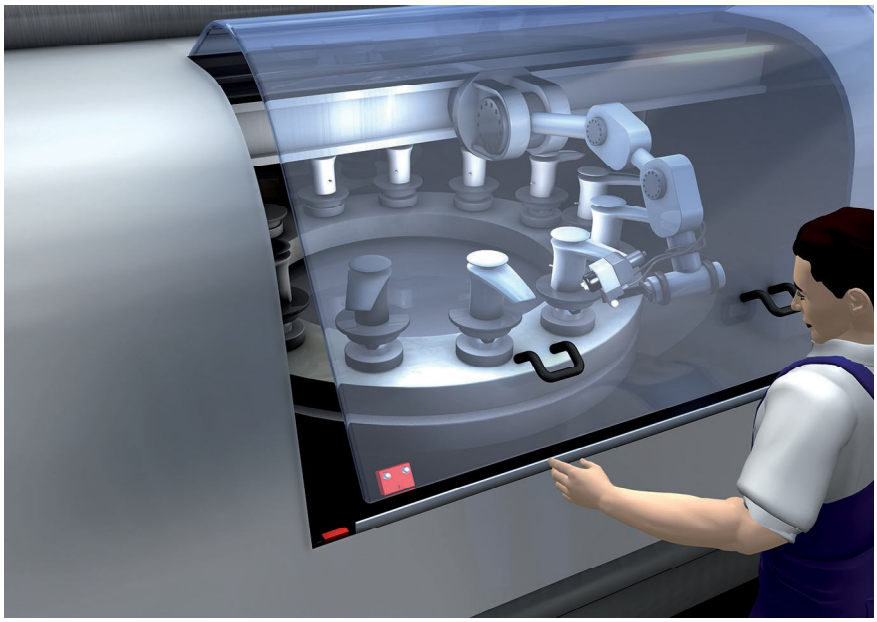

Together with the MSI-MC310 *Safety Relay, which is located in the control area of the machine, the* MC336 *Magnetically Coded Sensor safeguards a painting robot.*

The MSI-MC310 Safety Relay serves as evaluation unit for the application of Magnetically Coded Sensors. In combination with the MSI-MC310 Safety Relay, the MC3x Magnetically Coded Sensors are suitable for the integration in control circuits up to category 4 and Performance Level PL e in accordance with EN ISO 13849-1. These kinds of magnetically coded safety systems are used, for example, in the food, pharamceutical and wood industry to monitor moveable guards such as protective doors, sliding grips or flaps. Opening the protective devices triggers an E-Stop command. For guards that are accessible from behind, a reset button can be connected to the MSI-MC310 Safety Relay for manual starting.

Typical areas of application

- Application in combination with MC3x Magnetically Coded Sensors
- Construction of a safety system up to category 4 in accordance with EN ISO 13849

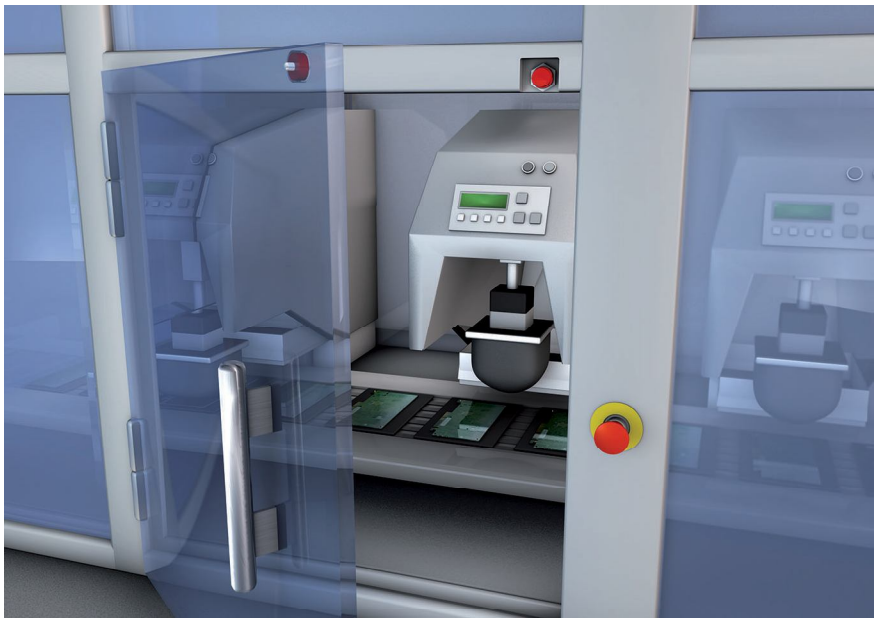

Cylindrical Magnetically Coded Sensor MC330 *for safeguarding a pad printing machine. The associated* MSI-MC310 *Safety Relay is located in the cabinet.*

MSI-RM2 p. 458 | MSI-2H p. 434 | MSI-SR4 p. 440 | MSI-SR5 p. 446 | MSI-T p. 452 | **MSI-MC310 p. 458**

Important technical data, overview

Performance Level (PL) in accordance with EN ISO 13849-1	Up to e (depending on the number of connected sensors)
Category in accordance with EN ISO 13849-1	Up to 4 (depending on the number of connected sensors)
Stop category in accordance with EN IEC 60204-1, EN 13850	STOP 0
Supply voltage	24 V AC/DC, ±10%, SELV
Output contacts, OSSDs OSSD protective circuit	2 normal open contacts (N/O), 1 normal closed contact (N/C) Provide suitable spark extinction (via relays, contactors)
Regression delay, response time	20 ms
Ambient temperature, operation Relative humidity (non-condensing)	0...+55°C 4% ...100%
Ambient temperature, storage Relative humidity (non-condensing)	-25...+70°C 5 % ...95 %
Dimensions (W x H x D)	22.5 mm x 99 mm x 113.6 mm

Functions

Evaluation unit for the construction of a safety system in combination with MC3x Magnetically Coded Sensors
Up to 30 sensors can be connected in serial combination
Stop function
Start/restart interlock /RES
Contactor monitoring (EDM) in start circuit

Special features

- **Compact housing**
- **All Magnetically Coded Sensors (1NC/1NO) from Leuze electronic are connectable**
- **Automatic and start/restart operation**

Features

Further information

SAFETY RELAYS

Ordering information

MSI-MC310
Included in delivery: 1 set of connecting and operating instructions (PDF-file on CD-ROM)
Notice: for certified evaluation of MC3x Magnetically Coded Sensors, the MSI-MC310 Safety Relay is required!

Functions: Evaluation unit for the construction of a safety system in combination with MC3x Magnetically Coded Sensors (max. 30 sensors connectable in series), automatic and start/restart operation

MSI-MC310 Safety Relay

Art. no.	Article	Description
549941	MSI-MC310	Safety Relay

Electrical connection

MSI-MC310 connection example

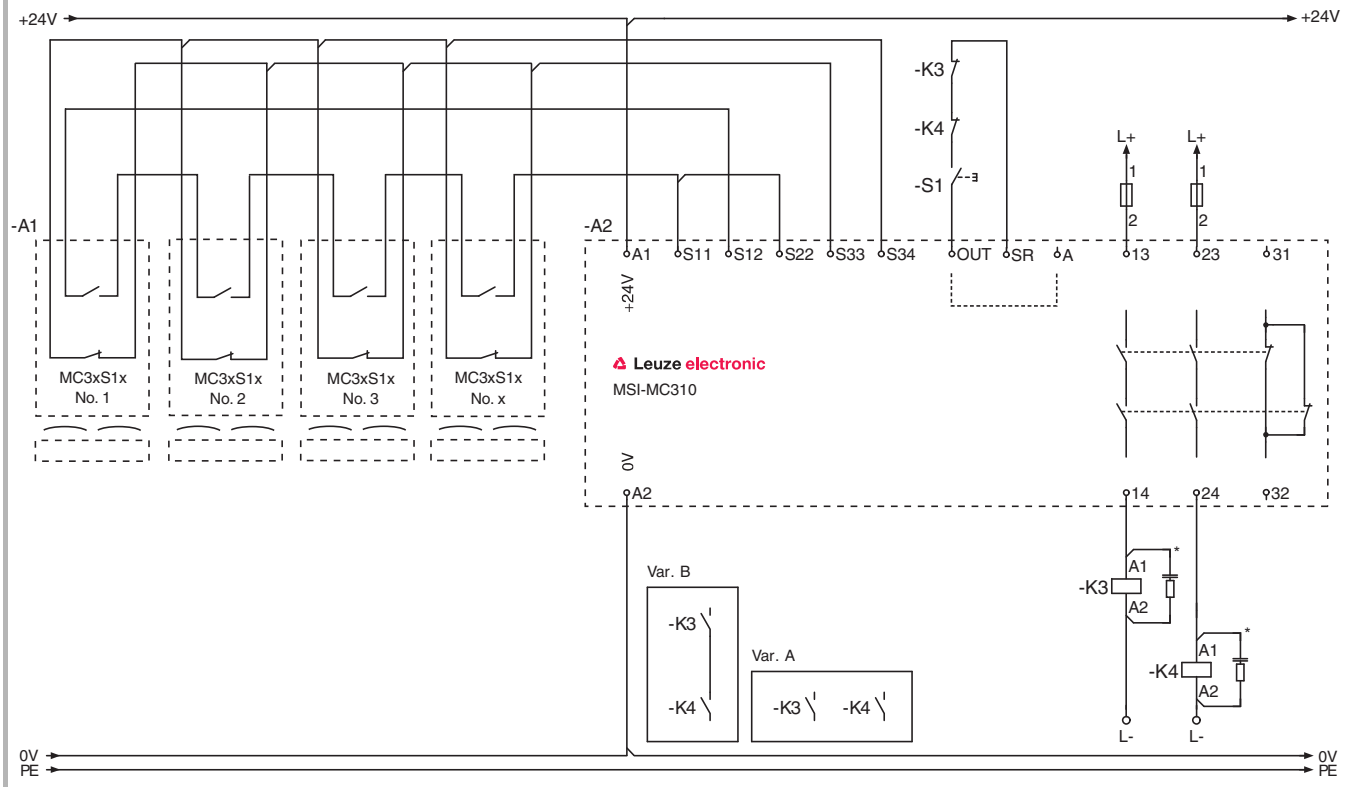

*) Spark extinction circuit, supply suitable spark extinction

Magnetically Coded Sensors with MSI-MC310 *Safety Relay, category 3, Performance Level PL e*

⚠ Please observe the operating instructions of the components!

Electrical connection

MSI-MC310 connection example

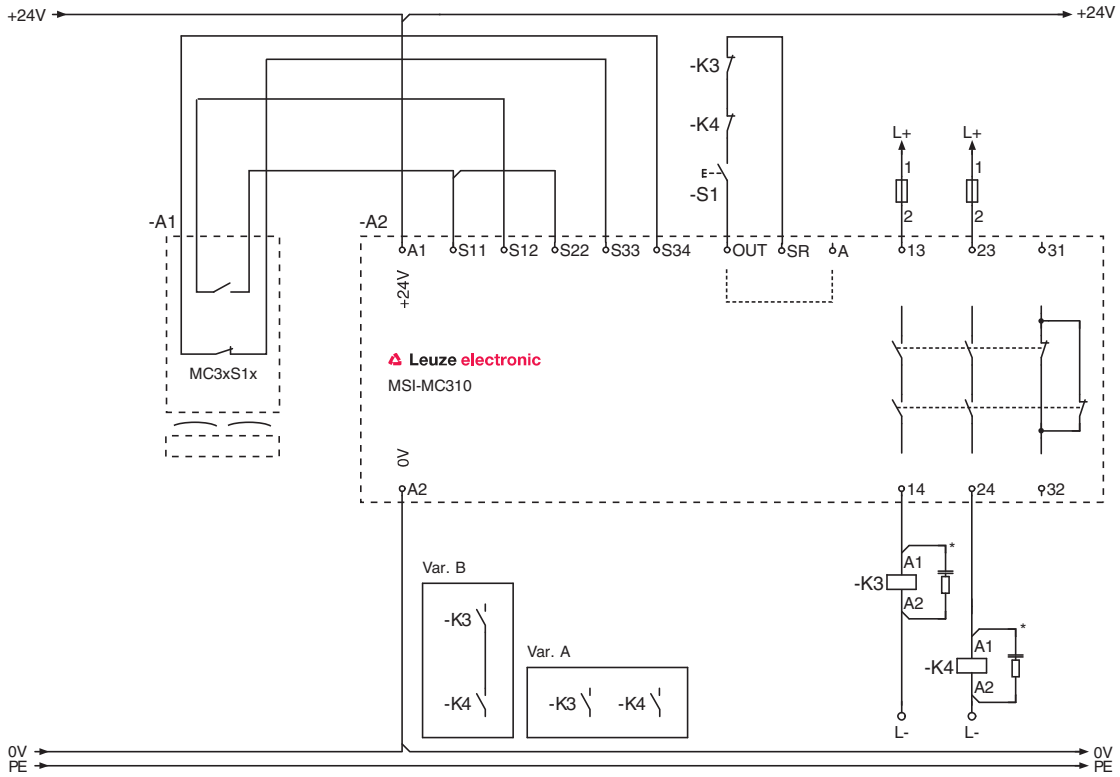

*) Spark extinction circuit, supply suitable spark extinction

Magnetically Coded Sensor with MSI-MC310 *Safety Relay, category 4, Performance Level PL e*

⚠ Please observe the operating instructions of the components!

Technical data

General system data			
Performance Level (PL) in accordance with EN ISO 13849-1	e	e	d
Category in accordance with EN ISO 13849-1	Up to 4, depending on evaluation, 1 sensor connected	Up to 4, depending on evaluation, more than 1 sensor connected	
Service life (T_M) in accordance with EN ISO 13849-1	20 years		
Average probability of a dangerous failure per hour (PFH_d) with a mean annual number of switching cycles performed by the relay (n_{op})	2.47×10^{-8}	4.29×10^{-8}	1.03×10^{-7}
AC-15 I = 0.9 A	29500	29500	65000
DC-13 I = 0.1 A	97000	97000	261000
I = 1 A	75000	75000	128000
I = 1.5 A	18000	18000	31500
Number of switching cycles at which up to 10% of components have failed dangerously (B_{10d})	2.000.000		
Mean time to dangerous failure ($MTTF_d$ in years)	100	100	56
Stop category in accordance with EN IEC 60204-1, EN 13850	STOP 0		
Control input SR for start/restart interlock (reset)	Potential-free N/O contact (RES-button or key switch)		
Connectable sensors	MC388, MC336, MC330 Magnetically Coded Sensor		
Contact type of the sensors	1NC / 1NO		
Max. number of sensors	30, serial		
Cable length, sensors	30 m		
Pickup delay manual start	600 ms		
Pickup delay automatic start	400 ms		
Max. activation time window between two sensor channels	500 ms		
Regression delay, response time	20 ms		
Supply voltage	24 V AC/DC, ±10%, SELV		
Max. input current at 24V DC/AC	10 mA to 110 mA / 30 mA to 150 mA		
Max. switched current, AC-1	3 A		
Min. switched current	10 mA		
Max. switching power	720 W		
Rated insulation voltage	250 V AC		
Mechanical life time	1×10^7 switching cycles		
Requirement on the voltage supply when used acc. to cULus (UL 508)	Class 2 Circuits		
Overvoltage category	II		
Output contacts, OSSDs OSSD protective circuit	2 normal open contacts (N/O), 1 normal closed contact (N/C) Provide suitable spark extinction (via relays, contactors)		
OSSD switching capacity in accordance with EN 60947-5-1	AC-15 (Ue / Ie): 240 V / 0.9 DC-13 (Ue / Ie): 24 V / 1.5 A		
Internal safeguarding of U_b	750 mA per PTC Multifuse		
External contact fuse protection in accordance with EN 60269-1	4A gG		

Technical data

Connection	
Protection rating acc. to EN 60529	Housing IP 40, terminals IP 20 for installation in cabinet or housing with protection rating of at least IP 54 required Finger-safe acc. to DIN VDE 0106 part 100, maximum stripped length of the connection cables 8 mm
Connection cross-section (GS-ET-20: 2009)	1 x 0.2 to 2.5 mm^2, fine-wired or 1 x 0.25 to 2.5 mm^2, fine-wired with wire-end sleeves 2 x 0.5 to 1.5 mm^2, fine-wired with Twin wire-end sleeves 1 x 0.2 to 2.5 mm^2, single-wired or 2 x 0.25 to 1.0 mm^2, fine-wired with wire-end sleeves 2 x 0.2 to 1.5 mm^2, fine-wired 2 x 0.2 to 1.0 mm^2, single-wired
Environment	
Ambient temperature, operation Relative humidity (non-condensing)	0...+55°C 4% ...100%
Ambient temperature, storage Relative humidity (non-condensing)	-25...+70°C 5 % ...95 %
Vibration resistance	EN 60947-5-3
Dirt levels, external, in accordance with EN 60947-1	2
EMC compliance	EN 60947-5-3 EN 61000-6-3 EN 61000-6-2 EN 55011
Housing	
Material	Plastic (PA)
Dimensions (W x H x D)	22.5 mm x 99 mm x 113.6 mm
Installation point	Arbitrary, on 35 mm DIN top-hat supporting rail in accordance with DIN EN 50022

These tables do not apply in combination with additional M12 plug or connecting cable except where these components are explicitly mentioned.

Please note the additional information in the connecting and operating instructions and at www.leuze.com/relays.

Dimensional drawings

MSI-MC310 Safety Relay

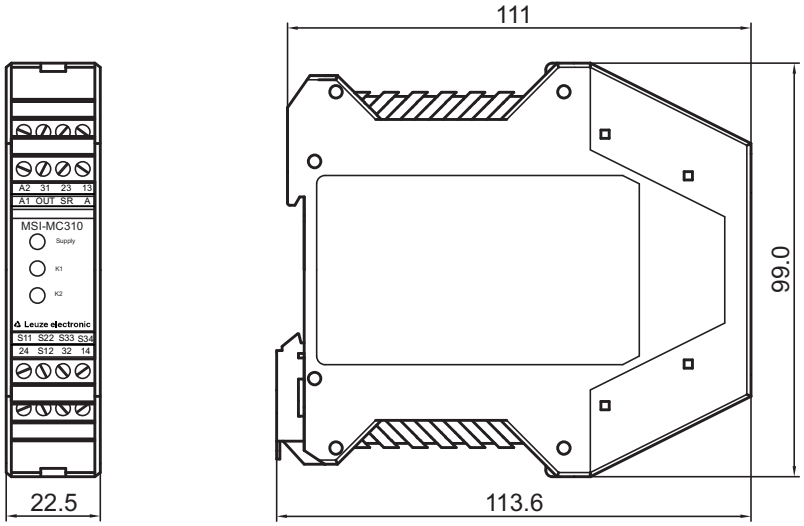

Dimensions in mm

Our 3D CAD models can be found at: www.leuze.com/3d-cad-models.

PROGRAMMABLE SAFETY CONTROLLERS

Programmable Safety Controller selection table

Control of individual safety components with programmable Safety Controllers.

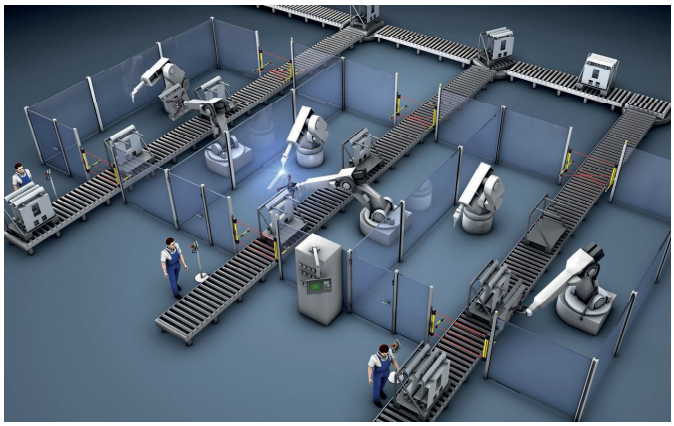

When creating safety circuits with the MSI 100 *and* MSI 200 *Safety Controllers, the* MSI*safesoft software facilitates menu-driven and trouble-free configuration.*

For small- to medium-size machines, compact safety controls are used increasingly for monitoring the safety circuit. A simple and quickly realized safety system independent of standard controls is preferred by the user. With their simple handling during start-up, flexible configuration options and broad, on-board functionality, the MSI 100 and MSI 200 programmable Safety Controllers offer an optimum system solution for small- to medium-size machines.

Based on the MSI*safesoft* programming software, the MSI 100 and MSI 200 Safety Controllers facilitate the efficient integration, communication and coordination of a machine's safety elements through the use of function modules and logic blocks. Depending on machine type, the advantage of the modularity of these safety controls becomes apparent in the simple expandability of the safety system through I/O modules and through the connection of communication modules for integration in the fieldbus level.

MSI 100
p. 468

MSI 200
p. 476

MSI-EM
p. 484

MSI-FB
p. 486

Selection table

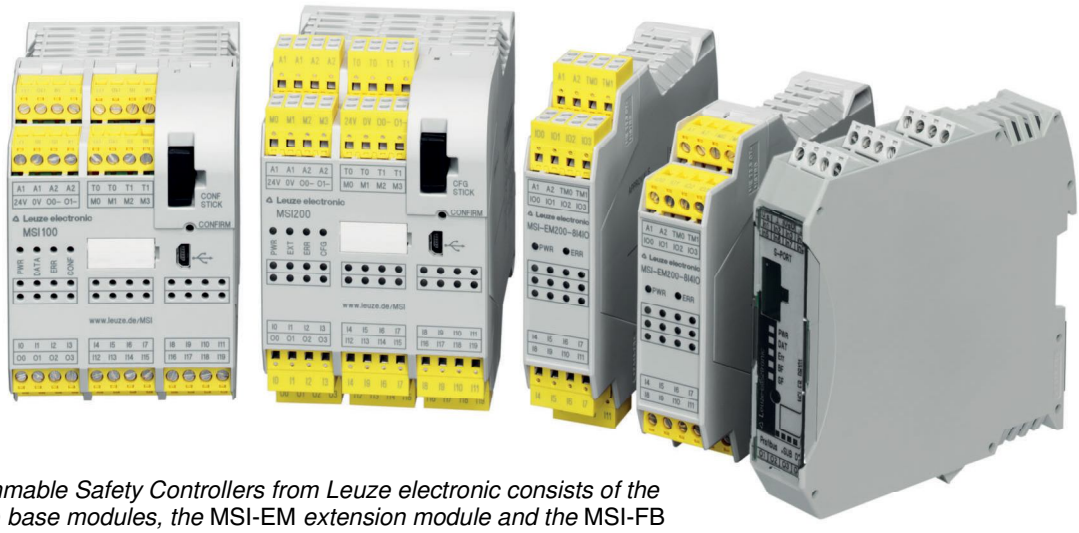

The family of programmable Safety Controllers from Leuze electronic consists of the MSI 100 *and* MSI 200 *base modules, the* MSI-EM *extension module and the* MSI-FB *fieldbus module.*

Category in accordance with EN ISO 13849	SIL in accordance with IEC 61508 and SILCL in accordance with EN IEC 62061	Performance Level (PL) in accordance with EN ISO 13849-1	Base module	Base module, expandable with MSI-EM	Additional module	Dimensions (W x H x D)	Features, type-dependent: Inputs/outputs (OSSDs)	Bus interface	Screw terminal	Spring-cage terminal	Series	Page
4	3	e	●			67.5 mm x 114.5 mm x 99 mm	20/4	With MSI-FB	●	●	MSI 100	468
			●	●		67.5 mm x 114.5 mm x 112 mm	20/4	With MSI-FB	●	●	MSI 200	476
					●	22 mm x 114.5 mm x 99 mm	8/4*		●	●	MSI-EM	484
					●	22 mm x 114.5 mm x 99 mm		PROFIBUS	●		MSI-FB**	486

*) configurable channels for input/output selectable
**) connectable to all MSI 100 and MSI 200 base modules

www.leuze.com/msi-controller/

PROGRAMMABLE SAFETY CONTROLLERS

MSI 100 Safety Controller

Programmable Safety Controllers, such as the stand-alone MSI 100 *base module, control safety within automated production processes.*

As stand-alone base module, the MSI 100 *Safety Controller monitors safety components at 20 safe inputs, e.g.* L100 *Safety Locking Devices in a blister machine.*

In automated systems, sensors and actuators must interact with one another functionally and safely. The necessary coordination is performed by the MSI 100 programmable Safety Controller. The controller monitors all safety functions, e.g. of E-Stop buttons, two-hand controls, protective doors, AOPDs and similar, in machines and systems in extremely compact form. With an overall width of just 67.5 mm, the device makes 20 safe inputs and 4 safe outputs available to the user. Additional clock- and ground-switching outputs increase the safety of the monitoring circuits. Message outputs are available for diagnostics. The programming for defining the device function can be quickly and easily performed with the MSI*safesoft* software. The software's certified function blocks, which can be integrated using drag & drop functionality, facilitate menu-driven and trouble-free configuration of every safety circuit application.

Typical areas of application

- Robot cells
- Automatic processing centers
- Packaging machinery
- Tool manufacturing

MSI 100
p. 468

MSI 200
p. 476

MSI-EM
p. 484

MSI-FB
p. 486

Important technical data, overview

SIL in accordance with IEC 61508 and SILCL in accordance with EN IEC 62061	3
Performance Level (PL) in accordance with EN ISO 13849-1	e
Category in accordance with EN ISO 13849	4
Supply voltage	24 V DC
Reaction time	<30 ms
Ambient temperature, operation	-20... +55°C
Protection rating	IP 20
Dimensions (W x H x D)	67.5 mm x 114.5 mm x 99 mm
Connection system	Plug in screw terminals, spring-cage terminals
Number of safe inputs	20 (up to SIL 3 / EN IEC 62061)
Safety-related switching outputs (OSSDs)	4 (cat. 4 / EN 13849-1 / EN 954)
Interfaces	USB, TBUS DIN rail for bus coupler

Functions

- Freely configurable safety base module
- Monitoring of all safe functions in machines and systems
- Transfers diagnostic data via MSI-FB fieldbus module (option)

Special features

- **20 safe inputs, 4 safe switching outputs (OSSDs)**
- **4 message outputs, 2 clock switching outputs, 2 ground-switching outputs**
- **Free configuration with MSI*safesoft* software**
- **Extensive device library with certified function blocks**
- **Data stick with configuration storage**
- **Designs with screw terminals as well as with spring-cage terminals**
- **Start-up set for quickly getting up to speed**

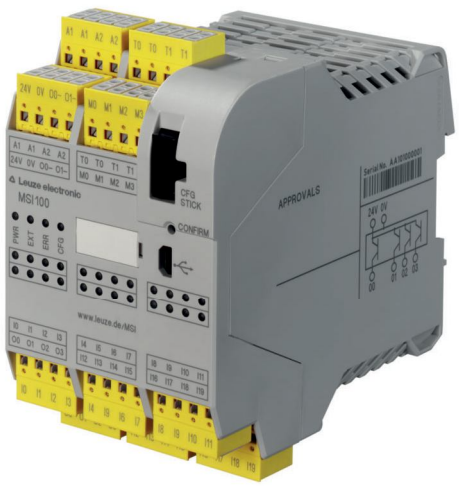

Features

Further information

PROGRAMMABLE SAFETY CONTROLLERS

Ordering information

MSI 100
Included in delivery: connecting and operating instructions, 1 terminal set, 1 data memory module, 1 TBUS Safety connection plug. Start-up set can be ordered separately.

Functions: Freely configurable safety base module, monitoring of all safety-oriented functions in machines and systems

MSI 100

Art. no.	Article	Description	Safe inputs / safety-related switching outputs (OSSDs)
547802	MSI101	Programmable MSI Safety Controller, screw terminal	20 safe inputs, 4 transistor outputs
547812	MSI102	Programmable MSI Safety Controller, spring-cage terminal	20 safe inputs, 4 transistor outputs

Electrical connection, MSI 100 connection example

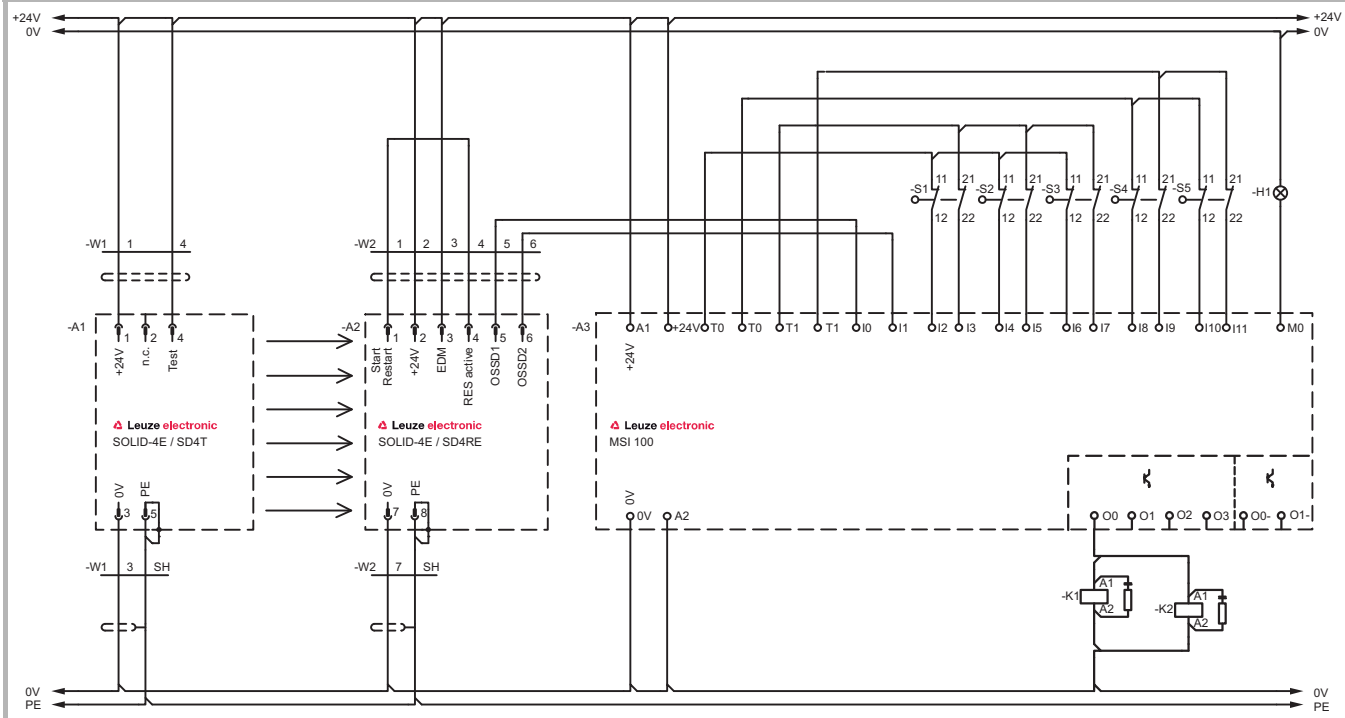

MSI 100 *with* SOLID-4E *Safety Light Curtain and several* S200 *Safety Switches*

⚠ Please observe the operating instructions of the components!

MSI 100
p. 468

MSI 200
p. 476

MSI-EM
p. 484

MSI-FB
p. 486

Technical data

General system data		
SIL in accordance with IEC 61508 and SILCL in accordance with EN IEC 62061	3	
Performance Level (PL) in accordance with EN ISO 13849-1	e	
Service life (T_M) in accordance with EN ISO 13849-1	20 years	
Probability of a failure to danger per hour (PFH_d)	1.37×10^{-8}	
Category in accordance with EN ISO 13849	4	
Mean time to dangerous failure ($MTTF_d$) in accordance with EN ISO 13849-1	8324 years	
Supply voltage	24 V DC	
Current consumption	Approx. 200 mA without external load	
Maximum reaction time	<30 ms	
Restart recovery time	<5 ms	
Readiness delay	4 s	
Protection rating	Housing	IP 20
	Connection terminals	IP 20
Ambient temperature, operation	-20... +55°C	
Ambient temperature, storage	-20... +70°C	
Dimensions (W x H x D)	67.5 mm x 114.5 mm x 99 mm	
Conductor cross-section	Screw connection	0.2...2.5 mm²
	Spring-cage connection	0.2...1.5 mm²
Housing material	Unreinforced polyamide PA	
Mounting	On 35 mm DIN rail	
Connection system	Plug-in screw terminals	
Interfaces	USB, TBUS DIN rail for bus coupler	
Input data logic		
Nominal input voltage U_N	24 V DC, -15 % to +10 %	
Typ. current consumption at U_N	200 mA	
Inputs		
Number of safe inputs	20 (up to SIL 3 / EN IEC 62061)	
Nominal voltage U_N	24 V DC (to ground A2)	
Typ. current consumption at U_N	4 mA	

Technical data

Outputs	
Safety-related switching outputs (OSSDs)	4 (cat. 4 / EN 13849-1 / EN 954)
Ground-switching outputs	2
Nominal voltage	24 V DC, -15 % to +10 %
Limiting continuous current for devices at A1 and A2 terminals (wired-through current paths A1/A1 and A2/A2)	6 A
Limiting continuous current via TBUS (when supplying external modules via TBUS)	4 A
Clock outputs	2, limiting continuous current 100 mA at 24 V DC
Signal outputs	4, limiting continuous current 100 mA at 24 V DC

Please note the additional information in the connecting and operating instructions and at www.leuze.com/controller/.

Dimensional drawings

MSI 100 programmable Safety Controller

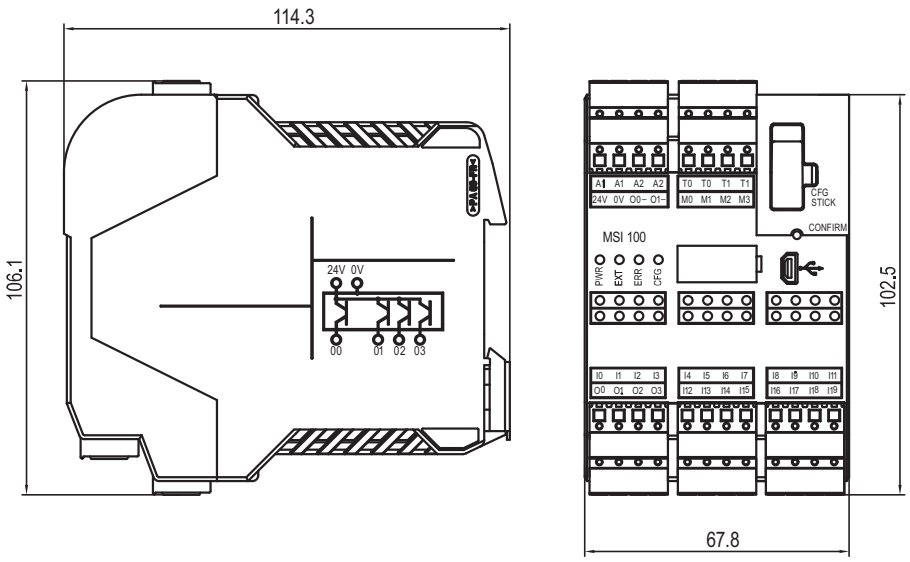

Dimensions in mm

Our 3D CAD models can be found at: www.leuze.com/3d-cad-models.

PROGRAMMABLE SAFETY CONTROLLERS

Accessories ordering information

Art. no.	Article	Description
547820	AC-MSI-CFG1	10x plug-in data memory modules
547821	AC-MSI-TCS	10x MSI TBUS safety connection plugs
547822	AC-MSI-USB	MSI USB cable MSI-PC, 2 m
547823	AC-MSI-TC	10x MSI TBUS standard connection plugs (for fieldbus gateways)
547825	MSI-SWC1	MSI start-up set (includes: CD with MSI*safesoft*, USB cable, Quick Start Guide)
MSI-FB		
547806	MSI-FB-PB101	PROFIBUS module, screw terminal

Start-up set for MSI 100, MSI 200

The start-up set offers everything for fast realization of the application. It includes:

- MSI*safesoft* configuration software
- USB cable for connecting the Safety Controller to a PC (not included in delivery)
- Quick Start Guide for a quick introduction to the topic: First Steps.

MSI*safesoft* configuration software for simple device configuration

The MSI*safesoft* configuration software helps the user avoid systematic errors. The software supports the user with certified function modules, automatic logic testing, practical wiring inspection and extensive simulation.

With the software, users easily configure the functions of MSI modules through drag & drop functionality.

1. Select and configure safety functions.
2. Connect inputs and outputs of the module to the safety functions.
3. Test the safety functions and save–finished.

The integrated simulation mode and automatic logic testing provide safety even during creation. Configured with the click of a mouse, the device simultaneously reduces wiring and minimizes sources of error. Thanks to the simple configuration, new protective devices can be integrated quickly and safely at any time.

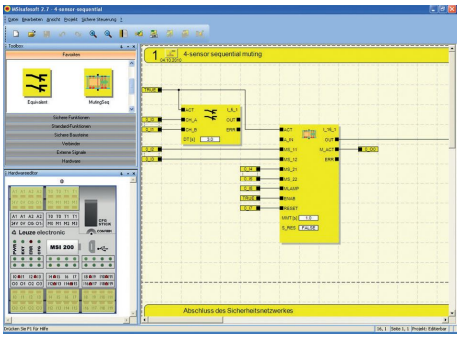

MSI 100 p. 468 | MSI 200 p. 476 | MSI-EM p. 484 | MSI-FB p. 486

PROGRAMMABLE SAFETY CONTROLLERS

MSI 200 Safety Controller, expandable

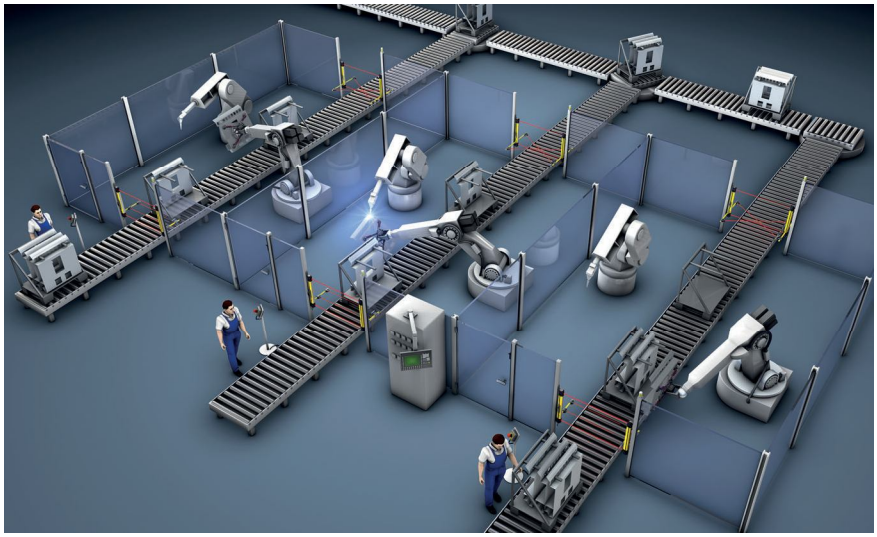

Programmable Safety Controllers, such as the modularly expandable MSI 200 *base module, control a range of safety components within complex, automatic production processes thanks to the numerous safe inputs.*

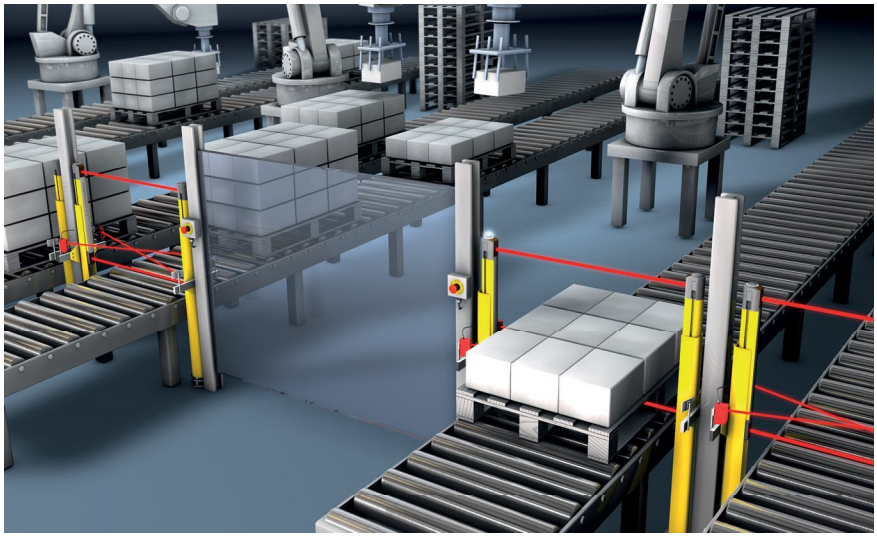

In systems with many safety sensors, the modularly expandable MSI 200 *Safety Controller has advantages, since the number of safe inputs can be significantly increased with additional* MSI-EM *extension modules.*

In automated systems, sensors and actuators must interact with one another functionally and safely. The necessary coordination is performed by the MSI 200 programmable Safety Controller. Unlike the MSI 100 controller, the MSI 200 facilitates the coupling of extension modules (safe I/O modules are available as accessories).

Typical areas of application

- Robot cells
- Automatic processing centers
- Packaging machinery
- Tool manufacturing

MSI 100
p. 468

MSI 200
p. 476

MSI-EM
p. 484

MSI-FB
p. 486

Important technical data, overview

SIL in accordance with IEC 61508 and SILCL in accordance with EN IEC 62061	3
Performance Level (PL) in accordance with EN ISO 13849-1	e
Category in accordance with EN ISO 13849	4
Supply voltage	24 V DC
Reaction time	<30 ms
Ambient temperature, operation	-20... +55°C
Protection rating	IP 20
Dimensions (W x H x D)	67.5 mm x 114.5 mm x 112 mm
Connection system	Plug in screw terminals, spring-cage terminals
Number of safe inputs	20 (up to SIL 3 / EN IEC 62061)
Safety-related switching outputs (OSSDs)	4 (cat. 4 / EN 13849-1 / EN 954)
Interfaces	USB, TBUS DIN rails for extension modules and bus couplers

Functions

Freely configurable safety base module
Monitoring of all safe functions in machines and systems
Safety-oriented expandability with additional input/output modules
Transfers diagnostic data via MSI-FB fieldbus module (option)

Special features

- **20 safe inputs, 4 safe switching outputs (OSSDs)**
- **Extension modules with additional input/output modules available for MSI 200**
- **4 message outputs, 2 clock switching outputs, 2 ground-switching outputs**
- **Free configuration with MSI*safesoft* software**
- **Extensive device library with certified function blocks**
- **Data stick with configuration storage**
- **Designs with screw terminals as well as with spring-cage terminals**
- **Start-up set for quickly getting up to speed**

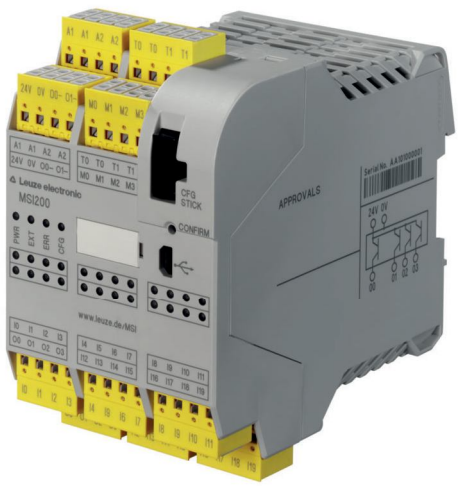

Features

Further information

PROGRAMMABLE SAFETY CONTROLLERS

Ordering information

MSI 200
Included in delivery: connecting and operating instructions, 1 terminal set, 1 data memory module, 2 TBUS Safety connection plugs. Start-up set can be ordered separately.

Functions: Freely configurable safety base module, monitoring of all safety-oriented functions in machines and systems, safety-oriented expandability with additional input/output modules

Art. no.	Article	Description	Safe inputs / safety-related switching outputs (OSSDs)
MSI 200			
547803	MSI201	Programmable MSI Safety Controller, expandable, screw terminal	20 safe inputs, 4 transistor outputs
547813	MSI202	Programmable MSI Safety Controller, expandable, spring-cage terminal	20 safe inputs, 4 transistor outputs

Electrical connection, MSI 200 connection example

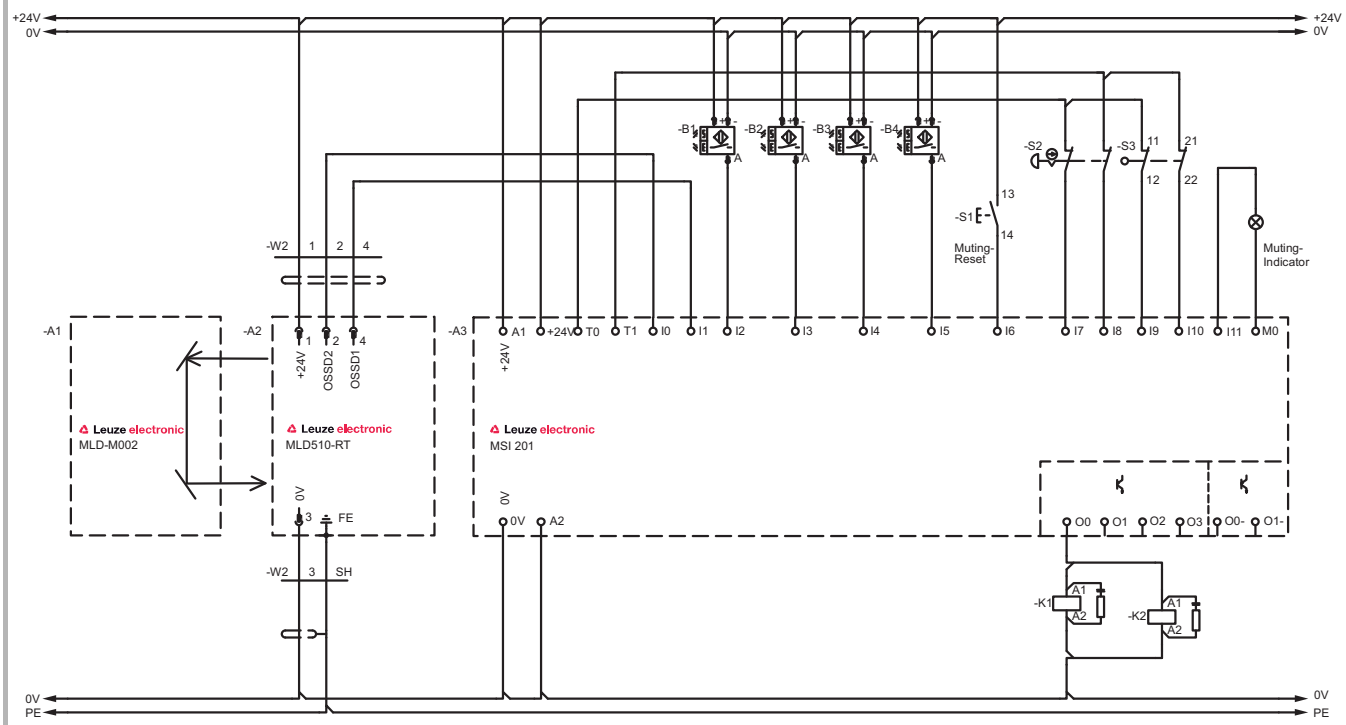

MSI 200 *with E-Stop button and* MLD *Multiple Light Beam Safety Device for 4-sensor sequential muting*

⚠ Please observe the operating instructions of the components!

MSI 100 p. 468 | MSI 200 p. 476 | MSI-EM p. 484 | MSI-FB p. 486

Technical data

General system data		
SIL in accordance with IEC 61508 and SILCL in accordance with EN IEC 62061	3	
Performance Level (PL) in accordance with EN ISO 13849-1	e	
Service life (T_M) in accordance with EN ISO 13849-1	20 years	
Probability of a failure to danger per hour (PFH_d)	1.37×10^{-8}	
Category in accordance with EN ISO 13849	4	
Mean time to dangerous failure ($MTTF_d$) in accordance with EN ISO 13849-1	8324 years	
Supply voltage	24 V DC	
Current consumption	Approx. 200 mA without external load	
Maximum reaction time	<30 ms	
Restart recovery time	<5 ms	
Readiness delay	4 s	
Protection rating	Housing	IP 20
	Connection terminals	IP 20
Ambient temperature, operation	-20... +55°C	
Ambient temperature, storage	-20... +70°C	
Dimensions (W x H x D)	67.5 mm x 114.5 mm x 112 mm	
Conductor cross-section	Screw connection	0.2...2.5 mm²
	Spring-cage connection	0.2...1.5 mm²
Housing material	Unreinforced polyamide PA	
Mounting	On 35 mm DIN rail	
Number of possible safe extension modules	10	
Connection system	Pluggable spring-cage terminals	
Interfaces	USB, TBUS DIN rails for extension modules and bus couplers	
Input data logic		
Nominal input voltage U_N	24 V DC, -15 % to +10 %	
Typ. current consumption at U_N	200 mA	
Inputs		
Number of safe inputs	20 (up to SIL 3 / EN IEC 62061)	
Nominal voltage U_N	24 V DC (to ground A2)	
Typ. current consumption at U_N	4 mA	

Technical data

Outputs	
Safety-related switching outputs (OSSDs)	4 (cat. 4 / EN 13849-1 / EN 954)
Ground-switching outputs	2
Nominal voltage	24 V DC, -15 % to +10 %
Limiting continuous current for devices at A1 and A2 terminals (wired-through current paths A1/A1 and A2/A2)	6 A
Limiting continuous current via TBUS (when supplying external modules via TBUS)	4 A
Clock outputs	2, limiting continuous current 100 mA at 24 V DC
Signal outputs	4, limiting continuous current 100 mA at 24 V DC

Please note the additional information in the connecting and operating instructions and at www.leuze.com/controller/.

Dimensional drawings

MSI 200 programmable Safety Controller

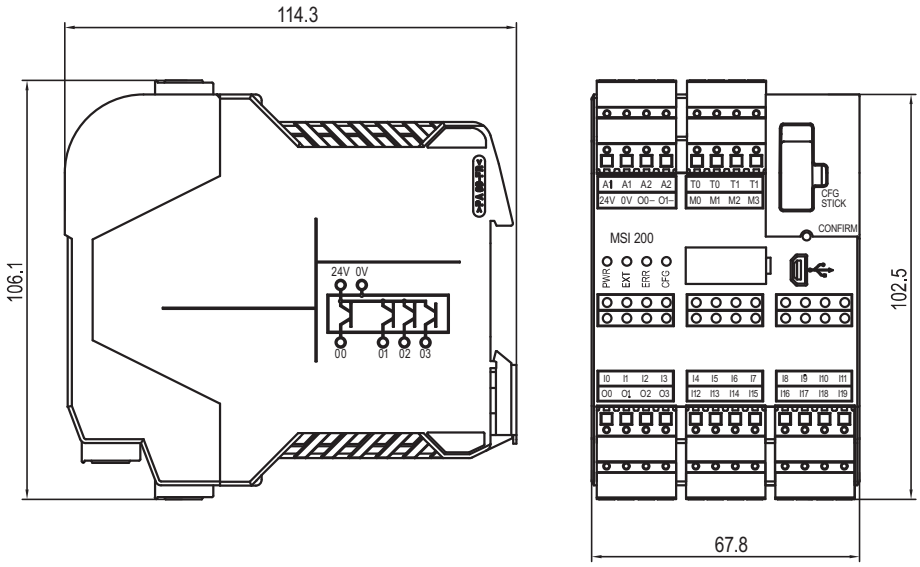

Dimensions in mm

Our 3D CAD models can be found at: www.leuze.com/3d-cad-models.

PROGRAMMABLE SAFETY CONTROLLERS

Accessories ordering information

Art. no.	Article	Description
547820	AC-MSI-CFG1	10x plug-in data memory module
547821	AC-MSI-TCS	10x MSI TBUS safety connection plug
547822	AC-MSI-USB	MSI USB cable MSI-PC, 2 m
547823	AC-MSI-TC	10x MSI TBUS standard connection plug (for fieldbus gateways)
547825	MSI-SWC1	MSI start-up set (includes: CD with MSI*safesoft*, USB cable, Quick Start Guide)
MSI-EM		
547804	MSI-EM201-8I4IO	Digital extension module, screw terminal
547814	MSI-EM202-8I4IO	Digital extension module, spring-cage terminal
MSI-FB		
547806	MSI-FB-PB101	PROFIBUS module, screw terminal

Start-up set

See start-up set for MSI 100, MSI 200, page 474

Configuration software

See MSI*safesoft* configuration software for simple device configuration, page 474

PROGRAMMABLE SAFETY CONTROLLERS

MSI-EM extension modules (I/O extension)

Dimensional drawings

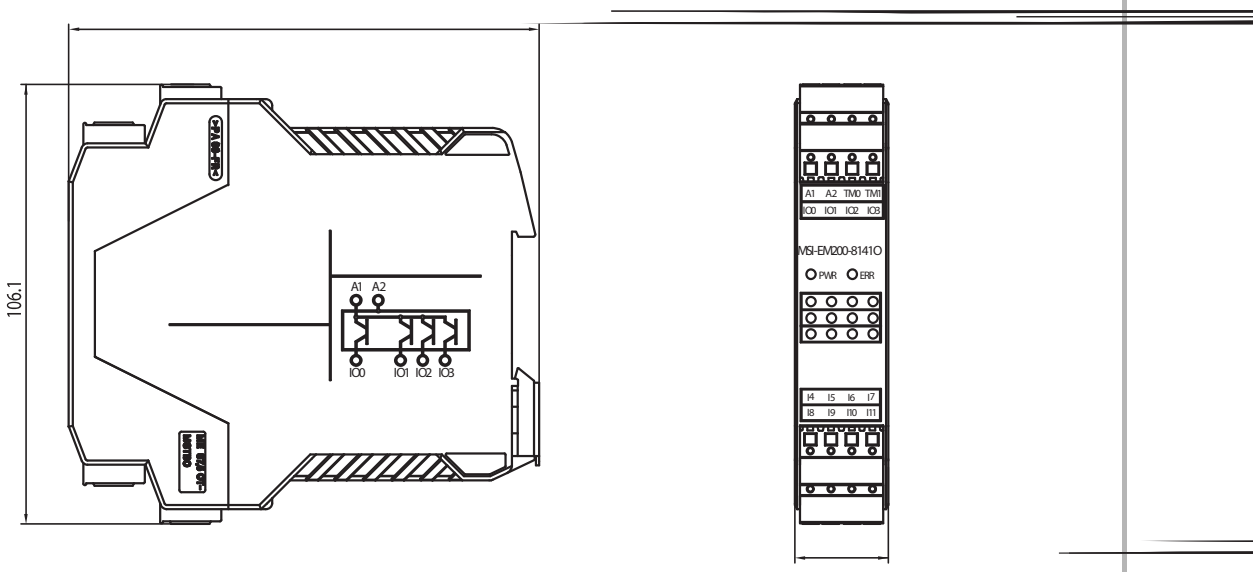

Dimensions in mm

Ordering information

MSI-EM
Included in delivery: 1 TBUS safety connection plug.

Functions: Extension module for the MSI 200 programmable Safety Controller, extension with 8 safe inputs and 4 safe, freely configurable channels-either safe inputs or outputs (OSSDs)

Art. no.	Article	Description
547804	MSI-EM201-8I4IO	Digital extension module, screw terminal
547814	MSI-EM202-8I4IO	Digital extension module, spring-cage terminal

MSI 100 p. 468 | MSI 200 p. 476 | MSI-EM p. 484 | MSI-FB p. 486

Important technical data, overview

Category in accordance with EN ISO 13849	4
Dimensions (W x H x D)	22.5 mm x 114.5 mm x 99 mm
Connection system	Plug in screw terminals, spring-cage terminals
Number of safe inputs	12, 4 of which are configurable as input or output
Safety-related switching outputs (OSSDs)	4 if using the configurable inputs/outputs as outputs
Interfaces	TBUS DIN rails for extension modules and bus coupler

Please note the additional information in the connecting and operating instructions at www.leuze.com/controller/.

Functions

Extension module for the MSI 200 programmable Safety Controller

Extension with 8 safe inputs and 4 safe, freely configurable channels-either as safe inputs or outputs (OSSDs)

Special features

- **Simple connection via DIN rail connector**
- **Designs with screw terminals as well as with spring-cage terminals**
- **Compact housing width 22 mm**
- **4 freely configurable safety outputs (OSSDs)**

Features

Further information

PROGRAMMABLE SAFETY CONTROLLERS

MSI-FB-PB fieldbus modules (Profibus)

Dimensional drawings

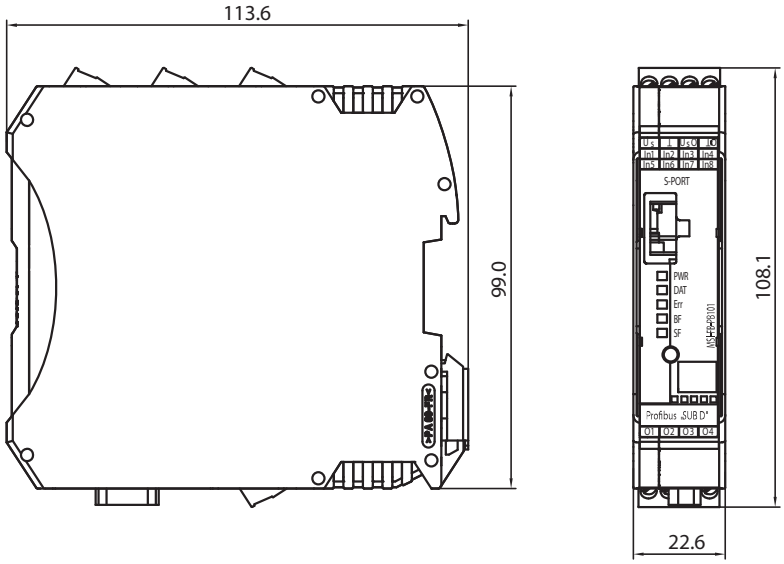

Dimensions in mm

Ordering information

MSI-FB
Included in delivery: 1 TBUS safety connection plug.

Functions: Fieldbus module for the MSI 100 and MSI 200 programmable Safety Controllers for connecting to PROFIBUS

Art. no.	Article	Description
547806	MSI-FB-PB101	PROFIBUS module, screw terminal

MSI 100
p. 468

MSI 200
p. 476

MSI-EM
p. 484

MSI-FB
p. 486

Important technical data, overview

Supply voltage	24 V DC
Protection rating	IP 20
Dimensions (W x H x D)	22.5 mm x 114.5 mm x 99 mm
Connection system	Plug-in screw terminals
Number of inputs	4
Number of switching outputs	4
Interface 1	IFS interface, TBUS
Interface 2	PROFIBUS-DP, D-SUB-9

Please note the additional information in the connecting and operating instructions at www.leuze.com/controller/.

Functions

Fieldbus module for connecting the MSI 100 and MSI 200 programmable Safety Controllers to PROFIBUS

Special features

- **Certified in accordance with DPV1 specification (EN 50170)**
- **Simple connection via DIN rail connector**
- **Compact housing width 22 mm**

Features

Further information