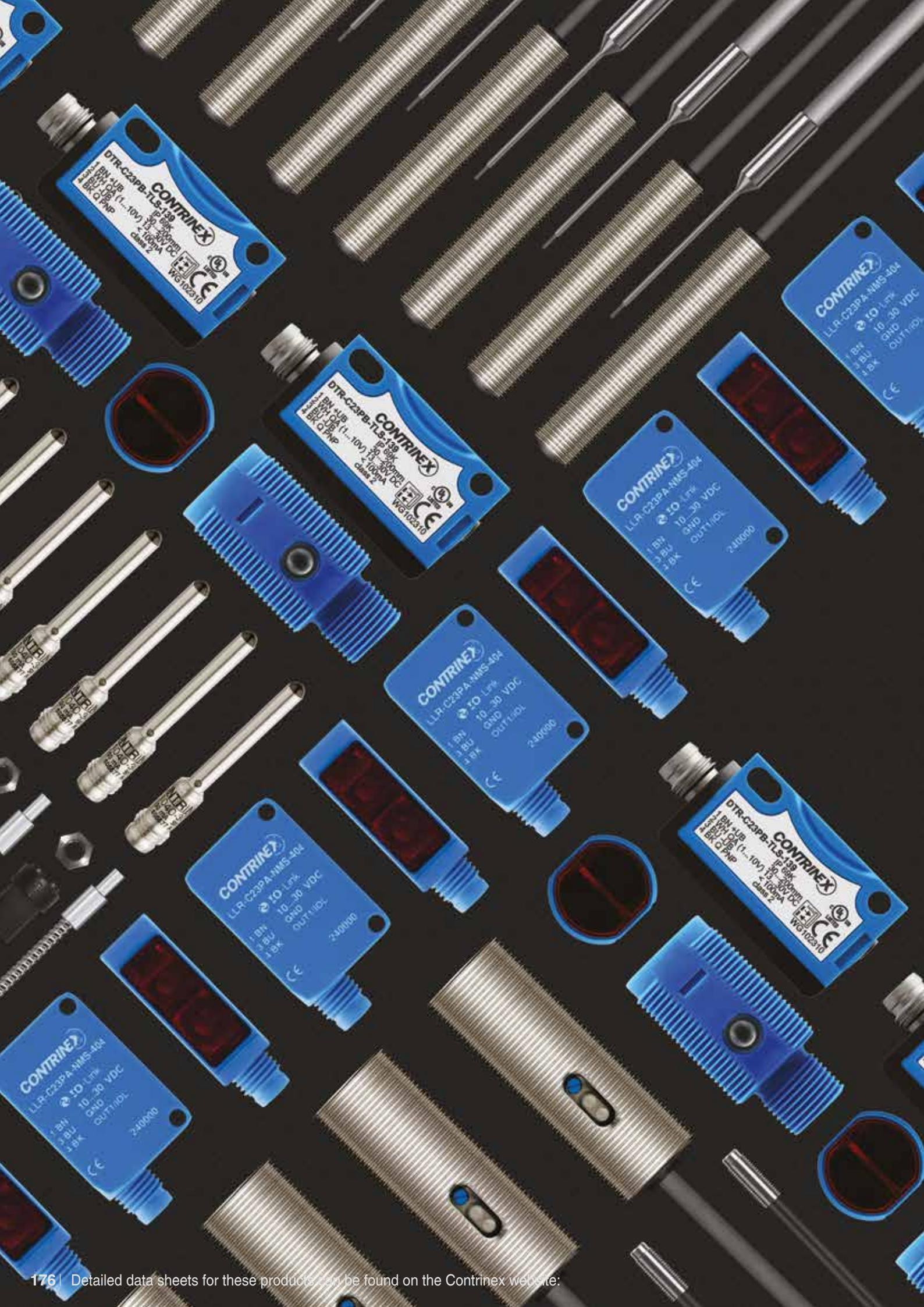
CONTRINEX
DTR-C23PB-TLS-139
CONTRINEX
LLR-C23PA-NMS-404

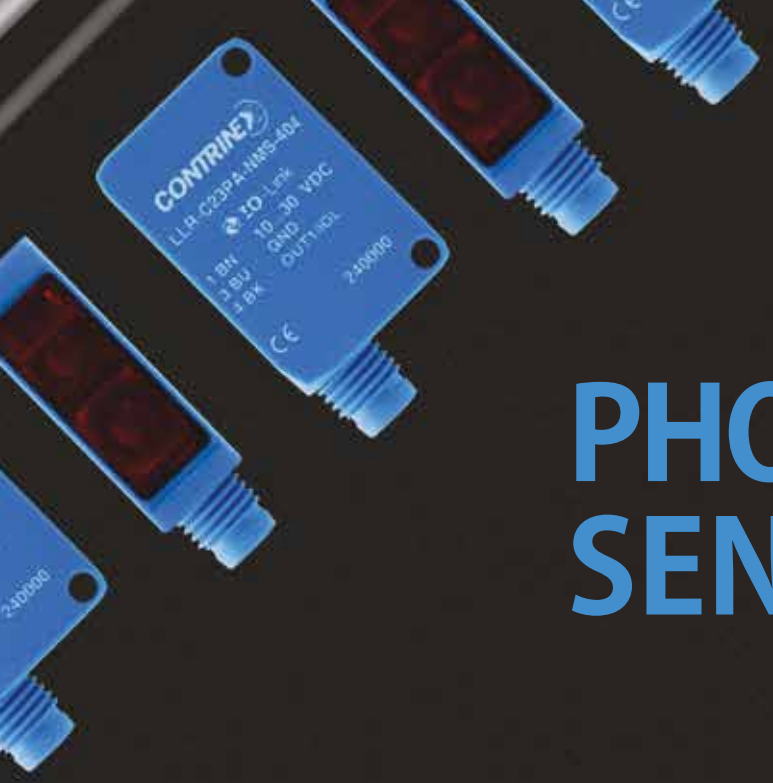

PHOTOELECTRIC SENSORS

HIGHLIGHTS:

- ✓ Complete C23 series with first-class sensing ranges
- ✓ Excellent background suppression sensors
- ✓ Smallest self-contained miniature sensors on the market
- ✓ Wide range of fiber-optic amplifiers, including IO-Link
- ✓ Excellent color and contrast recognition sensors

NEW:

- ✓ C23 sensors with patented UV technology for transparent object detection, including IO-Link
- ✓ M18 series with short plastic housing and IO-Link
- ✓ Distance measurement sensors in C23 and C55 size with IO-Link
- ✓ Detection and measurement light grids

PROGRAM OVERVIEW

		SERIES	1040	1050	1120	M18P	1180
		HOUSING SIZE IN MM	∅ 4 IO-Link 2019	M5 IO-Link 2019	M12 IO-Link 2019	M18 IO-Link	M18 IO-Link 2019
	OPERATING PRINCIPLE	SENSING RANGE	CYLINDRICAL				
STANDARD	Diffuse	0 ... 1500 mm			p.191	p.196	p.200 201, 205
	Background suppression	2 ... 5000 mm				p.195	p.199-200
	Reflex	0 ... 8000 mm			p.192	p.197	p.202-203
	Through-beam	0 ... 50,000 mm			p.192-193	p.197	p.203 204, 206
MINIATURE	Diffuse	0 ... 90 mm	p.229-231	p.232-234			
	Background suppression	2 ... 120 mm					
	Reflex	0 ... 3000 mm					
	Through-beam	0 ... 2000 mm	p.231	p.235			
TRANSPARENT OBJECT	Reflex, UV light	0 ... 1200 mm					
	Reflex, red light	10 ... 5000 mm					
FIBER OPTIC SENSORS AND FIBERS	Amplifier	0 ... 200 mm					
	Plastic fiber	0 ... 1800 mm					
	Glass fiber	0 ... 1500 mm					
DISTANCE	Short range	20 ... 200 mm					
	Medium range	60 ... 5000 mm					
COLOR AND CONTRAST	Color	30 ... 40 mm					
	Contrast	12 mm					
LIGHT GRIDS	Detection	80 ... 8000 mm					
	Measurement	300 ... 4000 mm					

	0507	C12	C23	3030	3060	4040	4050	C55	DGI	MGI
	5x7x40	13x21x7 13x27x7	20x30x10 20x34x12 IO-Link	30x30x15	31x60x10 IO-Link	40x40x19	40x50x15 IO-Link	50x50x23 IO-Link	40x20xH	40x20xH
	CUBIC									
			p.210	p.215-216			p.221			
			p.209	p.213-214			p.221	p.225		
			p.211	p.217-218			p.222			
			p.211	p.219			p.222			
	p.237									
		p.239-240								
		p.240								
		p.241								
			p.245							
			p.246-247							
				p.253-254	p.257-259	p.261				
				p.262-271	p.262-271					
				p.277		p.272-276				
			p.283							
								p.285		
							p.289			
							p.289			
									p.293	
										p.295

PROGRAM OVERVIEW

HOUSING SIZE	SENSING RANGE	PAGE
	1 mm / 10 mm / 100 mm / 1000 mm / 10,000 mm / 100,000 mm	
DIFFUSE		
∅ 4 mm / M5	10 mm	229, 232
∅ 4 mm / M5	20 mm	230, 233
∅ 4 mm / M5	50 mm	231, 234
5 x 7 mm	20 mm	237
5 x 7 mm	50 mm	237
5 x 7 mm	90 mm	237
M12	300 mm	191
M18P	1200 mm	196
M18 (M18W)	600 mm	200-201
M18 ⚠	250 mm	205
M18 ⚠	600 mm	205
C23	1500 mm	210
30 x 30 mm	600 mm	215
30 x 30 mm	1200 mm	216
40 x 50 mm	1200 mm	221
BACKGROUND SUPPRESSION		
M18P	250 mm	195
M18 (M18W)	120 mm	199-200
C12	15 mm	239
C12	30 mm	240
C12	120 mm	239
C23	300 mm	209
30 X 30 mm	200 mm	213-214
40 X 50 mm	500 mm	221
C55 ⚠	5000 mm	225
REFLEX		
M12	1500 mm	192
M18P	7000 mm	197
M18 (M18W)	2000 mm	202-203
C12	3000 mm	240
C23	8000 mm	211
C23 (TRU)	1200 mm	245
C23 (TRR)	5000 mm	246-247
30 X 30 mm	2000 mm	217
30 X 30 mm	4000 mm	218
40 X 50 mm	4000 mm	222
ANALOG OUTPUT		
30 x 30 mm	100 mm	213

HOUSING SIZE	SENSING RANGE	PAGE
	1 mm / 10 mm / 100 mm / 1000 mm / 10,000 mm / 100,000 mm	
THROUGH-BEAM		
∅ 4 mm	250 mm	231
M5	250 mm	235
M12	10,000 mm	192
M12 ✳	50,000 mm	193
M18P	30,000 mm	197
M18 (M18W)	20,000 mm	203-204
M18 ✳	50,000 mm	206
C12	2000 mm	241
C23	30,000 mm	211
30 x 30 mm	6000 mm	219
30 x 30 mm	12,000 mm	219
40 x 50 mm	50,000 mm	222
FIBER-OPTIC AMPLIFIER		
30 x 30 mm	60 mm	253
30 x 30 mm	120 mm	254
31 x 60 mm	100 mm	259
31 x 60 mm	200 mm	257-258
40 x 40 mm	150 mm	261
CONTRAST		
40 x 50 mm	12 mm	289
COLOR		
40 x 50 mm	40 mm	289
DISTANCE MEASURING		
C23	80 mm	283
C23 ✳	100 mm	283
C23	200 mm	283
C55 ✳	5000 mm	285
LIGHT GRIDS		
40 x 20.5 mm (Detection grid)	8000 mm	293
40 x 20.5 mm (Measurement grid)	4000 mm	295

OPERATING PRINCIPLE

The light-emitting diode (LED) emits a beam of modulated light towards the target. This beam is interrupted by the target, causing partial reflection. A part of the reflected light reaches the sensing face of the receiver. Depending on the operating principle, either the interrupted beam or the reflected light is used for further processing.

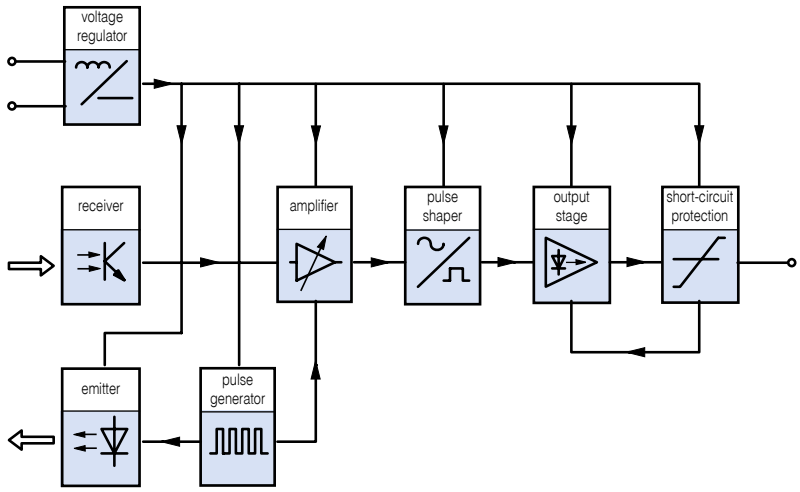

Fig. 9: Functional blocks of a photoelectric sensor

TECHNOLOGY FAMILIES

Contrinex photoelectric devices are divided into five **technology families**, depending on their operating principle. The program includes energetic **diffuse** sensors, diffuse sensors with **background suppression**, **reflex** sensors, **through-beam** sensors and sensors with **analog** output.

DIFFUSE

Versatile and cost-effective

A diffuse-mode, or energetic-diffuse, photoelectric sensor is a reflective sensor, containing a transmitter and a receiver in a single housing. The sensor emits a light beam toward a distant target that acts as a reflector, returning part of the transmitted light to the sensor. The receiver detects the amount of light reflected by the target, triggering the sensor when the light intensity reaches a threshold value.

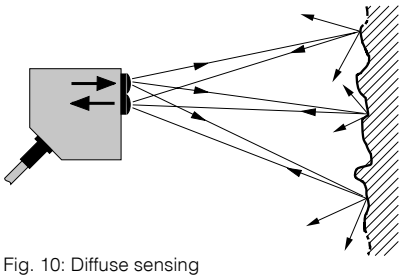

Fig. 10: Diffuse sensing

Diffuse-mode sensors are cost-effective as they do not require separate reflectors or receivers, and detect reflective targets with ease. Sensing range depends on the target's size, shape, color and surface finish, although sensor sensitivity is adjustable during installation to compensate for targets with poor reflective qualities.

BACKGROUND SUPPRESSION

Excellent suppression of light-colored backgrounds

Diffuse-mode photoelectric sensors with background suppression emit a focused light beam toward a distant target. Part of the beam is reflected from the target and returns to the sensor, striking a position-sensitive receiver. The receiver distinguishes between reflections from the target and reflections from background objects, only triggering the sensor when the signal reaches a value that relates to the preset target distance.

The sensing range is practically insensitive to the target's size, color, shape and surface finish, and background-suppression sensors provide highly reliable detection of "difficult" targets, even against a light background. Stable, accurate detection of small, fast-moving parts on conveyors or automated machinery is possible over the entire sensing range, eliminating false triggering by objects in the background.

REFLEX

Long sensing range in a single-housing device

A reflex, or reflective, photoelectric sensor contains a transmitter and a receiver in a single housing, and emits a pulsed, focused light beam toward a distant reflector. Reflected light returns to the sensor, arriving at the receiver. When a target object interrupts the light beam, the receiver detects the reduced light intensity and triggers the sensor.

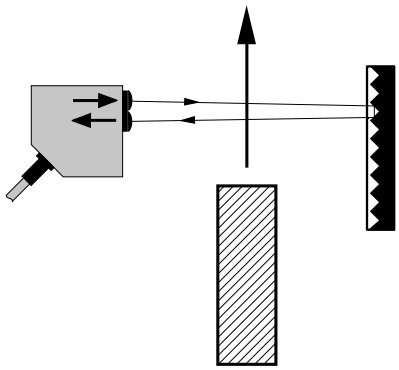

Fig. 11: Reflex sensing

The relatively high level of reflected light allows reflex sensors to achieve sensing distances up to eight meters. For applications where the target object itself reflects light back toward the sensor, models with polarization filters are available. The filters ensure that only light returned from the reflector reaches the receiver, ensuring reliable detection, even with reflective targets.

THROUGH-BEAM

Emitter and receiver in separate housings for sensing ranges from 0 to 50 m

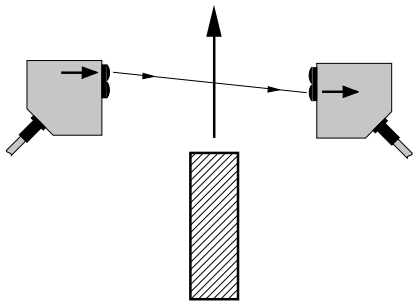

Fig. 12: Through-beam sensing

A through-beam photoelectric sensor comprises an emitter and receiver, each mounted in a separate housing. The emitter is aligned so that the greatest possible amount of pulsed light from its emitting diode reaches the receiver (Fig. 12). The receiver, which is mounted beyond the target area, processes incoming light in such a way that it is clearly separated from ambient and other light sources. Any interruption of the light beam by a target triggers the sensor, causing its output signal to switch. For reliable operation, the target must be completely opaque, and its size should be at least equal to the diameter of the receiver's aperture.

Contrinex through-beam photoelectric sensors are ideal for industrial applications where sensing components must be mounted some distance from the target area. Through-beam sensors utilize infrared, visible and laser light sources to detect opaque and semi-transparent targets, reliably and repeatably, at extended distances. They are available in cylindrical versions from subminiature (Ø 4) to small (M18) and cubic versions from miniature (20 mm x 30 mm x 10 mm) to small (40 mm x 50 mm x 15 mm).

ANALOG OUTPUT

Precise distance control

Photoelectric sensors with analog outputs are ideal for measuring absolute values of distance. Using background suppression-mode technology, analog photoelectric sensors produce an output signal that is accurately calibrated and approximately proportional to the distance of the target from the sensor. Users have a choice of current or voltage outputs that are compatible with all modern control systems.

Contrinex analog photoelectric sensors provide all the advantages of standard diffuse-mode sensors, and measure target distances up to 100 mm.

PRODUCT RANGES

STANDARD

First-class performance for general use

Contrinex **Standard** photoelectric sensors are ideal for general position- and presence-detection in almost any industry. With first-class sensing ranges and outstanding background suppression characteristics, the Standard range of sensors delivers very high accuracy and reliability. Light sources include infrared, laser and pinpoint LED.

The **Standard** range offers a wide choice of cubic sizes: **C23** (20 x 30 x 10 mm), **3030** (30 x 30 x 15 mm), **4050** (40 x 50 x 15 mm) and **C55** (50 x 50 x 23 mm). Cylindrical types are available in sizes **M12** and **M18**, including some M18 types with housings adapted for right-angle detection.

Standard C23 and **M18P** series are high quality ASIC sensors with an integral **IO-Link** interface in PNP types. This makes them particularly suitable for smart factory applications. IO-Link extends sensor functionality to include continuous monitoring of process data, continuous diagnosis of sensor status, advanced parameter settings, sensitivity adjustment, a remote teach function and easy checking of sensor ID, to ensure the right sensor is at the right place. See page 186.

MINIATURE

Smallest on the market

The Contrinex **Miniature** range packs exceptional position- and presence-sensing performance into the smallest self-contained photoelectric sensors on the market. Designers have the choice of through-beam or diffuse sensors in **Ø4** and **M5** cylindrical metal housings that offer multiple mounting methods and beam orientation. For fully embedded applications, sensors with spherical sapphire-glass lenses produce focused, cylindrical light beams.

Types with a **5 mm x 7 mm** stainless-steel housing and a narrowly focused, cylindrical light beam are suitable for vertical or horizontal mounting directly on the supporting surface. Best-in-class sensing distances of up to 90 mm allow them to be positioned at a safe distance from the target.

The **C12** Series (13.5 mm x 21.8 mm x 7.7 mm) with small visible light spot thanks to red pinpoint LED offers long sensing ranges up to 2000 mm in a through-beam type and 3000 mm in a polarized reflex type. Two background suppression types are available with fixed sensing ranges up to 15 mm or 30 mm. A third type with 3-turn potentiometer (13.5 mm x 27.5 mm x 7.7 mm) reliably detects objects up to 120 mm.

TRANSPARENT OBJECT

Outstanding reliability and ease of adjustment

The Contrinex **TRU-C23** photoelectric sensor is ideally suited for the presence control of transparent objects. Its patented technology uses **UV light**. Since transparent materials like plastic or glass absorb large amounts of polarized UV light, it is very easy to set the threshold at which the sensor switches. The shape or thickness of the target has no influence on detection. In addition, sensor performance is unaffected by dirt, water drops or aging.

The sensor system comprises an LED that emits polarized UV light and a UV reflector. Overall, the sensor's operating range is around **1200 mm**. Special optics with autocollimation ensure reliable detection and no blind zone, even close to the sensor or through a small notch.
For applications requiring the detection of thicker or larger transparent objects, the **C23 Transparent Standard** can be the ideal solution. It operates with polarized, red light and has a maximum operating range up to **5000 mm**. Typical fields of application can be found in the food, pharmaceutical and packaging industries. Both sensor types include an IO-Link interface (see page 186).

FIBER-OPTIC SENSORS AND FIBERS

Reliable short and long-range sensing

The highly versatile **Fiber-Optic** range includes the self-contained **3030** and **4040** series (30 mm x 30 mm x 15 mm and 40 mm x 40 mm x 19 mm) and the DIN-rail mounted **3060** series (31 mm x 60 mm x 10 mm), suitable for multiple-sensor applications. **Synthetic fibers** are available for general use and **glass fibers** for high temperatures and aggressive environments.

Customers requiring intrinsically safe photoelectric sensors with DIN-rail-mounted electronics need not look beyond the Contrinex **3060** series of fiber-optic amplifiers. In a Crastin® housing, every model combines ease of set-up with market-leading features, including **IO-Link** (see page 186). With switching times as low as 0.1 millisecond, 3060 fiber-optic amplifiers are ideal for sensing fast-moving targets in demanding environments, including robotics, precision handling systems and printed circuit board production.

Distance setting is accomplished either by adjustment of a multi-turn potentiometer or by use of a teach-in function with manual fine adjustment. An optional digital display (model 3066) is also available. Using blue-light sources (model 3360), detecting glass is possible at distances up to 100 mm.
Fiber-optic sensors are common in explosive environments or in the presence of strong electromagnetic fields, but also in confined spaces. With bend-radii as small as 2 mm, reliable, accurate sensing is possible even in the most inaccessible areas.

DISTANCE

High precision and direct digital transmission

DTR-C23 and **DTL-C23** sensors use a triangulation method for highly accurate distance measurement at short range. Types with red light (DTR-C23) measure distances of **20 to 80 mm** or **30 to 200 mm**, while the measurement range for laser types (DTL-C23) is **20 to 100 mm**. Applications include small-part detection, position or height checking and monitoring material thickness on winding rolls.

For ranges up to **5000 mm**, **DTL-C55** sensors use the optical time-of-flight (TOF) method. In the **IO-Link** version, measurements are passed directly to the control system as millimeter values in digital form, with no need for an analog-to-digital converter and no signal drop for long lines. In addition, IO-Link provides diagnostic and other functions (see page 186). With two virtual switching points settable either via teach-in or direct parameter write-in, this sensor is ideal for use in mobile logistics, such as forklift trucks.

With both methods, distance measurement is largely independent of target color or surface characteristics. Detected distances can be output via an adjustable analog output and, for a digital output, a switching window of acceptance may be configured by teach-in.

The housings of **DTR-C23** and **DTL-C23** sensors (20 mm x 34 mm x 12 mm) and **DTL-C55** sensors (50 mm x 50 mm x 23 mm) have an **IP67/IP69K** enclosure rating. DTL-C55 sensors have **Ecolab** certification.

COLOR AND CONTRAST

Excellent resolution for smallest variations

Color photoelectric sensors utilize energetic-diffuse sensing technology to detect variations in target color, allowing color sorting or color control. A “teach-in” function is used to program up to three separate outputs. Contrinex color photoelectric sensors also feature five selectable tolerance levels for each output, enabling the sensor to recognize or ignore even the smallest variations of color.

Contrast sensors are ideal for detecting print marks in printing, labelling and packaging processes. Using a narrowly focused light beam and RGB emission technology, contrast sensors automatically select the best emission color (red, green or blue) during the teach-in procedure. Excellent contrast resolution, a high switching frequency (up to 10 kHz) and five tolerance levels ensure accurate detection and positioning, even when contrast differences are minimal. The integral **IO-Link** interface may be used to reduce changeover times through remote teach-in and parameterization. Other control functions, including monitoring, diagnosis and switching timer adjustment are also available (see page 289).

Contrinex color and contrast sensors have a rugged PBTP housing (40 mm x 50 mm x 15 mm) with **IP67** enclosure rating and are available in cable or adjustable (0°, 45° or 90°) connector versions.

LIGHT GRIDS

Fast detection, counting and measurement

The use of infrared **light grids** for non-contact measurement offers many advantages, including fast response times, reliable detection of the most varied objects and immunity to interference from ambient light. Potential applications for these keen-eyed, robust sensors are to be found in such fields of application as logistics or automated packaging systems and in harsh environments such as warehouses and the wood industry.

With the **DGI** (detection) and **MGI** (measurement) series, Contrinex presents compact infrared light grids as a robust plug-and-play solution. With a cross-section of only 40 x 20.5 mm, these space-saving devices are easily integrated into different systems. DGI types offer detection heights up to 2010 mm and are capable of detecting objects with diameters of 0.9, 2, 4, 8 or 25 mm, depending on type. With response times between 0.8 and 4.8 ms, even small objects moving at high speed can be reliably detected and counted. Fields of application include the production of small parts or foil, packaging equipment and the pharmaceutical industry. In addition to detecting the presence of an object, MGI measurement types can also determine its dimensions and position. These sensors offer measurement heights up to 1438 mm and a resolution of 5 or 12 mm. Measurements are output as analog values of 0-10 V or as a 4-20 mA signal.

IO-LINK FUNCTIONALITY* WITH PHOTOELECTRIC SENSORS (PNP TYPES)

Data monitoring:

1 Detection status is monitored and continuously transmitted through IO-Link process data. This data contains both the detection state and the stability of detection (sufficient detection margin). It is possible, therefore, to determine whether the sensor is working too close to its detection threshold, for example due to window contamination.

Diagnosis:

2 The operating state of the sensor is checked. In case of wire break, under-voltage, disturbances on the receiver, sensor malfunction or installation of the wrong sensor, information is provided directly through IO-Link to enable fast repair, maintenance and replacement.

Sensitivity and teach:

3 The sensitivity of the sensor can be adjusted remotely by changing the threshold. Alternatively, the teach function can be used to adapt the threshold to the application. Calibrated sensing ranges ensure easy sensor replacement by uploading the existing sensitivity to the replacement sensor.

Light-on/Dark-on selection:

4 The output switching mode can be selected as light-on or dark-on. A single sensor type is configurable for the various needs of an application. This helps reduce the number of different sensor types required in stock.

Switching timer:

5 The timing of output switching can be configured. Depending on the needs of an application, output switching can be delayed or the duration stretched.

Sensor mode:

6 3 different modes are selectable depending on the application needs: “Normal”, “Fast” and “Fine”. “Normal” mode is a good balance of speed and precision. In “Fast” mode, speed is higher and in “Fine” mode precision is higher.

Sequence selection:

7 For cross-talk immunity with through-beam sensors, up to 9 different emitting sequences can be selected to pair the emitter with the receiver.

Detection counter:

8 Detection events are counted. By registering the number of detections, it is possible to calculate the speed or number of parts. The counter can be reset by means of a unique IO-Link message.

Temperature:

9 The internal temperature of the sensor is measured continuously, which provides an indication about the ambient temperature in the application. Moreover, the maximum temperature measured is saved for diagnosis and preventive maintenance purposes.

* Functionalities may vary depending on series and sensor type

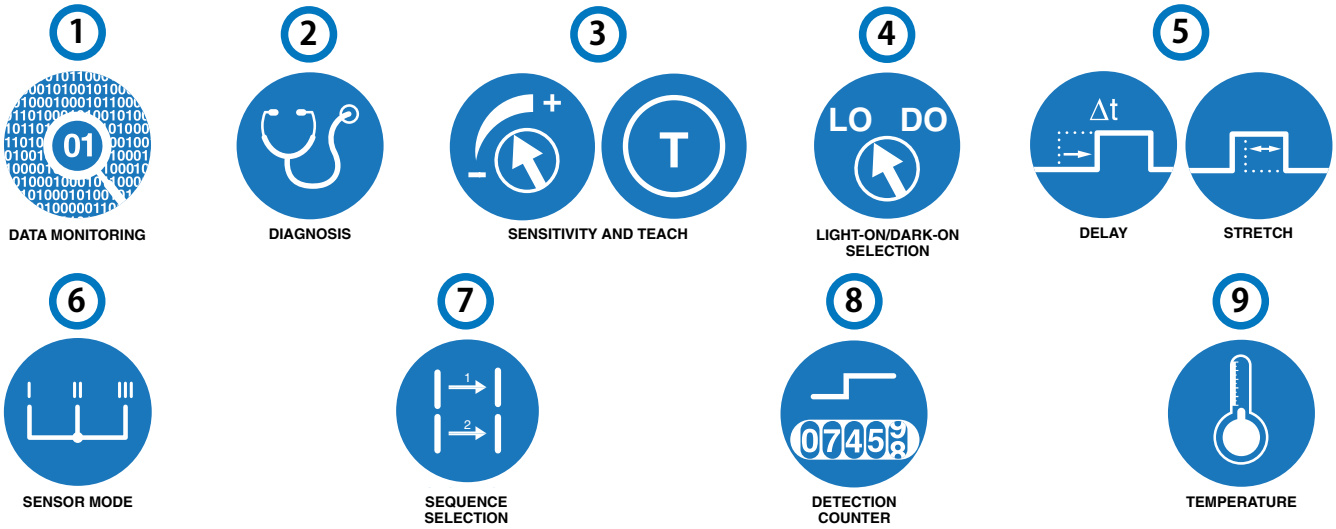


CONTRINEX
DW-AD-703-C23
Sn 7 mm
PNP NO 638718 A
IO-Link
CONTRINEX
DW-AS-612

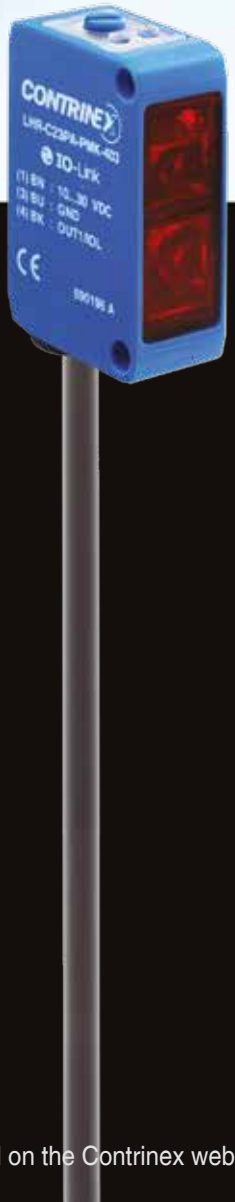
CONTRINEX
IO-Link
CE

STANDARD

PHOTOELECTRIC SENSORS

KEY ADVANTAGES

- ✓ First-class sensing ranges
- ✓ Outstanding background suppression characteristics
- ✓ Cubic sizes: C23 (20 x 30 x 10 mm), 3030 (30 x 30 x 15 mm), 4050 (40 x 50 x 15 mm) and C55 (50 x 50 x 23 mm)
- ✓ Cylindrical M12 and M18 series with metal housing
- ✓ M18P series with short, plastic housing
- ✓ C23 and M18P series: high quality ASIC sensors with an integral IO-Link interface in PNP types
- ✓ Light sources: red, infrared, laser and pinpoint LED

RANGE OVERVIEW	Series	Diffuse	Background suppression	Reflex	Through-beam
STANDARD	1120 (M12)	p. 191		p. 192	p. 192-193
	M18P (M18)	p. 196	p. 195	p. 197	p. 197
	1180 (M18)	p. 200-201, 205	p. 199-200	p. 202-203	p. 203-204, 206
	C23 (20x30x10)	p. 210	p. 209	p. 211	p. 211
	3030 (30x30x15)	p. 215-216	p. 213-214	p. 217-218	p. 219
	4050 (40x50x15)	p. 221	p. 221	p. 222	p. 222
	C55 (50x50x23)		p. 225		

STANDARD 1120

PHOTOELECTRIC SENSORS

ADVANTAGES

- ✓ M12 sensor series
- ✓ Rugged metal housing
- ✓ Shock & vibration resistant due to fully potted electronics
- ✓ Laser types (protection class 2) for accurate detection of smallest targets
- ✓ Sensing range up to 50 m
- ✓ IO-Link in 2019

WIRING DIAGRAM

PNP or NPN, 1 output

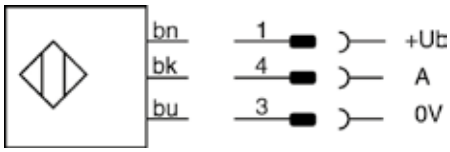

OVERVIEW	1120	1121L
Housing material	Chrome-plated brass	Stainless steel V2A
Degree of protection	IP 67	IP 67
Laser protection class	--	2
Supply voltage range	10...36 VDC	10 ... 36 VDC
Ambient temperature range	-25...+55 °C / -13...+131 °F	-10...+50 °C / +14...+122 °F
Output current	≤ 200 mA	≤ 200 mA
Switching frequency	≤ 1000 Hz	≤ 5000 Hz

1120 SERIES

HOUSING SIZE	M12	M12
OPERATING PRINCIPLE	DIFFUSE SENSOR	DIFFUSE SENSOR
SENSING RANGE MM	300	300

PHOTOELECTRIC

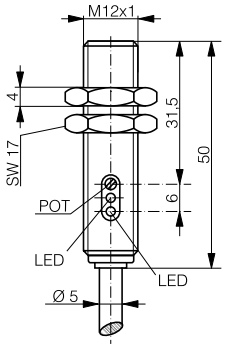

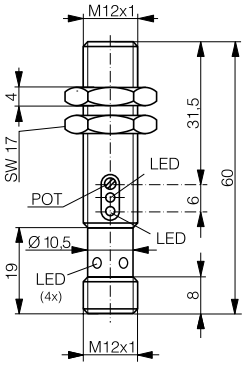

DATA	IO-Link 2019	IO-Link 2019
Light source	LED red 660 nm	LED red 660 nm
Setup	Potentiometer	Potentiometer
PNP Light-ON	**LTK-1120-303**	
NPN Light-ON	**LTK-1120-301**	**LTS-1120-301**
Other types available		

STANDARD

PHOTOELECTRIC

HOUSING SIZE	M12	M12
OPERATING PRINCIPLE	REFLEX SENSOR	THROUGH-BEAM SENSOR
SENSING RANGE MM	1500	10,000

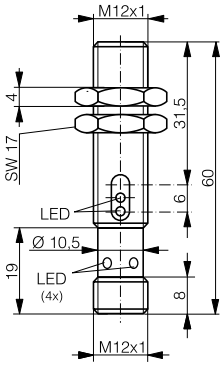

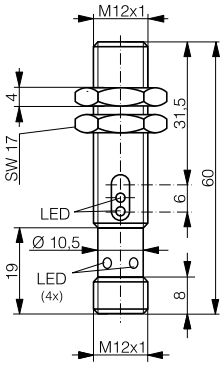

DATA	IO-Link 2019	IO-Link 2019
Light source	LED red polarized 660 nm	LED red 660 nm
Setup	-	-
Emitter		**LLS-1120-200 (emitter)**
PNP Dark-ON	**LRS-1120-304**	**LLS-1120-204 (receiver)**
NPN Dark-ON	**LRS-1120-302**	**LLS-1120-202 (receiver)**
Other types available	Cable version	Cable version

M12

THROUGH-BEAM SENSOR

50,000

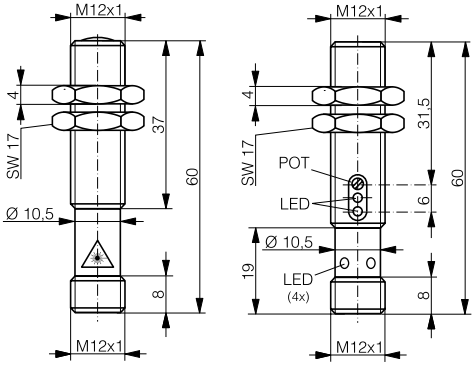

Emitter Receiver

Laser red pulsed 660 nm	
-	
LLS-1121L-200 (emitter)	
LLS-1121L-204 (receiver)	
LLS-1121L-202 (receiver)	
Cable version	

STANDARD
M18 PLASTIC

PHOTOELECTRIC SENSORS

ADVANTAGES

- ✓ First-class sensing ranges
- ✓ Short housing: M18 x 33 mm (cable version), M18 x 37 mm (connector version)
- ✓ Excellent background suppression characteristics with pinpoint LED
- ✓ Mutual interference immunity
- ✓ IO-Link on all PNP sensors
- ✓ Easy flush mounting
- ✓ Easy-to-mount special accessories for right-angle emission

WIRING DIAGRAMS

PNP or NPN, 1 output

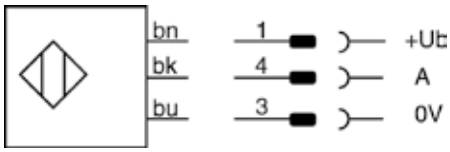

PNP or NPN, 2 outputs

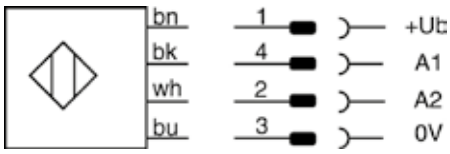

OVERVIEW	M18P
Housing material	ABS / PMMA
Degree of protection	IP 67
Supply voltage range	10 ... 30 VDC
Ambient temperature range	-25 ... +65°C / -13 ... +149°F
Output current	≤ 200 mA
Compatible mounting brackets	See pages 300-301
Accessories	See pages 441-455

M18P SERIES

HOUSING SIZE	M18	M18
OPERATING PRINCIPLE	DIFFUSE SENSOR WITH BACKGROUND SUPPRESSION	DIFFUSE SENSOR WITH BACKGROUND SUPPRESSION
SENSING RANGE MM	250	250

PHOTOELECTRIC

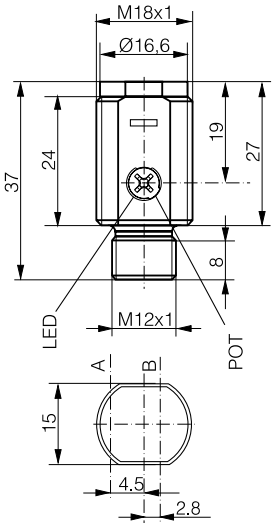

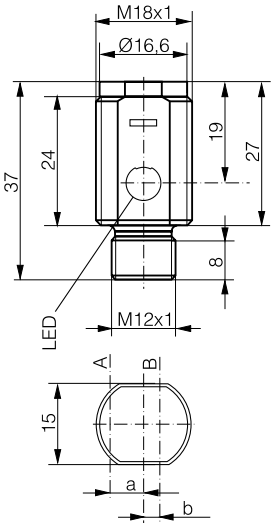

DATA	IO-Link	IO-Link
Light source	LED red pinpoint 640 nm	LED red pinpoint 640 nm
Switching frequency (normal mode)	≤ 700 Hz	≤ 700 Hz
Setup	Potentiometer	Teach button or IO-Link
PNP Light-ON	**LHR-M18PA-PMS-403**	**LHR-M18PA-TMS-403**
PNP Light-ON + Dark-ON	**LHR-M18PA-PMS-603**	**LHR-M18PA-TMS-603**
PNP Light-ON + stability alarm	**LHR-M18PA-PMS-60C**	**LHR-M18PA-TMS-60C**
NPN Light-ON	**LHR-M18PA-PMS-301**	**LHR-M18PA-TMS-301**
NPN Light-ON + Dark-ON	**LHR-M18PA-PMS-101**	**LHR-M18PA-TMS-101**
NPN Light-ON + stability alarm	**LHR-M18PA-PMS-10A**	**LHR-M18PA-TMS-10A**
Other types available	Cable version	Cable version

STANDARD

PHOTOELECTRIC

HOUSING SIZE	M18	M18
OPERATING PRINCIPLE	DIFFUSE SENSOR	DIFFUSE SENSOR
SENSING RANGE MM	1200	1200

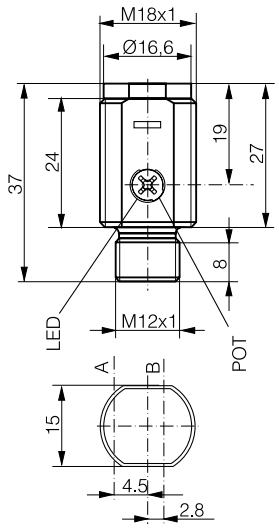

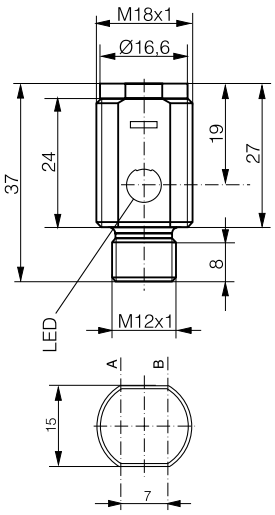

DATA	IO-Link	IO-Link
Light source	LED red 630 nm	LED red 630 nm
Switching frequency (normal mode)	≤ 1500 Hz	≤ 1500 Hz
Setup	Potentiometer	IO-Link
PNP Light-ON	**LTR-M18PA-PMS-403**	**LTR-M18PA-NMS-403**
PNP Light-ON + Dark-ON	**LTR-M18PA-PMS-603**	
PNP Light-ON + stability alarm	**LTR-M18PA-PMS-60C**	
NPN Light-ON	**LTR-M18PA-PMS-301**	
NPN Light-ON + Dark-ON	**LTR-M18PA-PMS-101**	
NPN Light-ON + stability alarm	**LTR-M18PA-PMS-104**	
Other types available	Cable version	Cable version

M18P SERIES

HOUSING SIZE	M18	M18
OPERATING PRINCIPLE	REFLEX SENSOR	THROUGH-BEAM SENSOR
SENSING RANGE MM	7000	30,000

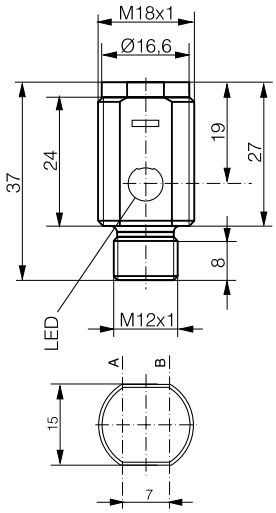

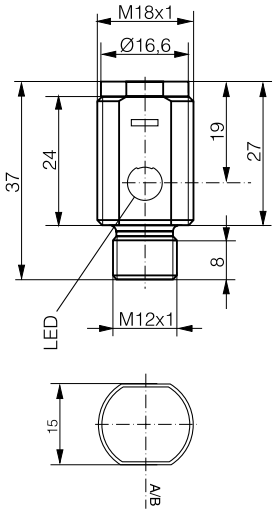

DATA	IO-Link	IO-Link
Light source	LED red polarized 630 nm	LED red 630 nm
Switching frequency (normal mode)	≤ 1500 Hz	≤ 1000 Hz
Setup	IO-Link	IO-Link
Emitter		**LLR-M18PA-NMS-400**
PNP Dark-ON	**LRR-M18PA-NMS-404**	**LLR-M18PA-NMS-404**
PNP Light-ON + Dark-ON	**LRR-M18PA-NMS-603**	**LLR-M18PA-NMS-603**
PNP Dark-ON + stability alarm	**LRR-M18PA-NMS-60D**	**LLR-M18PA-NMS-60D**
NPN Dark-ON	**LRR-M18PA-NMS-302**	**LLR-M18PA-NMS-302**
NPN Light-ON + Dark-ON	**LRR-M18PA-NMS-101**	**LLR-M18PA-NMS-101**
NPN Dark-ON + stability alarm	**LRR-M18PA-NMS-10B**	**LLR-M18PA-NMS-10B**
Other types available	Cable version	Cable version

STANDARD
M18

PHOTOELECTRIC SENSORS

ADVANTAGES

- ✓ M18 sensor series
- ✓ Models for lateral sensing
- ✓ Rugged metal housing
- ✓ Shock & vibration resistant due to fully potted electronics
- ✓ Laser types (protection class 2) for accurate detection of smallest targets
- ✓ Sensing range up to 50 m
- ✓ **IO**-Link in 2019

WIRING DIAGRAMS

PNP or NPN, 1 output

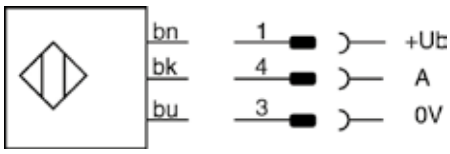

PNP or NPN, 2 outputs

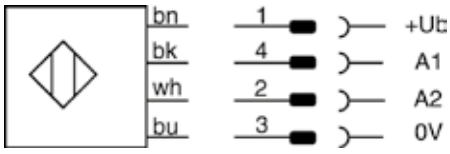

OVERVIEW	1180 / 1180W	1180L
Housing material	Chrome-plated brass	Stainless steel V2A
Degree of protection	IP 67	IP 67
Laser protection class	-	2
Supply voltage range	10 ... 36 VDC	10 ... 36 VDC
Ambient temperature range	-25 ... +55°C / -13 ... +131°F	-10 ... +50°C / +14 ... +122°F
Output current	≤ 200 mA	≤ 200 mA
Switching frequency	≤ 1000 Hz	LT: ≤ 1000 Hz/LL: ≤ 5000 Hz

1180 SERIES

HOUSING SIZE	M18	M18
OPERATING PRINCIPLE	DIFFUSE SENSOR WITH BACKGROUND SUPPRESSION	DIFFUSE SENSOR WITH BACKGROUND SUPPRESSION
SENSING RANGE MM	120	120

PHOTOELECTRIC

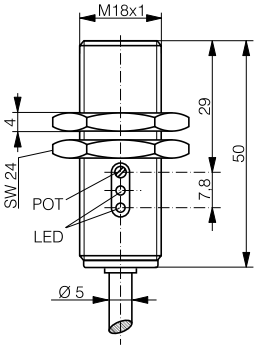

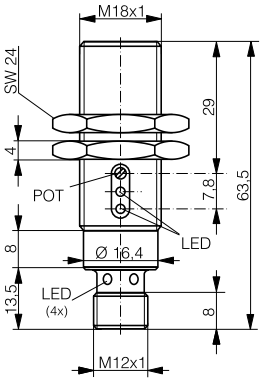

DATA	IO-Link 2019	IO-Link 2019
Light source	LED red 680 nm	LED red 680 nm
Setup	Potentiometer	Potentiometer
PNP Light-ON	**LHK-1180-303**	**LHS-1180-303**
NPN Light-ON	**LHK-1180-301**	**LHS-1180-301**
Other types available		

STANDARD

PHOTOELECTRIC

HOUSING SIZE	M18	M18
OPERATING PRINCIPLE	DIFFUSE SENSOR WITH BACKGROUND SUPPRESSION	DIFFUSE SENSOR
SENSING RANGE MM	120	600

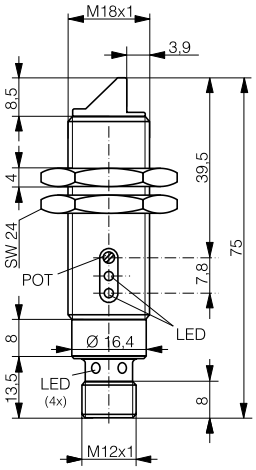

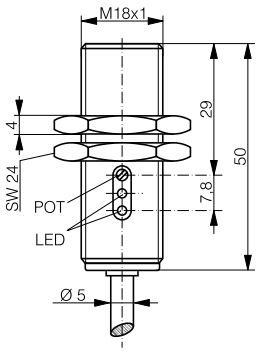

DATA	IO-Link 2019	IO-Link 2019
Light source	LED red 680 nm	LED red 630 nm
Setup	Potentiometer	Potentiometer
PNP Light-ON	**LHS-1180W-303**	
NPN Light-ON	**LHS-1180W-301**	
PNP Light-ON + Dark-ON		**LTK-1180-103**
NPN Light-ON + Dark-ON		**LTK-1180-101**
Other types available	Cable version	

1180 SERIES

M18	M18
DIFFUSE SENSOR	DIFFUSE SENSOR
600	600

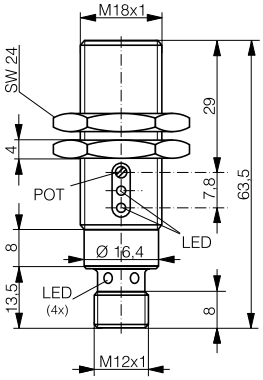

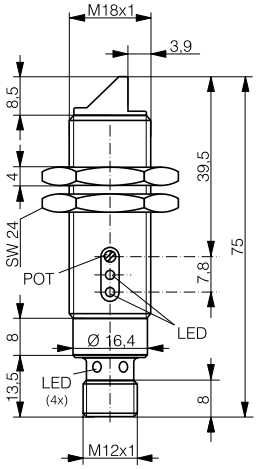

IO-Link 2019	IO-Link 2019
LED red 630 nm	LED red 630 nm
Potentiometer	Potentiometer
LTS-1180-103	**LTS-1180W-103**
LTS-1180-101	**LTS-1180W-101**
	Cable version

STANDARD

PHOTOELECTRIC

HOUSING SIZE	M18	M18
OPERATING PRINCIPLE	REFLEX SENSOR	REFLEX SENSOR
SENSING RANGE MM	2000	2000

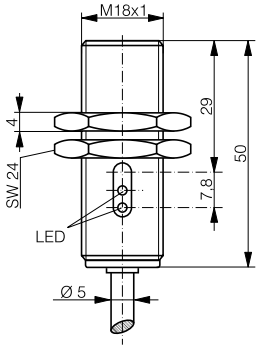

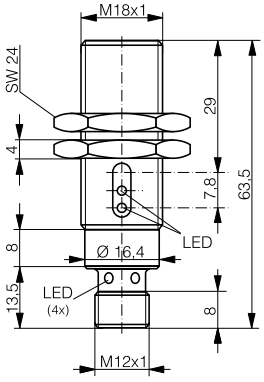

DATA	IO-Link 2019	IO-Link 2019
Light source	LED red polarized 660 nm	LED red polarized 660 nm
Setup	-	-
PNP Dark-ON	**LRK-1180-304**	**LRS-1180-304**
NPN Dark-ON	**LRK-1180-302**	**LRS-1180-302**
Emitter		
PNP Light-ON + Dark-ON		
NPN Light-ON + Dark-ON		
Other types available		

1180 SERIES

M18	M18
REFLEX SENSOR	**THROUGH-BEAM SENSOR**
2000	**20,000**

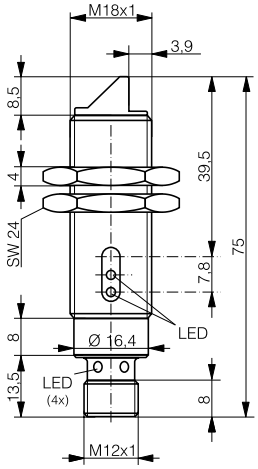

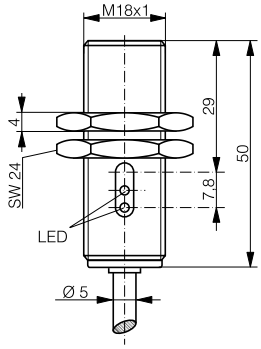

IO-Link 2019	IO-Link 2019
LED red polarized 660 nm	LED red 660 nm
-	-
LRS-1180W-304	
LRS-1180W-302	
	LLK-1180-000
	LLK-1180-003 (receiver)
	LLK-1180-001 (receiver)
Cable version	

STANDARD

PHOTOELECTRIC

HOUSING SIZE	M18	M18
OPERATING PRINCIPLE	THROUGH-BEAM SENSOR	THROUGH-BEAM SENSOR
SENSING RANGE MM	20,000	20,000

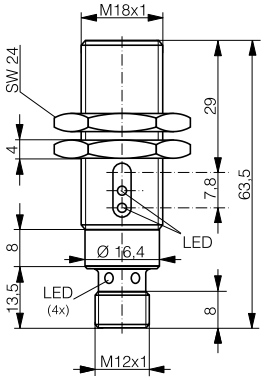

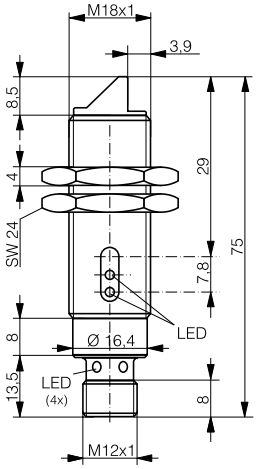

DATA	IO-Link 2019	IO-Link 2019
Light source	LED red 660 nm	LED red 660 nm
Setup	-	-
Emitter	**LLS-1180-000**	**LLS-1180W-000**
PNP Light-ON + Dark-ON	**LLS-1180-003 (receiver)**	**LLS-1180W-003 (receiver)**
NPN Light-ON + Dark-ON	**LLS-1180-001 (receiver)**	**LLS-1180W-001 (receiver)**
Other types available		Cable version

1180 SERIES

M18	M18
DIFFUSE SENSOR	DIFFUSE SENSOR
250	600

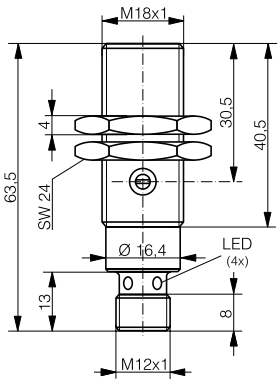

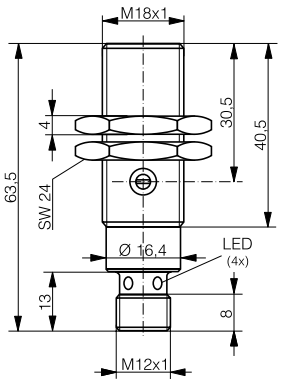

Laser red pulsed 660 nm	Laser red pulsed 660 nm
Potentiometer	Potentiometer
LTS-1180L-103-516	**LTS-1180L-103**
LTS-1180L-101-516	**LTS-1180L-101**
Cable version	Cable version

STANDARD

PHOTOELECTRIC

HOUSING SIZE	M18	M18
OPERATING PRINCIPLE	THROUGH-BEAM SENSOR	THROUGH-BEAM SENSOR
SENSING RANGE MM	50,000	50,000

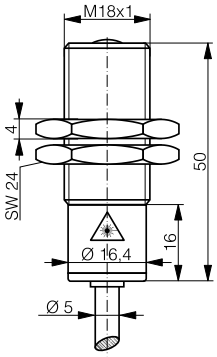

Emitter

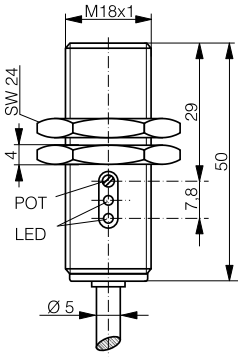

Receiver

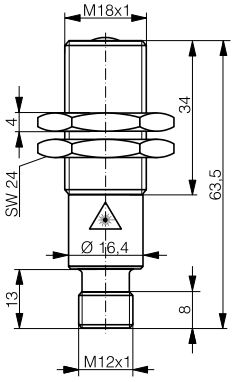

Emitter

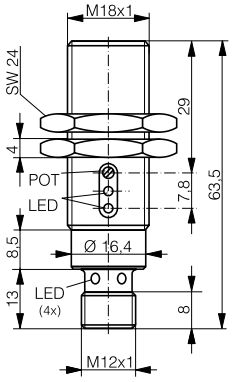

Receiver

DATA		
Light source	Laser red pulsed 660 nm	Laser red pulsed 660 nm
Setup	Potentiometer (receiver)	Potentiometer (receiver)
Emitter	**LLK-1181L-000**	**LLS-1181L-000**
PNP Light-ON + Dark-ON	**LLK-1181L-003 (receiver)**	**LLS-1181L-003 (receiver)**
NPN Light-ON + Dark-ON	**LLK-1181L-001 (receiver)**	**LLS-1181L-001 (receiver)**
Other types available		


CONTRINEX
DW-AD-703-C23
Sn 7 mm
PNP NO 638718 A
IO-Link
CONTRINEX
DW-AS-612

STANDARD
C23

PHOTOELECTRIC SENSORS

ADVANTAGES

- ✓ First-class sensing ranges
- ✓ Small plastic housing, 20 mm x 30 mm x 10 mm
- ✓ Excellent background suppression characteristics with pinpoint LED
- ✓ IO-Link interface available on PNP types
- ✓ Mutual interference immunity
- ✓ Versions available with stability alarm as second output
- ✓ Enclosure rating IP67, Ecolab approved
- ✓ Versatile mounting brackets for ease of installation

WIRING DIAGRAMS

PNP or NPN, 1 output

PNP or NPN, 2 outputs

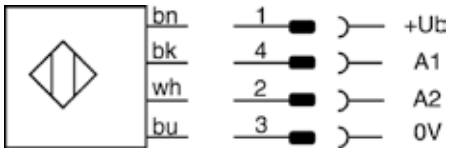

OVERVIEW	C23
Housing material	ABS / PMMA
Degree of protection	IP 67
Supply voltage range	10 ... 30 VDC
Ambient temperature range	-25 ... +65°C / -13 ... +149 °F
Output current	≤ 100 mA
Compatible mounting brackets	See pages 296-298

C23 SERIES

HOUSING SIZE MM	☐ 20 X 30 X 10	☐ 20 X 30 X 10
OPERATING PRINCIPLE	DIFFUSE SENSOR WITH BACKGROUND SUPPRESSION	DIFFUSE SENSOR WITH BACKGROUND SUPPRESSION
SENSING RANGE MM	300	300

PHOTOELECTRIC

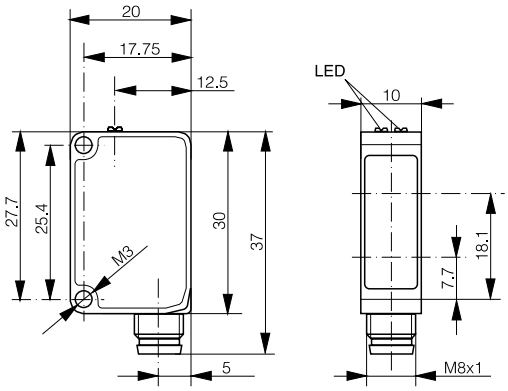

DATA	IO-Link	IO-Link
Light source	Red pinpoint LED 640 nm	Red pinpoint LED 640 nm
Switching frequency (normal mode)	≤ 1000 Hz	≤ 1000 Hz
Setup	Potentiometer	Teach button or IO-Link
PNP Light-ON	**LHR-C23PA-PMS-403**	**LHR-C23PA-TMS-403**
PNP Light-ON + Dark-ON	**LHR-C23PA-PMS-603**	**LHR-C23PA-TMS-603**
PNP Light-ON + stability alarm	**LHR-C23PA-PMS-60C**	**LHR-C23PA-TMS-60C**
NPN Light-ON	**LHR-C23PA-PMS-301**	**LHR-C23PA-TMS-301**
NPN Light-ON + Dark-ON	**LHR-C23PA-PMS-101**	**LHR-C23PA-TMS-101**
NPN Light-ON + stability alarm	**LHR-C23PA-PMS-10A**	**LHR-C23PA-TMS-10A**
Other types available	Cable version	Cable version

STANDARD

PHOTOELECTRIC

HOUSING SIZE MM	☐ 20 X 30 X 10	☐ 20 X 30 X 10
OPERATING PRINCIPLE	DIFFUSE SENSOR	DIFFUSE SENSOR
SENSING RANGE MM	1500	1500

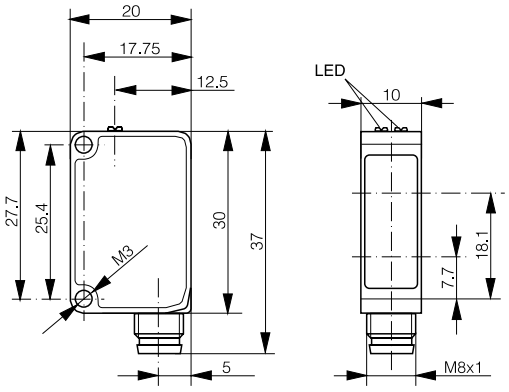

DATA	IO-Link	IO-Link
Light source	Red LED 630 nm	Red LED 630 nm
Switching frequency (normal mode)	≤ 1500 Hz	≤ 1500 Hz
Setup	Potentiometer	IO-Link
PNP Light-ON	**LTR-C23PA-PMS-403**	**LTR-C23PA-NMS-403**
PNP Light-ON + Dark-ON	**LTR-C23PA-PMS-603**	
PNP Light-ON + stability alarm	**LTR-C23PA-PMS-60C**	
NPN Light-ON	**LTR-C23PA-PMS-301**	
NPN Light-ON + Dark-ON	**LTR-C23PA-PMS-101**	
NPN Light-ON + stability alarm	**LTR-C23PA-PMS-104**	
Other types available	Cable version	Cable version

C23 SERIES

HOUSING SIZE MM	☐ 20 X 30 X 10	☐ 20 X 30 X 10
OPERATING PRINCIPLE	REFLEX SENSOR	THROUGH-BEAM SENSOR
SENSING RANGE MM	8000	30,000

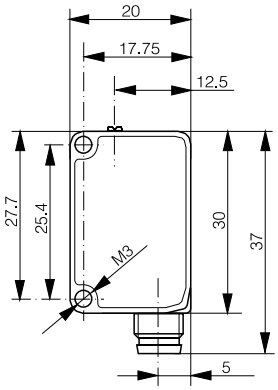

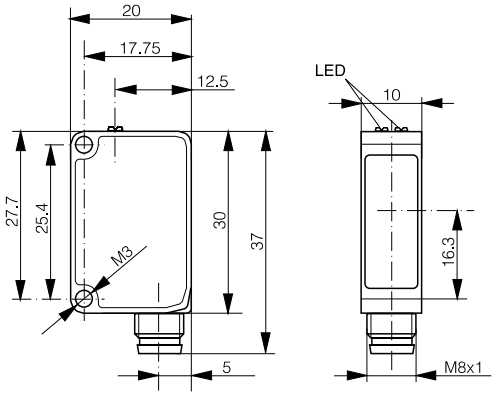

DATA	IO-Link	IO-Link
Light source	LED red polarized 630 nm	LED red polarized 630 nm
Switching frequency (normal mode)	≤ 1500 Hz	≤ 1000 Hz
Setup	IO-Link	IO-Link
Emitter		**LLR-C23PA-NMS-400**
PNP Dark-ON	**LRR-C23PA-NMS-404**	**LLR-C23PA-NMS-404**
PNP Light-ON + Dark-ON	**LRR-C23PA-NMS-603**	**LLR-C23PA-NMS-603**
PNP Dark-ON + stability alarm	**LRR-C23PA-NMS-60D**	**LLR-C23PA-NMS-60D**
NPN Dark-ON	**LRR-C23PA-NMS-302**	**LLR-C23PA-NMS-302**
NPN Light-ON + Dark-ON	**LRR-C23PA-NMS-101**	**LLR-C23PA-NMS-101**
NPN Dark-ON + stability alarm	**LRR-C23PA-NMS-10B**	**LLR-C23PA-NMS-10B**
Other types available	Cable version	Cable version

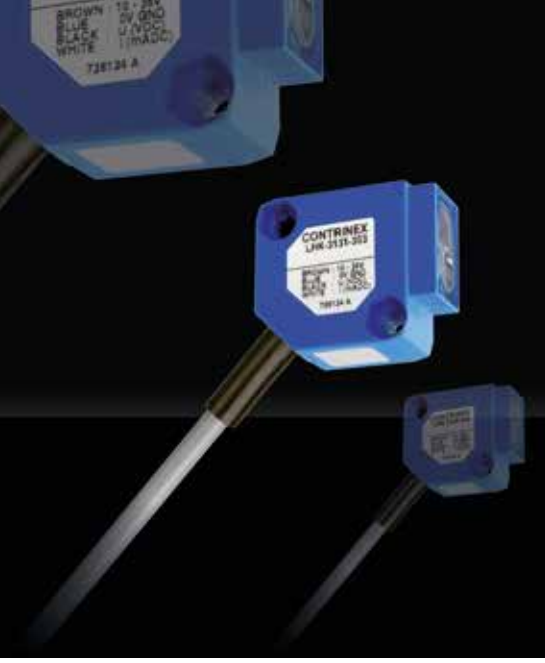

STANDARD 3030

PHOTOELECTRIC SENSORS

ADVANTAGES

- ✓ Complete miniature sensor series 30 x 30 x 15 mm in rugged Crastin housings
- ✓ Sensing range up to 12,000 mm for through-beam type
- ✓ Shock & vibration resistant due to fully potted electronics
- ✓ Diffuse sensors with precise background suppression
- ✓ Polarizing filter (reflex sensors)
- ✓ High system reserves (excess gain)
- ✓ Pre-failure warning (pollution monitoring)
- ✓ Changeover outputs
- ✓ Analog outputs

WIRING DIAGRAMS

PNP or NPN, 1 output

PNP or NPN, 2 outputs

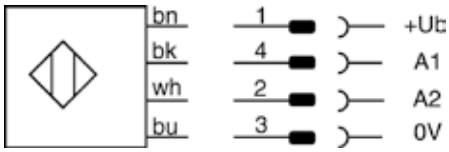

Analog, 2 outputs

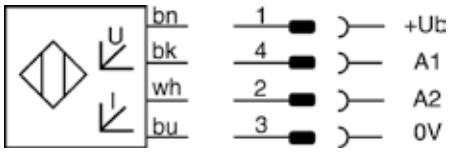

OVERVIEW	3#3#
Housing material	PBTP (Crastin)
Degree of protection	IP 67
Supply voltage range	10 ... 36 VDC / 15 ... 36 VDC (LA#-3130-119)
Ambient temperature range	-25 ... +55°C / -13 ... +131 °F
Output current	≤ 200 mA / -- (LA)
Compatible mounting brackets	See page 301

3030 SERIES

HOUSING SIZE MM	☐ 30 X 30 X 15	☐ 30 X 30 X 15
OPERATING PRINCIPLE	WITH ANALOG OUTPUT	DIFFUSE SENSOR WITH BACKGROUND SUPPRESSION
SENSING RANGE MM	100	200

PHOTOELECTRIC

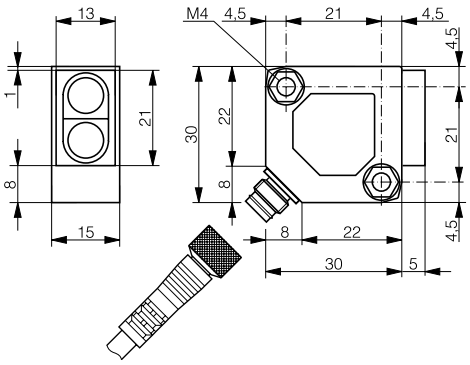

DATA		
Light source	LED red 660 nm	LED red 660 nm
Max. switching frequency		500 Hz
Setup	Potentiometer	Potentiometer
Analog output	**LAS-3130-119**	
PNP Light-ON + Dark-ON		**LHS-3130-103**
NPN Light-ON + Dark-ON		**LHS-3130-101**
Other types available	Cable version	

STANDARD

PHOTOELECTRIC

HOUSING SIZE MM	☐ 30 X 30 X 15	☐ 30 X 30 X 15
OPERATING PRINCIPLE	DIFFUSE SENSOR WITH BACKGROUND SUPPRESSION	DIFFUSE SENSOR WITH BACKGROUND SUPPRESSION
SENSING RANGE MM	200	200

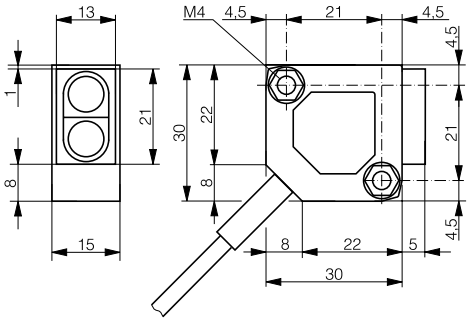

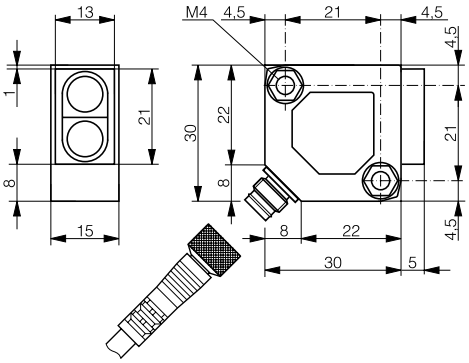

DATA		
Light source	LED red 660 nm	LED red 660 nm
Max. switching frequency	500 Hz	500 Hz
Setup	Potentiometer	Potentiometer
PNP Light-ON	**LHK-3131-303**	**LHS-3131-303**
NPN Light-ON	**LHK-3131-301**	**LHS-3131-301**
Other types available		

3030 SERIES

☐ 30 X 30 X 15	☐ 30 X 30 X 15
DIFFUSE SENSOR	DIFFUSE SENSOR
600	600

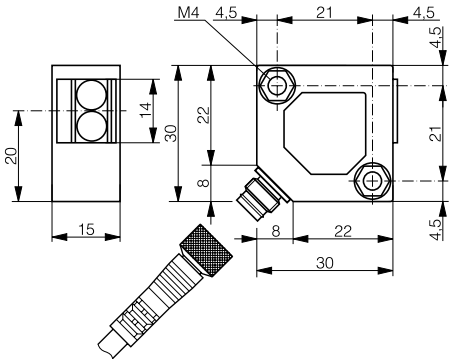

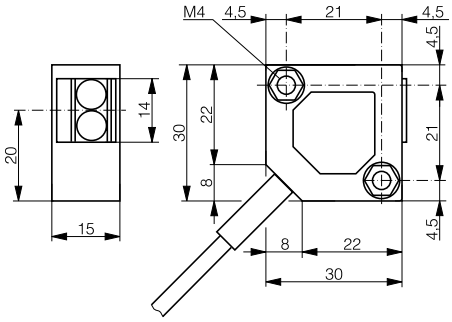

IR LED 880 nm	IR LED 880 nm
1000 Hz	1000 Hz
Potentiometer	Potentiometer
LTS-3031-303	**LTK-3031-303**
LTS-3031-301	**LTK-3031-301**

STANDARD

PHOTOELECTRIC

HOUSING SIZE MM	☐ 30 X 30 X 15	☐ 30 X 30 X 15
OPERATING PRINCIPLE	DIFFUSE SENSOR	DIFFUSE SENSOR
SENSING RANGE MM	1200	1200

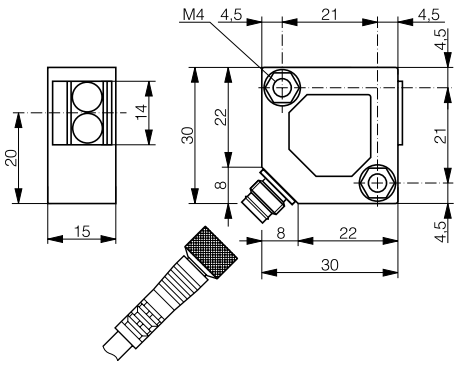

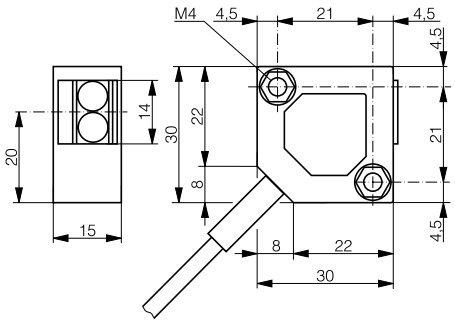

DATA		
Light source	IR LED 880 nm	IR LED 880 nm
Max. switching frequency	1000 Hz	1000 Hz
Setup	Potentiometer	Potentiometer
PNP Light-ON + Dark-ON	**LTS-3030-103**	**LTK-3030-103**
NPN Light-ON + Dark-ON	**LTS-3030-101**	**LTK-3030-101**
PNP Dark-ON		
NPN Dark-ON		
Other types available		

3030 SERIES

☐ 30 X 30 X 15	☐ 30 X 30 X 15
REFLEX SENSOR	**REFLEX SENSOR**
2000	**2000**

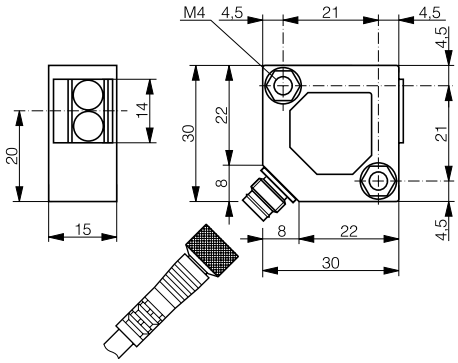

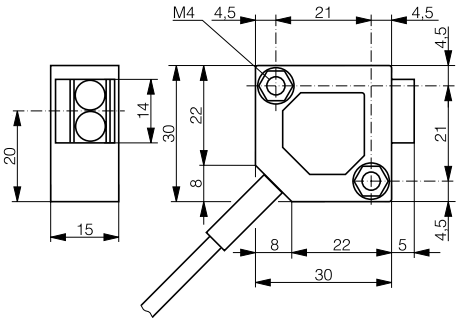

LED red polarized 660 nm	LED red polarized 660 nm
1000 Hz	1000 Hz
Potentiometer	Potentiometer
LRS-3031-304	**LRK-3031-304**
LRS-3031-302	**LRK-3031-302**

STANDARD

PHOTOELECTRIC

HOUSING SIZE MM	☐ 30 X 30 X 15	☐ 30 X 30 X 15
OPERATING PRINCIPLE	REFLEX SENSOR	REFLEX SENSOR
SENSING RANGE MM	4000	4000

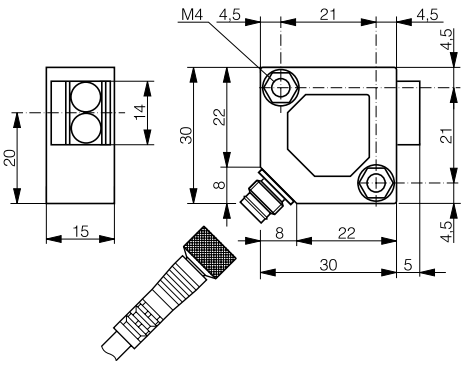

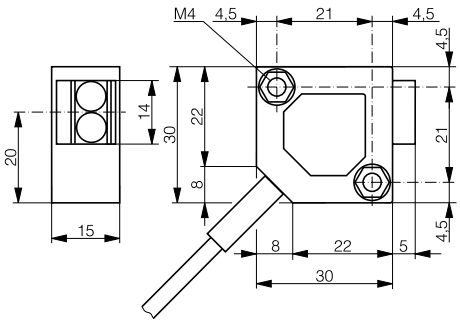

DATA		
Light source	LED red polarized 660 nm	LED red polarized 660 nm
Max. switching frequency	1000 Hz	1000 Hz
Setup	Potentiometer	Potentiometer
Emitter		
PNP Light-ON + Dark-ON	**LRS-3030-103**	**LRK-3030-103**
NPN Light-ON + Dark-ON	**LRS-3030-101**	**LRK-3030-101**
PNP Dark-ON		
NPN Dark-ON		
Other types available		

3030 SERIES

☐ 30 X 30 X 15	☐ 30 X 30 X 15
THROUGH-BEAM SENSOR	**THROUGH-BEAM SENSOR**
6000	**12,000**

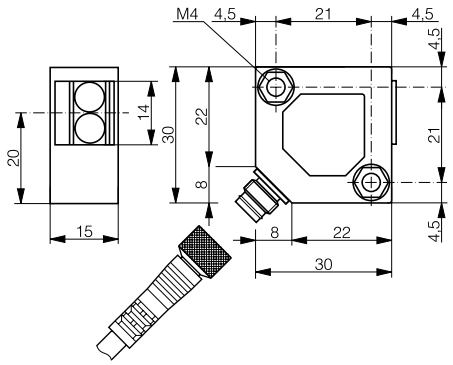

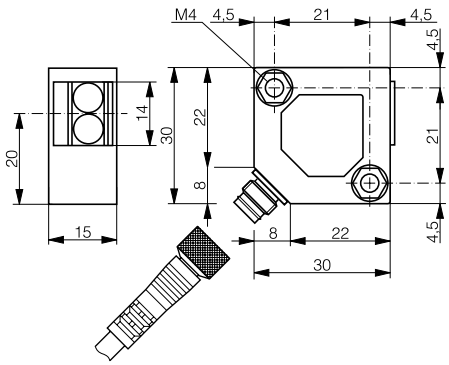

IR LED 880 nm	IR LED 880 nm
1000 Hz	1000 Hz
Potentiometer	Potentiometer
LLS-3031-200	**LLS-3030-000**
	LLS-3030-003 (receiver)
LLS-3031-204 (receiver)	
LLS-3031-202 (receiver)	
Cable version	

STANDARD
4050

PHOTOELECTRIC SENSORS

ADVANTAGES

- ✓ Compact plastic housing, 40 mm x 50 mm x 15 mm
- ✓ Excellent background suppression characteristics
- ✓ Reflex types with special autocollimation optics
- ✓ Adjustable connector
- ✓ Ecolab tested and approved

WIRING DIAGRAMS

PNP or NPN, 2 outputs

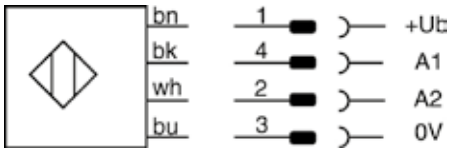

Emitter

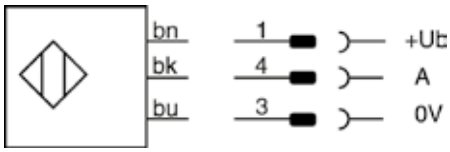

OVERVIEW	4050
Housing material	PBTP
Degree of protection	IP 67
Supply voltage range	10 ... 36 VDC
Ambient temperature range	-5 ... +55°C / 23 ... +131°F
Output current	≤ 200 mA
Compatible mounting brackets	See page 302

4050 SERIES

HOUSING SIZE MM	☐ 40 X 50 X 15	☐ 40 X 50 X 15
OPERATING PRINCIPLE	DIFFUSE SENSOR WITH BACKGROUND SUPPRESSION	DIFFUSE SENSOR
SENSING RANGE MM	500	1200

PHOTOELECTRIC

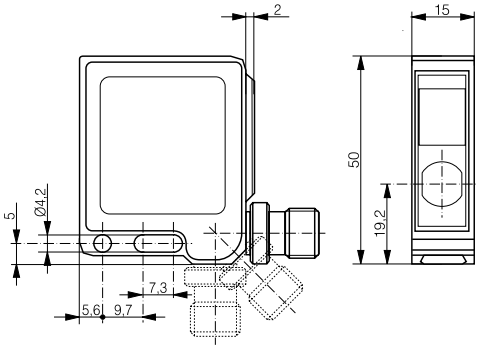

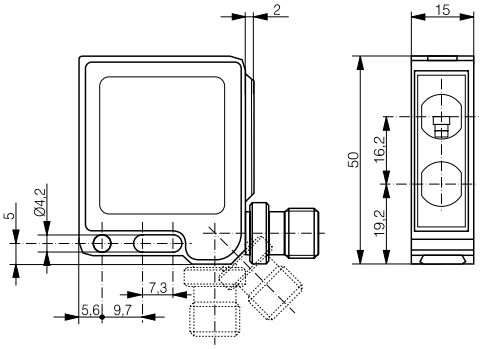

DATA		
Light source	LED red 630 nm	LED red 630 nm
Max. switching frequency	500 Hz	1500 Hz
Setup	Potentiometer	Potentiometer
PNP Light-ON + Dark-ON	**LHS-4150-103**	**LTS-4150-103**
NPN Light-ON + Dark-ON	**LHS-4150-101**	**LTS-4150-101**
Other types available	Cable version	Cable version

STANDARD

PHOTOELECTRIC

HOUSING SIZE MM	☐ 40 X 50 X 15	☐ 40 X 50 X 15
OPERATING PRINCIPLE	REFLEX SENSOR	THROUGH-BEAM SENSOR
SENSING RANGE MM	4000	50,000

AUTOCOLLIMATION

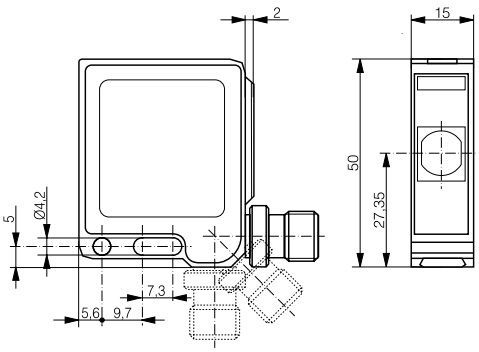

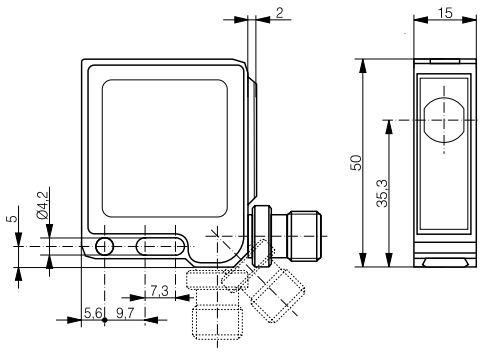

DATA		
Light source	LED red polarized 680 nm	LED red 630 nm
Max. switching frequency	1500 Hz	1500 Hz
Setup	Potentiometer	Potentiometer
PNP Light-ON + Dark-ON	**LRS-4150-103**	**LLS-4150-003 (receiver)**
NPN Light-ON + Dark-ON	**LRS-4150-101**	**LLS-4150-001 (receiver)**
Emitter		**LLS-4150-000**
Other types available	Cable version	Cable version


CONTRINEX
DW-AD-703-C23
Sn 7 mm
PNP NO 638718 A
IO-Link
CONTRINEX
DW-AS-612

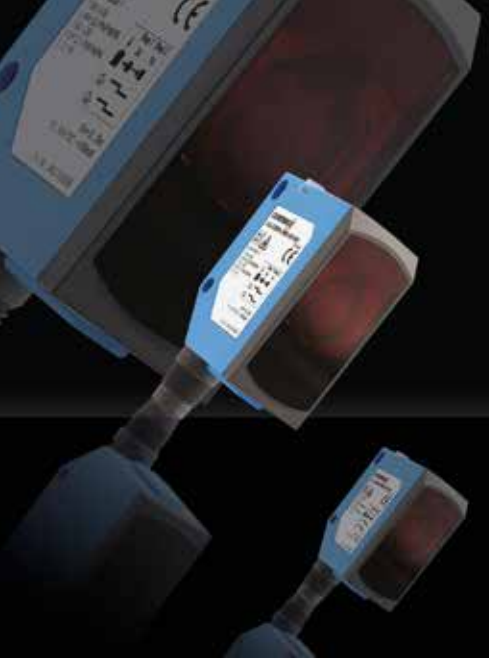

STANDARD
C55

PHOTOELECTRIC SENSORS

ADVANTAGES

- ✓ Compact plastic housing 50 mm x 50 mm x 23 mm, IP67 & IP69K, Ecolab certified
- ✓ Time-Of-Flight principle for background suppression
- ✓ Laser class 1 emission
- ✓ Range up to 5000 mm
- ✓ Reliable detection of tilted objects

WIRING DIAGRAM

PNP / NPN auto-detect, 2 outputs + Teach

OVERVIEW	C55
Housing material	ABS / PMMA
Degree of protection	IP 67 / IP 69K
Supply voltage range	18 ... 30 VDC
Ambient temperature range	-40 ... +60°C / -40 ... +140°F
Output current	≤ 100 mA
Switching frequency	≤ 500 Hz
Setup	Teach button
Compatible mounting brackets	See page 299

C55 SERIES

HOUSING SIZE MM	☐ 50 X 50 X 23
OPERATING PRINCIPLE	DIFFUSE SENSOR WITH BACKGROUND SUPPRESSION
SENSING RANGE MM	5000

PHOTOELECTRIC

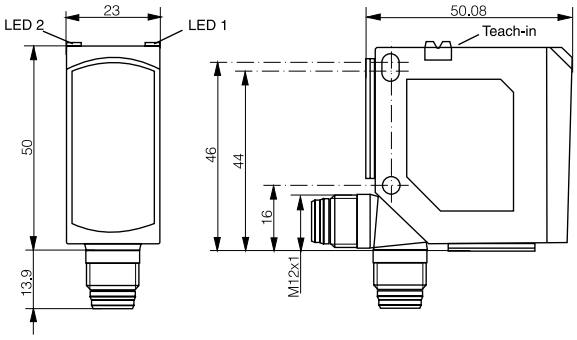

DATA	
Light source	Laser class 1 red 650 nm
Light spot size	5 mm x 4 mm at 3000 mm
PNP/NPN auto-detect (x2)	**LHL-C55PA-TMS-107-501**
Other types available	

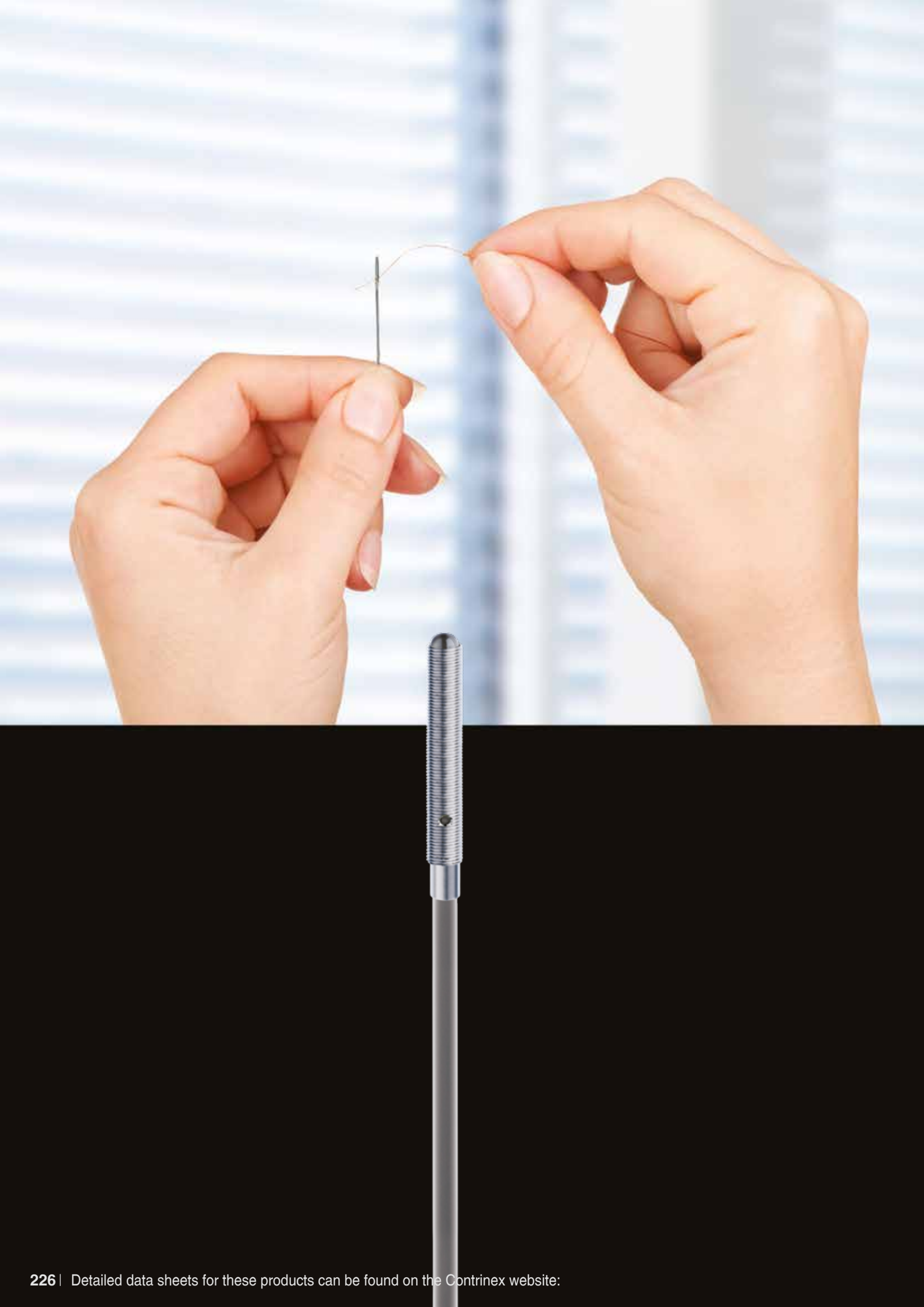

SMALLEST ON THE MARKET

MINIATURE

PHOTOELECTRIC SENSORS

KEY ADVANTAGES

1040 / 1050 / 0507 series

- ✓ Rugged diffuse or through-beam sensors in steel housing: ∅ 4, M5 or 5 mm x 7 mm x 40 mm
- ✓ Steel sensors with sapphire-glass sensing face, scratch and chemically resistant
- ✓ Accurate target detection due to cylindrical light beam
- ✓ IO-Link in 2019

C12 series

- ✓ Plastic housing, 13 mm x 21 mm / 27 mm x 7 mm
- ✓ Red pinpoint LED, small visible light spot
- ✓ Long sensing ranges
- ✓ Excellent background suppression up to 120 mm with 3-turn potentiometer

RANGE OVERVIEW	Series	Diffuse	Background suppression	Reflex	Through-beam
MINIATURE	1040 (Ø4)	p. 229-231			p. 231
	1050 (M5)	p. 232-234			p. 235
	0507 (5x7x40)	p. 237			
	C12 (13x21/27x7)		p. 239-240	p. 240	p. 241

MINIATURE 1040/1050

PHOTOELECTRIC SENSORS

ADVANTAGES

- ✓ Rugged metal housing
- ✓ Rugged sapphire-glass or glass sensing face, scratch & chemically resistant
- ✓ Shock & vibration resistant due to fully vacuum-potted electronics
- ✓ Accurate target detection due to cylindrical light beam

WIRING DIAGRAM

PNP or NPN, 1 output

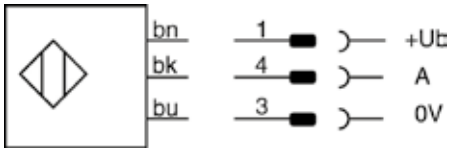

OVERVIEW	1040 / 1050
Housing material	Stainless steel V2A
Light source	IR LED 880 nm
Degree of protection	IP 67
Supply voltage range	10 ... 30 VDC
Ambient temperature range	0 ... +55 °C / 32 ... +131 °F
Output current	≤ 100 mA
Switching frequency	≤ 250 Hz

1040 SERIES

HOUSING SIZE MM	Ø 4	Ø 4
OPERATING PRINCIPLE	DIFFUSE SENSOR	DIFFUSE SENSOR
SENSING RANGE MM	10	10

PHOTOELECTRIC

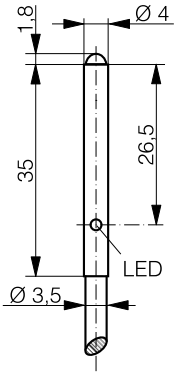

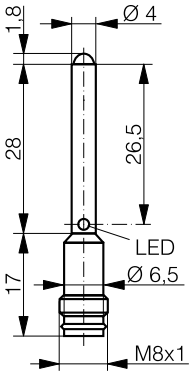

DATA	IO-Link 2019	IO-Link 2019
Lens material	Sapphire glass	Sapphire glass
PNP Light-ON	**LTK-1040-303-505**	**LTS-1040-303-505**
NPN Light-ON	**LTK-1040-301-505**	**LTS-1040-301-505**
Other types available		

MINIATURE

PHOTOELECTRIC

HOUSING SIZE MM	Ø 4	Ø 4
OPERATING PRINCIPLE	DIFFUSE SENSOR	DIFFUSE SENSOR
SENSING RANGE MM	20	20

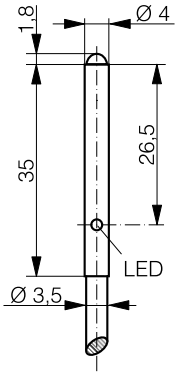

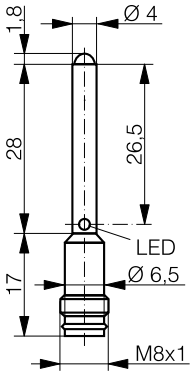

DATA	IO-Link 2019	IO-Link 2019
Lens material	Sapphire glass	Sapphire glass
Emitter		
PNP Light-ON	**LTK-1040-303-506**	**LTS-1040-303-506**
NPN Light-ON	**LTK-1040-301-506**	**LTS-1040-301-506**
PNP Dark-ON		
NPN Dark-ON		
Other types available		

1040 SERIES

Ø 4	Ø 4	Ø 4
DIFFUSE SENSOR	DIFFUSE SENSOR	THROUGH-BEAM SENSOR
50	50	250

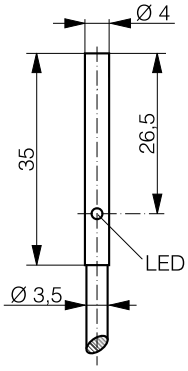

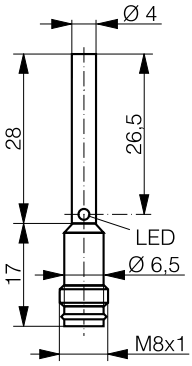

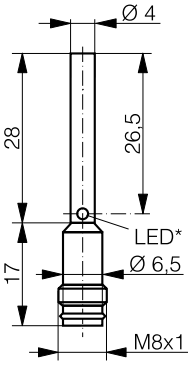

* receiver only

IO-Link 2019	IO-Link 2019	IO-Link 2019
Glass	Glass	Glass
		LLS-1040-200
LTK-1040-303	**LTS-1040-303**	
LTK-1040-301	**LTS-1040-301**	
		LLS-1040-204 (receiver)
		LLS-1040-202 (receiver)
		Cable version

MINIATURE

PHOTOELECTRIC

HOUSING SIZE	M5	M5
OPERATING PRINCIPLE	DIFFUSE SENSOR	DIFFUSE SENSOR
SENSING RANGE MM	10	10

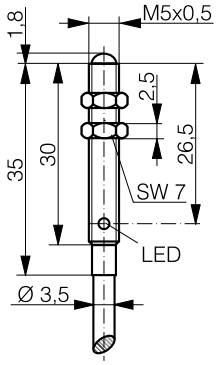

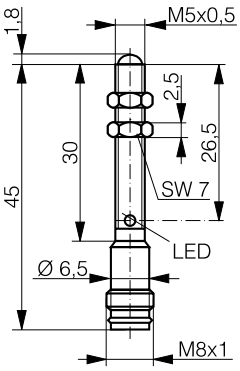

DATA	IO-Link 2019	IO-Link 2019
Lens material	Sapphire glass	Sapphire glass
PNP Light-ON	**LTK-1050-303-505**	**LTS-1050-303-505**
NPN Light-ON	**LTK-1050-301-505**	**LTS-1050-301-505**
Other types available		

1050 SERIES

M5	M5
DIFFUSE SENSOR	DIFFUSE SENSOR
20	20

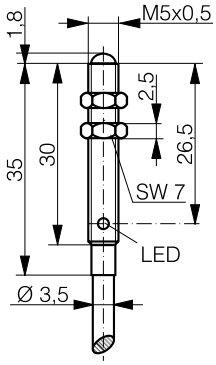

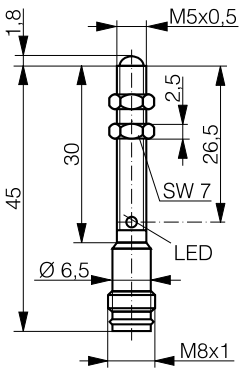

IO-Link 2019	IO-Link 2019
Sapphire glass	Sapphire glass
LTK-1050-303-506	**LTS-1050-303-506**
LTK-1050-301-506	**LTS-1050-301-506**

MINIATURE

HOUSING SIZE	M5	M5
OPERATING PRINCIPLE	DIFFUSE SENSOR	DIFFUSE SENSOR
SENSING RANGE MM	50	50

PHOTOELECTRIC

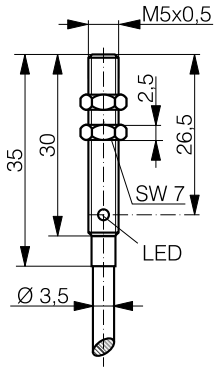

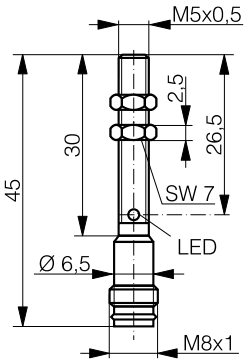

DATA	IO-Link 2019	IO-Link 2019
Lens material	Glass	Glass
Emitter		
PNP Light-ON	**LTK-1050-303**	**LTS-1050-303**
NPN Light-ON	**LTK-1050-301**	**LTS-1050-301**
PNP Dark-ON		
NPN Dark-ON		
Other types available		

M5

THROUGH-BEAM SENSOR

250

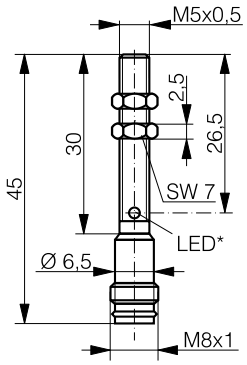

* receiver only

IO-Link 2019	
Glass	
LLS-1050-200	
LLS-1050-204 (receiver)	
LLS-1050-202 (receiver)	
Cable version	

MINIATURE 0507

PHOTOELECTRIC SENSORS

ADVANTAGES

- ✓ Rugged metal housing
- ✓ Rugged sapphire-glass or glass sensing face, scratch & chemically resistant
- ✓ Shock & vibration resistant due to fully vacuum-potted electronics

WIRING DIAGRAM

PNP or NPN, 1 output

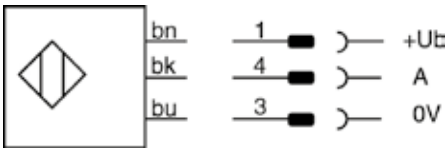

OVERVIEW	0507
Housing material	Stainless steel V2A
Light source	IR LED 880 nm
Degree of protection	IP 67
Supply voltage range	10 ... 30 VDC
Ambient temperature range	0 ... +55°C / 32 ... +131 °F
Output current	≤ 100 mA
Switching frequency	≤ 250 Hz

0507 SERIES

HOUSING SIZE MM	☐ 5 X 7 X 40	☐ 5 X 7 X 40	☐ 5 X 7 X 40
OPERATING PRINCIPLE	DIFFUSE SENSOR	DIFFUSE SENSOR	DIFFUSE SENSOR
SENSING RANGE MM	20	50	90

PHOTOELECTRIC

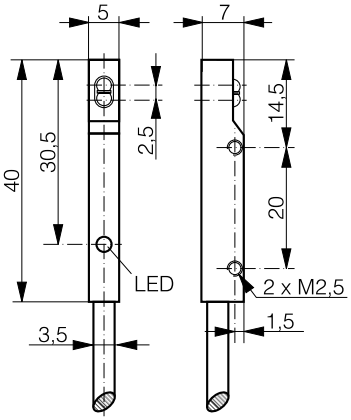

DATA			
Lens material	Sapphire glass	Sapphire glass	Sapphire glass
PNP Light-ON	**LTK-0507-303-501**	**LTK-0507-303**	**LTK-0507-303-502**
NPN Light-ON	**LTK-0507-301-501**	**LTK-0507-301**	
Other types available			

MINIATURE
C12

PHOTOELECTRIC SENSORS

ADVANTAGES

- ✓ Long sensing ranges
- ✓ Background suppression up to 120 mm
- ✓ Excellent background suppression characteristics
- ✓ 45° angle cable outlet for easy installation

WIRING DIAGRAM

PNP or NPN, 1 output

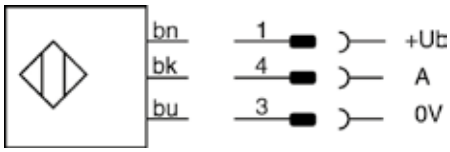

OVERVIEW	C12
Housing material	ABS / PMMA
Light source	Red pinpoint LED 640 nm
Degree of protection	IP 67
Supply voltage range	10 ... 30 VDC
Ambient temperature range	-20 ... +50°C / -4 ... +122 °F
Output current	≤ 50 mA
Switching frequency	≤ 800 Hz

C12 SERIES

HOUSING SIZE MM	☐ 13 X 27 X 7	☐ 13 X 21 X 7
OPERATING PRINCIPLE	DIFFUSE SENSOR WITH BACKGROUND SUPPRESSION	DIFFUSE SENSOR WITH BACKGROUND SUPPRESSION
SENSING RANGE MM	120	15

PHOTOELECTRIC

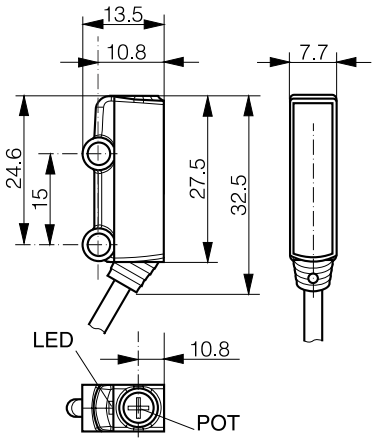

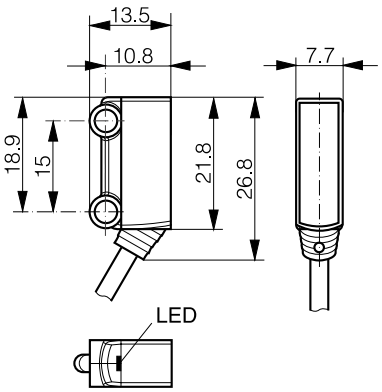

DATA		
Setup	3-turn potentiometer	-
PNP Light-ON	**LHR-C12PA-PLK-303**	**LHR-C12PA-NSK-303**
NPN Light-ON	**LHR-C12PA-PLK-301**	**LHR-C12PA-NSK-301**
Other types available	0.2 m cable + connector S8	0.2 m cable + connector S8

MINIATURE

HOUSING SIZE MM	☐ 13 X 21 X 7	☐ 13 X 21 X 7
OPERATING PRINCIPLE	DIFFUSE SENSOR WITH BACKGROUND SUPPRESSION	REFLEX SENSOR
SENSING RANGE MM	30	3000

PHOTOELECTRIC

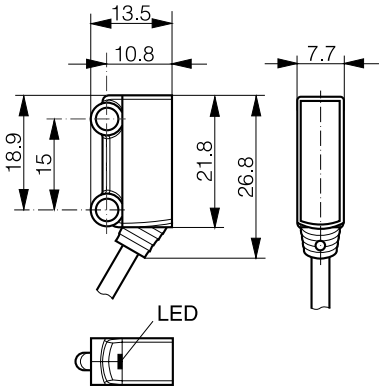

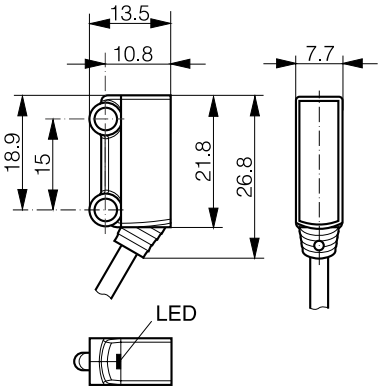

DATA		
Setup	-	-
Emitter		
PNP Light-ON	**LHR-C12PA-NMK-303**	
NPN Light-ON	**LHR-C12PA-NMK-301**	
PNP Dark-ON		**LRR-C12PA-NMK-304**
NPN Dark-ON		**LRR-C12PA-NMK-302**
Other types available	0.2 m cable + connector S8	0.2 m cable + connector S8

☐ 13 X 21 X 7

THROUGH-BEAM SENSOR

2000

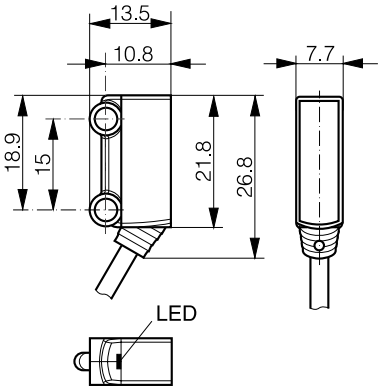

-	
LLR-C12PA-NMK-300	
LLR-C12PA-NMK-304 (receiver)	
LLR-C12PA-NMK-302 (receiver)	
0.2 m cable + connector S8	

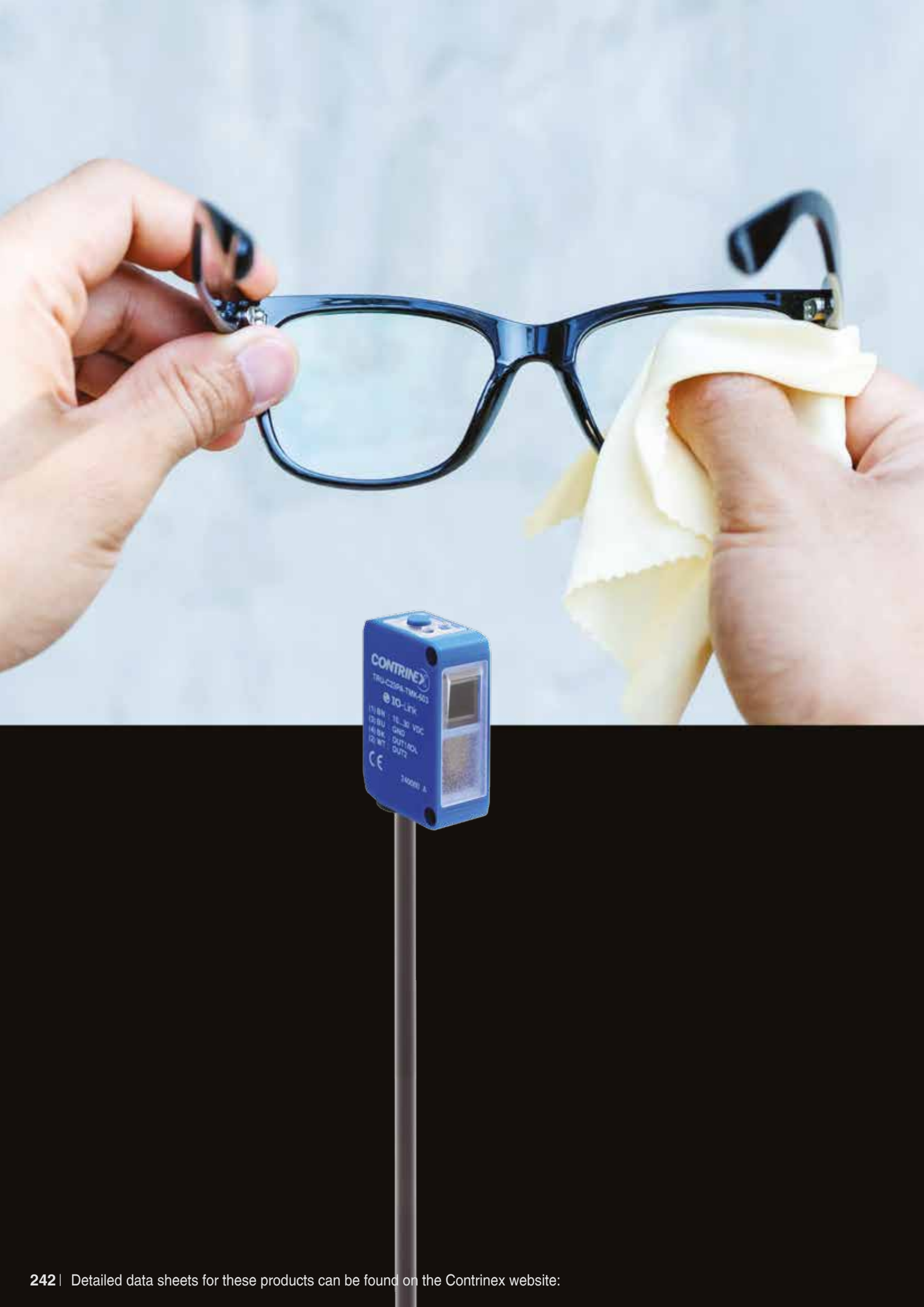
CONTRINEX
IO-Link

OUTSTANDING RELIABILITY AND EASE OF ADJUSTMENT

TRANSPARENT OBJECT

PHOTOELECTRIC SENSORS

KEY ADVANTAGES

C23 Transparent UV

- ✓ Extremely reliable detection thanks to strong absorption of UV light by plastic and glass material
- ✓ Easy sensor set-up, even for thinnest transparent objects
- ✓ Low environmental sensitivity minimizes threshold adjustments and maximizes uptime
- ✓ Sensing range up to 1200 mm
- ✓ IO-Link

C23 Transparent Standard

- ✓ Sensing range up to 5000 mm
- ✓ Red polarized light
- ✓ IO-Link

RANGE OVERVIEW	Series	Reflex, UV light	Reflex, red light
TRANSPARENT OBJECT	C23 (20x30x10)	p. 245	p. 246-247

TRANSPARENT OBJECT

C23

PHOTOELECTRIC SENSORS

ADVANTAGES

C23 Transparent UV

- ✓ Extremely reliable detection thanks to strong absorption of UV light by plastic and glass material
- ✓ Easy sensor set-up, even for thinnest transparent objects
- ✓ Low environmental sensitivity minimizes threshold adjustments and maximizes uptime
- ✓ Autocollimated, polarized UV light beam eliminates blind zone, allowing detection of targets close to the sensor or through a small notch
- ✓ Sensing range up to 1200 mm
- ✓ Adjustment by teach button or IO-Link
- ✓ Mutual interference immunity
- ✓ Enclosure rating IP 67, Ecolab approved

C23 Transparent Standard

- ✓ Sensing range up to 5000 mm
- ✓ Red polarized light
- ✓ Suitable for thicker or larger transparent objects
- ✓ Adjustment by potentiometer or by teach button or IO-Link
- ✓ Enclosure rating IP 67, Ecolab approved

WIRING DIAGRAM

PNP or NPN, 2 outputs

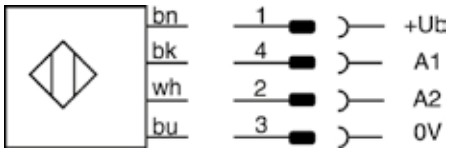

OVERVIEW	C23 TRANSPARENT UV	C23 TRANSPARENT STANDARD
Housing material	ABS / PMMA	ABS / PMMA
Degree of protection	IP 67	IP 67
Supply voltage range	15 ... 30 VDC	10 ... 30 VDC
Ambient temperature range	-25 ... +55°C / -13 ... +131°F	-25 ... +65°C / -13 ... +149 °F
Output current (total both outputs)	≤ 100 mA	≤ 100 mA
Compatible reflectors	See pages 304-305	See pages 303-304
Compatible mounting bracket	See pages 296-297	See pages 296-297

C23 UV LIGHT

HOUSING SIZE MM	☐ 20 X 30 X 10	☐ 20 X 30 X 10
OPERATING PRINCIPLE	TRANSPARENT REFLEX	TRANSPARENT REFLEX
SENSING RANGE MM	1200	1200

PHOTOELECTRIC

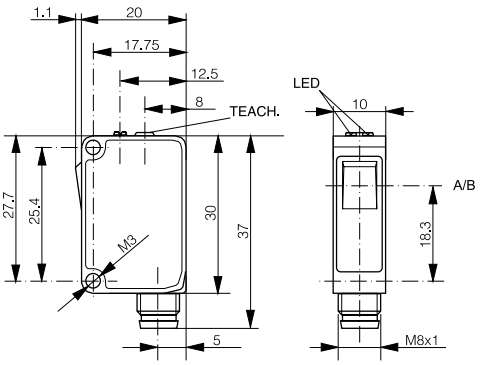

A: emitter axis B: receiver axis

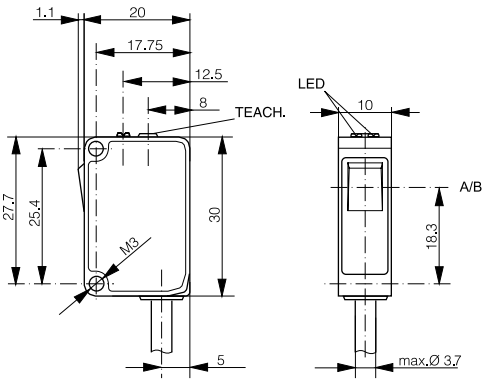

A: emitter axis B: receiver axis

DATA	IO-Link	IO-Link
Light source	LED UV 275 nm, Risk Group 2	LED UV 275 nm, Risk Group 2
Switching frequency (normal mode)	≤ 1000 Hz	≤ 1000 Hz
Setup	Teach button or IO-Link	Teach button or IO-Link
PNP Light-ON + Dark-ON	**TRU-C23PA-TMS-603**	**TRU-C23PA-TMK-603**
PNP Dark-ON + stability alarm	**TRU-C23PA-TMS-60D**	**TRU-C23PA-TMK-60D**
NPN Light-ON + Dark-ON	**TRU-C23PA-TMS-101**	**TRU-C23PA-TMK-101**
NPN Dark-ON + stability alarm	**TRU-C23PA-TMS-10B**	**TRU-C23PA-TMK-10B**
Other types available		

TRANSPARENT

PHOTOELECTRIC

HOUSING SIZE MM	☐ 20 X 30 X 10	☐ 20 X 30 X 10
OPERATING PRINCIPLE	TRANSPARENT REFLEX	TRANSPARENT REFLEX
SENSING RANGE MM	5000	5000

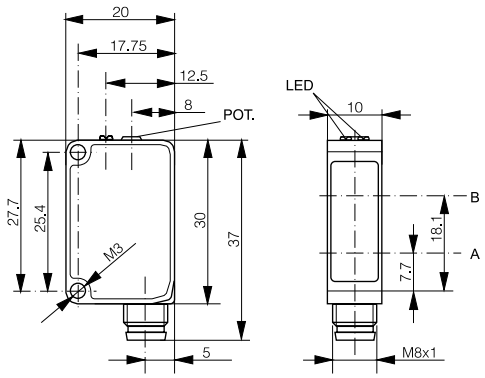

A: emitter axis B: receiver axis

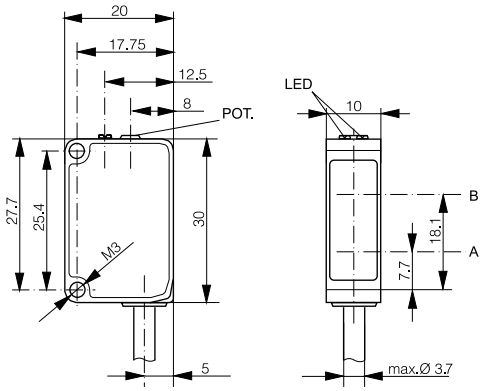

A: emitter axis B: receiver axis

DATA	IO-Link	IO-Link
Light source	LED red polarized 630 nm	LED red polarized 630 nm
Switching frequency (normal mode)	≤ 1500 Hz	≤ 1500 Hz
Setup	Potentiometer	Potentiometer
PNP Light-ON + Dark-ON	**TRR-C23PA-PMS-603**	**TRR-C23PA-PMK-603**
PNP Dark-ON + stability alarm	**TRR-C23PA-PMS-60D**	**TRR-C23PA-PMK-60D**
NPN Light-ON + Dark-ON	**TRR-C23PA-PMS-101**	**TRR-C23PA-PMK-101**
NPN Dark-ON + stability alarm	**TRR-C23PA-PMS-10B**	**TRR-C23PA-PMK-10B**
Other types available		

C23 RED LIGHT

☐ 20 X 30 X 10

TRANSPARENT REFLEX

5000

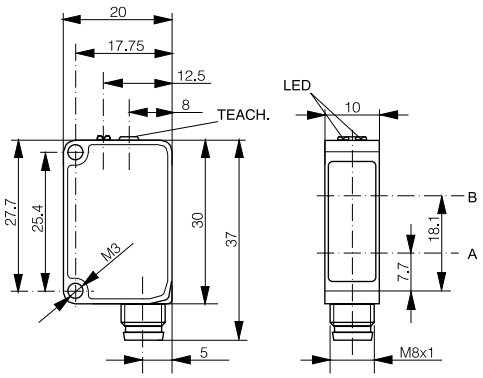

A: emitter axis B: receiver axis

☐ 20 X 30 X 10

TRANSPARENT REFLEX

5000

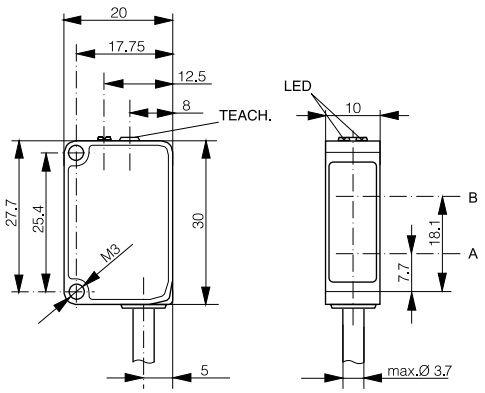

A: emitter axis B: receiver axis

IO-Link	IO-Link
LED red polarized 630 nm	LED red polarized 630 nm
≤ 1500 Hz	≤ 1500 Hz
Teach button or IO-Link	Teach button or IO-Link
TRR-C23PA-TMS-603	**TRR-C23PA-TMK-603**
TRR-C23PA-TMS-60D	**TRR-C23PA-TMK-60D**
TRR-C23PA-TMS-101	**TRR-C23PA-TMK-101**
TRR-C23PA-TMS-10B	**TRR-C23PA-TMK-10B**


IO-Link
Set

FIBER OPTIC

PHOTOELECTRIC SENSORS

KEY ADVANTAGES

Fiber-optic sensors

- ✓ Robust 3030 and 4040 series (30 mm x 30 mm x 15 mm and 40 mm x 40 mm x 19 mm)
- ✓ DIN-rail mounted 3060 series (31 mm x 60 mm x 10 mm) suitable for multiple-sensor applications
- ✓ Distance setting by potentiometer or teach-in
- ✓ IO-Link

Fibers

- ✓ Large selection of types, including cylindrical light beam, multi-beam, liquid level monitoring and low & high temperature
- ✓ Diffuse or through-beam sensing, axial or radial
- ✓ Synthetic fibers with bending radii from 2 mm, suitable for cutting on-site
- ✓ Glass fibers for high temperatures and aggressive environments

RANGE OVERVIEW	Series	Amplifer	Plastic fiber	Glass fiber
FIBER OPTIC	3030 (30x30x15)	p. 252-254	p. 262-270	p. 277
	3060 (31x60x10)	p. 256-259	p. 262-270	
	4040 (40x40x19)	p. 260-261		p. 272-276

PROGRAM OVERVIEW

AMPLIFIERS

SERIES	3030	3031	
HOUSING SIZE	30 x 30 x 15 mm	30 x 30 x 15 mm	
MAX. DISTANCE	120 mm	60 mm	
SETUP	Potentiometer	Potentiometer	
FOR USE WITH SYNTHETIC FIBERS	p. 254	p. 253	
FOR USE WITH GLASS FIBERS	p. 254	p. 253	

OPTICAL FIBERS

HOUSING SIZE		Ø 2.3 mm	M3	Ø 3.2 mm	Ø 4 mm	
SYNTHETIC FIBERS	Diffuse	p. 263	p. 263			
	Through-beam		p. 266	p. 266		
	Cylindrical light beam				p. 268	
	Liquid level monitoring					
	Low and high temperatures					
	Multi-beam detection					
GLASS FIBERS	Diffuse					
	Through-beam					

	3060	3066	3360	4040
	31 x 60 x 10 mm	31 x 60 x 10 mm	31 x 60 x 10 mm	40 x 40 x 19 mm
	200 mm	200 mm	100 mm	150 mm
	Potentiometer	Teach / IO-Link	Potentiometer	Potentiometer
	p. 258	p. 257	p. 259	
				p. 261

	M4	M5	Ø 6 mm	M6	Ø 8 mm	M8	☐ 18 x 32 mm
				p. 264-265			
	p. 266-267			p. 267			
		p. 268					
						p. 269	
	p. 270			p. 270			
							p. 269
			p. 273-274	p. 277	p. 273-274		
	p. 277		p. 275, 276		p. 275-276		

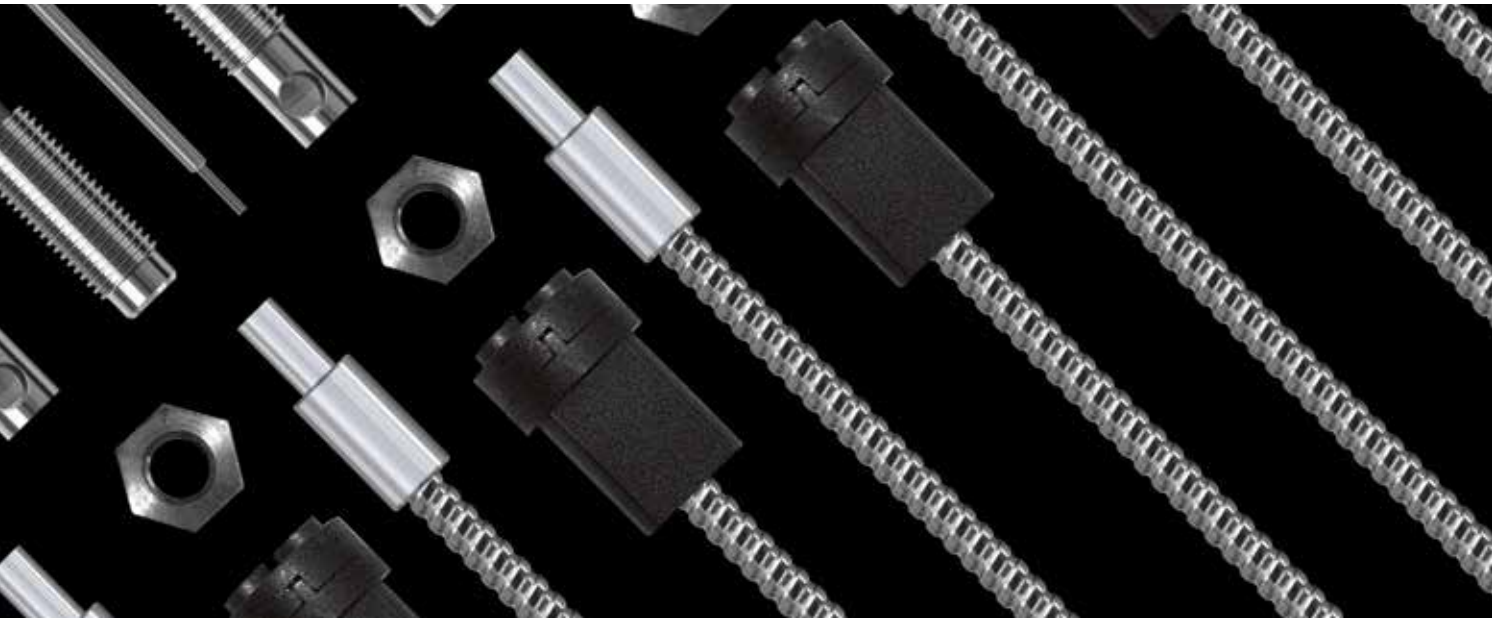

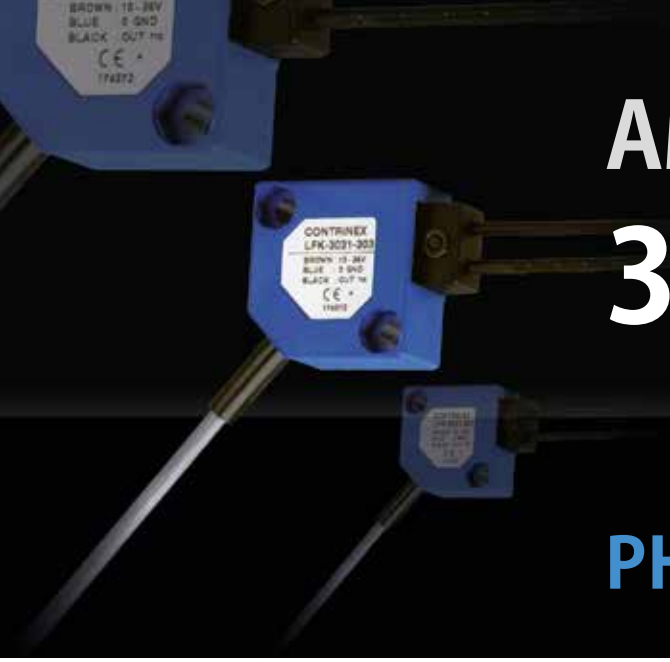

AMPLIFIER 3030

PHOTOELECTRIC SENSORS

ADVANTAGES

- ✓ Fiber-optic amplifiers in rugged Crastin housing 30 x 30 x 15 mm
- ✓ Shock & vibration resistant due to fully potted electronics
- ✓ Sensing range up to 120 mm

WIRING DIAGRAMS

PNP or NPN, 1 output

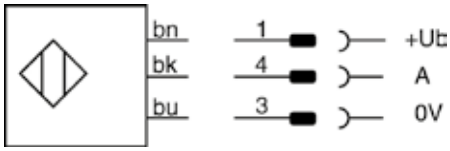

PNP or NPN, 2 outputs

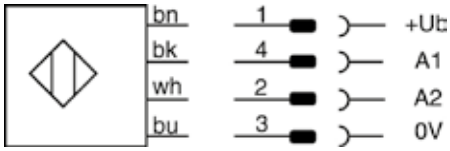

OVERVIEW	3030
Housing material	PBTP (Crastin)
Degree of protection	IP 67
Supply voltage range	10 ... 36 VDC
Ambient temperature range	-25 ... +55°C / -13 ... +131°F
Output current (total both outputs)	≤ 200 mA
Setup	Potentiometer
Compatible mounting bracket	See page 271

3030 SERIES

HOUSING SIZE MM	☐ 30 X 30 X 15	☐ 30 X 30 X 15
OPERATING PRINCIPLE	FIBER-OPTIC AMPLIFIER	FIBER-OPTIC AMPLIFIER
SENSING RANGE MM	60	60

PHOTOELECTRIC

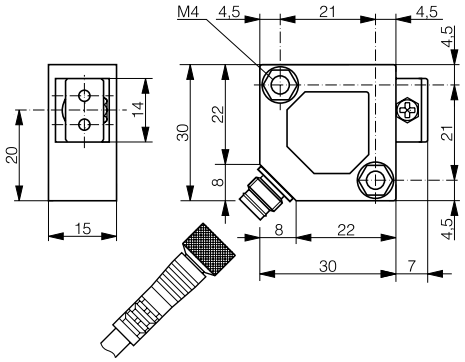

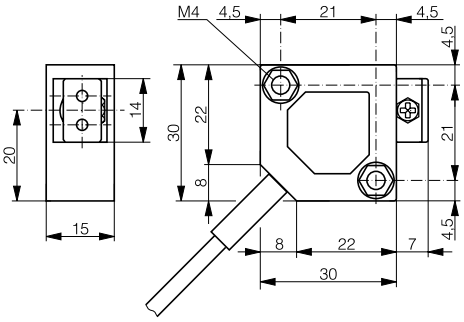

DATA		
Light source	LED red 660 nm	LED red 660 nm
Max. switching frequency	1000 Hz	1000 Hz
PNP Light-ON	**LFS-3031-303**	**LFK-3031-303**
PNP Dark-ON	**LFS-3031-304**	**LFK-3031-304**
NPN Light-ON	**LFS-3031-301**	**LFK-3031-301**
NPN Dark-ON	**LFS-3031-302**	**LFK-3031-302**
Other types available		

AMPLIFIER

PHOTOELECTRIC

HOUSING SIZE MM	☐ 30 X 30 X 15	☐ 30 X 30 X 15
OPERATING PRINCIPLE	FIBER-OPTIC AMPLIFIER	FIBER-OPTIC AMPLIFIER
SENSING RANGE MM	120	120

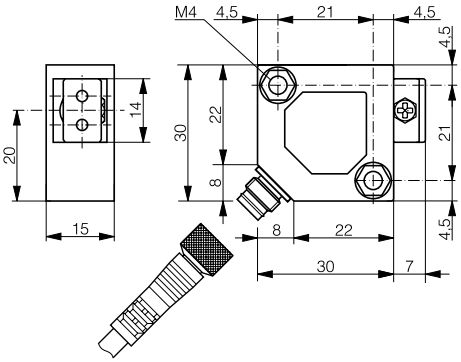

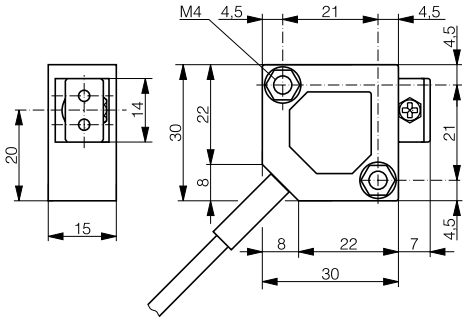

DATA		
Light source	LED red 660 nm	LED red 660 nm
Max. switching frequency	1000 Hz	1000 Hz
PNP Light-ON + Dark-ON	**LFS-3030-103**	**LFK-3030-103**
NPN Light-ON + Dark-ON	**LFS-3030-101**	**LFK-3030-101**
Other types available		


CONTRINEX
DW-AD-703-C23
Sn 7 mm
PNP NO 638718 A
IO-Link
CONTRINEX
DW-AS-612

AMPLIFIER 3060

PHOTOELECTRIC SENSORS

ADVANTAGES

- ✓ Complete series of fiber-optic amplifiers for plastic fibers and DIN-rail mounting
- ✓ Small housings 31 x 60 x 10 mm
- ✓ Sensing ranges up to 200 mm
- ✓ IO-Link
- ✓ Blue light version for glass detection

WIRING DIAGRAMS

PNP or NPN, 2 outputs

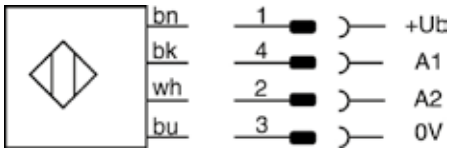

PNP or NPN, 1output + teach-in

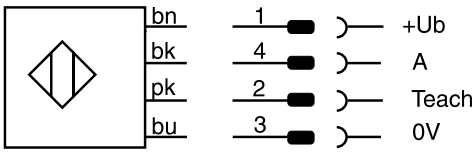

OVERVIEW	3060
Housing material	PBTP (Crastin)
Degree of protection	IP 64
Supply voltage range	10 ... 30 VDC
Ambient temperature range	-25 ... +55°C / -13 ... +131°F // -5 ... +55°C / +23 ... +131°F (3066)
Output current	≤ 200 mA
Compatible mounting bracket	See page 271

3060 SERIES

HOUSING SIZE MM	☐ 31 X 60 X 10	☐ 31 X 60 X 10
OPERATING PRINCIPLE	FIBER-OPTIC AMPLIFIER	FIBER-OPTIC AMPLIFIER
SENSING RANGE MM	200	200

PHOTOELECTRIC

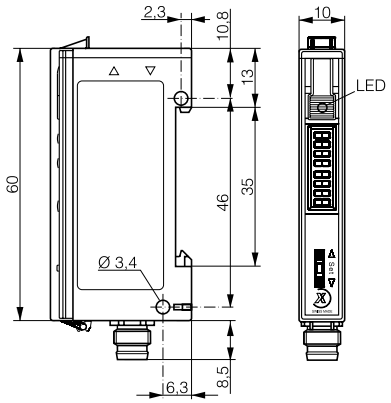

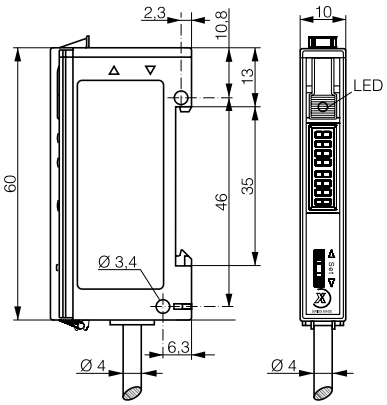

DATA	IO-Link	
Light source	LED red 680 nm	LED red 680 nm
Max. switching frequency	4000 Hz	4000 Hz
Setup	Teach-in	Teach-in
PNP Light-ON/Dark-ON switchable	**LFS-3066-403**	**LFK-3066-403**
NPN Light-ON/Dark-ON switchable	**LFS-3066-301**	**LFK-3066-301**
Other types available		

AMPLIFIER

PHOTOELECTRIC

HOUSING SIZE MM	☐ 31 X 60 X 10	☐ 31 X 60 X 10
OPERATING PRINCIPLE	FIBER-OPTIC AMPLIFIER	FIBER-OPTIC AMPLIFIER
SENSING RANGE MM	200	200

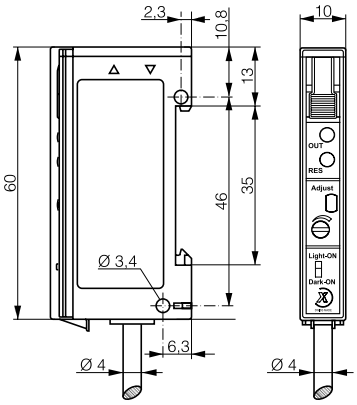

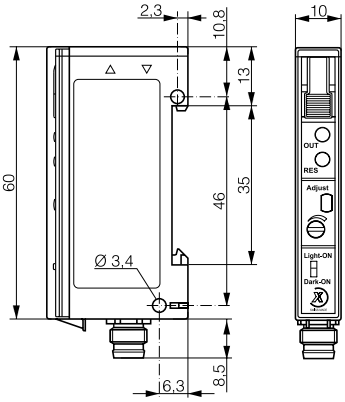

DATA		
Light source	LED red 680 nm	LED red 680 nm
Max. switching frequency	1500 Hz	1500 Hz
Setup	Potentiometer	Potentiometer
PNP Light-ON/Dark-ON switchable + Excess gain	**LFK-3060-103**	**LFS-3060-103**
NPN Light-ON/Dark-ON switchable + Excess gain	**LFK-3060-101**	**LFS-3060-101**
Other types available		

3060 SERIES

□ 31 X 60 X 10	□ 31 X 60 X 10
FIBER-OPTIC AMPLIFIER - BLUE LIGHT	**FIBER-OPTIC AMPLIFIER - BLUE LIGHT**
100	100

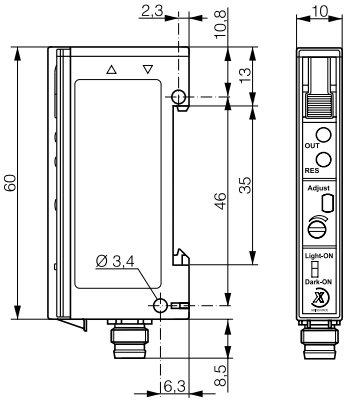

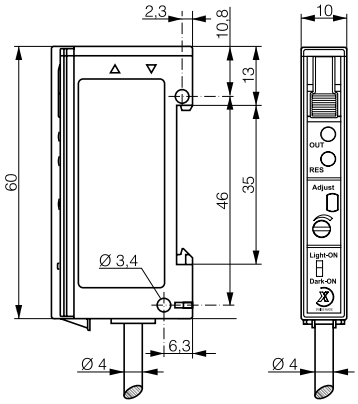

LED blue 465 nm	LED blue 465 nm
1500 Hz	1500 Hz
Potentiometer	Potentiometer
LFS-3360-103	**LFK-3360-103**
LFS-3360-101	**LFK-3360-101**

AMPLIFIER 4040

PHOTOELECTRIC SENSORS

ADVANTAGES

- ✓ Fiber-optic amplifiers for glass fibers
- ✓ Rugged Crastin housing 40 x 40 x 19 mm
- ✓ Shock and vibration resistant due to fully potted electronics
- ✓ Long operating distance of 150 mm with LFG-1030-050 glass fiber
- ✓ Convenient sensitivity adjustment by 20-turn potentiometer

WIRING DIAGRAM

PNP or NPN, 2 outputs

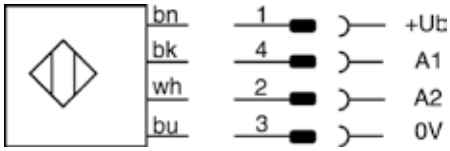

OVERVIEW	4040
Housing material	PBTP (Crastin)
Degree of protection	IP 67
Supply voltage range	10 ... 36 VDC
Ambient temperature range	-25 ... +55°C / -13 ... +131°F
Output current (total of both outputs)	≤ 200 mA
Switching frequency	≤ 1000 Hz
Compatible mounting bracket	See page 271

4040 SERIES

HOUSING SIZE MM	☐ 40 X 40 X 19
OPERATING PRINCIPLE	FIBER-OPTIC AMPLIFIER
SENSING RANGE MM	150

PHOTOELECTRIC

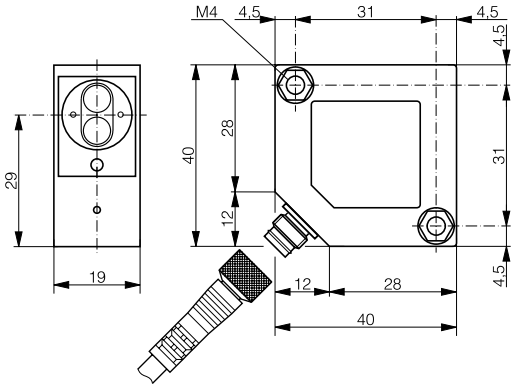

DATA	
Light source	IR LED 880 nm
Setup	Potentiometer
PNP Light-ON + Dark-ON (connector)	**LFS-4040-103**
PNP Light-ON + Dark-ON (cable)	**LFK-4040-103**

SYNTHETIC OPTICAL FIBERS

- ✓ Very small dimensions
- ✓ Long sensing ranges
- ✓ Small bending radii
- ✓ Can be cut on site
- ✓ Large selection of types
- ✓ Mechanically rugged sensing head

TECHNICAL DATA

Ambient temperature range	-25 ... +70°C / -55 ... +105°C*
	(-13 ... +158°F / -67 ... +221°F*)
Standard length	2 m ± 0.1 m (other lengths on request)
Fiber bending radii:	
miniature / multi-beam	15 mm
standard / coaxial	25 mm
low & high temperature	25 mm
liquid level monitoring	25 mm
flexible	2 mm
luminous (enhanced brightness)	40 mm
Bending radius of light-outlet tube	25 mm
Tensile load	30 N max.
Fiber material	PMMA
Sleeve material	Polyethylene
Sensing head material	Stainless steel V2A / PBTP**
Sensing head light-outlet tube material	Stainless steel V2A
Optical attenuation:	
standard / luminous (enhanced brightness)	0.2 dB / m max. at 660 nm
miniature / low & high temperature	0.2 dB / m max. at 660 nm
flexible / coaxial / multi-beam	0.3 dB / m max. at 660 nm
Angle of incidence	See data sheets
Tightening torque:	
M3	1 Nm
M4	2 Nm
M5	3 Nm
M6	4 Nm
M8	10 Nm

* LFP-1002-020-002 / LFP-2002-020-002 ** LFP-1011-020

DIFFUSE SENSING

Dimensions: *light emission on the left*

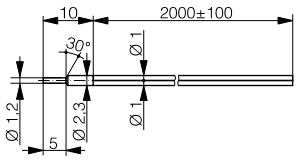

Housing size: ∅ 2.3 mm	Miniature	
Part reference	LFP-1012-020	
Sensing range	with series 3030	40 mm (with 2 m fiber length)
	with series 3031	20 mm (with 2 m fiber length)
	with series 3#6#	70 mm (with 2 m fiber length)
Outside fiber	1 separable double fiber, ∅ 1 mm*	
Inner fiber	∅ 0.5 mm	
Special characteristics	Highest resolution	
* Adaptor included in delivery package		

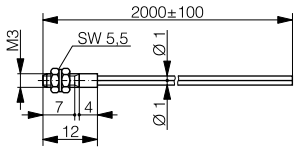

Housing size: M3	Miniature	
Part reference	LFP-1001-020	
Sensing range	with series 3030	40 mm (with 2 m fiber length)
	with series 3031	20 mm (with 2 m fiber length)
	with series 3#6#	70 mm (with 2 m fiber length)
Outside fiber	1 separable double fiber, ∅ 1 mm*	
Inner fiber	∅ 0.5 mm	
Special characteristics	Highest resolution	
* Adaptor included in delivery package		

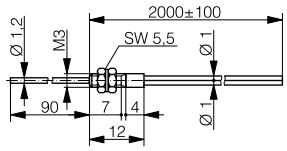

Housing size: M3	Miniature	
Part reference	LFP-1004-020	
Sensing range	with series 3030	40 mm (with 2 m fiber length)
	with series 3031	20 mm (with 2 m fiber length)
	with series 3#6#	70 mm (with 2 m fiber length)
Outside fiber	1 separable double fiber, ∅ 1 mm*	
Inner fiber	∅ 0.5 mm	
Special characteristics	Sensing head with bendable light-outlet tube for ease	
	of positioning; highest resolution	
* Adaptor included in delivery package		

DIFFUSE SENSING

Dimensions: *light emission on the left*

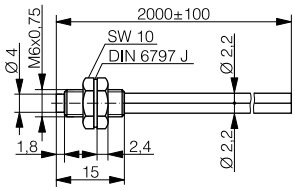

Housing size: M6	Standard	
Part reference	LFP-1002-020	
Sensing range	with series 3030	120 mm (with 2 m fiber length)
	with series 3031	60 mm (with 2 m fiber length)
	with series 3#6#	200 mm (with 2 m fiber length)
Outside fiber	1 separable double fiber, ∅ 2.2 mm	
Inner fiber	∅ 1.0 mm	
Special characteristics	Long sensing range	

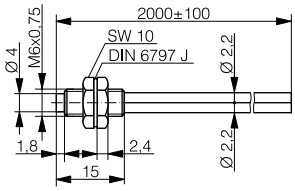

Housing size: M6	Flexible	
Part reference	LFP-1102-020	
Sensing range	with series 3030	90 mm (with 2 m fiber length)
	with series 3031	45 mm (with 2 m fiber length)
	with series 3#6#	150 mm (with 2 m fiber length)
Outside fiber	1 separable double fiber, ∅ 2.2 mm	
Inner fiber	151 x ∅ 75 µm	
Special characteristics	Very small bending radius	

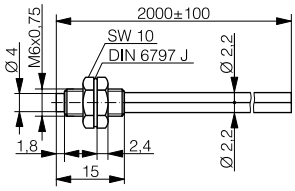

Housing size: M6	Luminous (enhanced brightness)	
Part reference	LFP-1202-020	
Sensing range	with series 3030	160 mm (with 2 m fiber length)
	with series 3031	80 mm (with 2 m fiber length)
	with series 3#6#	260 mm (with 2 m fiber length)
Outside fiber	1 separable double fiber, ∅ 2.2 mm	
Inner fiber	∅ 1.5 mm	
Special characteristics	Longest sensing range	

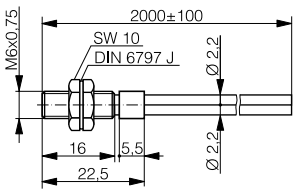

Housing size: M6	Coaxial	
Part reference	LFP-1003-020	
Sensing range	with series 3030	120 mm (with 2 m fiber length)
	with series 3031	60 mm (with 2 m fiber length)
	with series 3#6#	200 mm (with 2 m fiber length)
Outside fiber	1 separable double fiber, ∅ 2.2 mm	
Inner fiber	∅ 1.0 mm	
Special characteristics	Coaxial arrangement of fibers,	
	thus axially symmetric beam	

DIFFUSE SENSING

Dimensions: *light emission on the left*

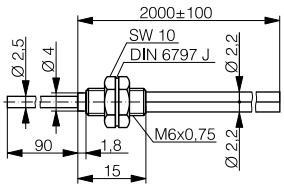

Housing size: M6	Standard	
Part reference	LFP-1005-020	
Sensing range	with series 3030	120 mm (with 2 m fiber length)
	with series 3031	60 mm (with 2 m fiber length)
	with series 3#6#	200 mm (with 2 m fiber length)
Outside fiber	1 separable double fiber, ∅ 2.2 mm	
Inner fiber	∅ 1.0 mm	
Special characteristics	Sensing head with bendable light-outlet tube for ease	
	of positioning	
	Long sensing range	

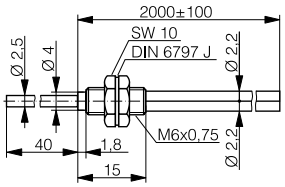

Housing size: M6	Standard	
Part reference	LFP-1013-020	
Sensing range	with series 3030	120 mm (with 2 m fiber length)
	with series 3031	60 mm (with 2 m fiber length)
	with series 3#6#	200 mm (with 2 m fiber length)
Outside fiber	1 separable double fiber, ∅ 2.2 mm	
Inner fiber	∅ 1.0 mm	
Special characteristics	Sensing head with bendable light-outlet tube for ease	
	of positioning	
	Long sensing range	

THROUGH-BEAM SENSING

Dimensions: *light emission on the left*

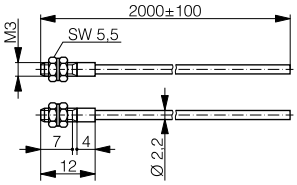

Housing size: M3	Miniature	
Part reference	LFP-2001-020	
Sensing range	with series 3030	120 mm (with 2 m fiber length)
	with series 3031	60 mm (with 2 m fiber length)
	with series 3#6#	200 mm (with 2 m fiber length)
Outside fiber	2 individual fibers, ∅ 2.2 mm	
Inner fiber	∅ 0.5 mm	
Special characteristics	Highest resolution	

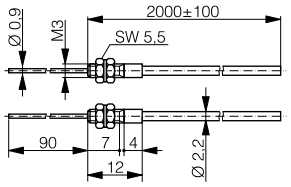

Housing size: M3	Miniature	
Part reference	LFP-2003-020	
Sensing range	with series 3030	120 mm (with 2 m fiber length)
	with series 3031	60 mm (with 2 m fiber length)
	with series 3#6#	200 mm (with 2 m fiber length)
Outside fiber	2 individual fibers, ∅ 2.2 mm	
Inner fiber	∅ 0.5 mm	
Special characteristics	Sensing head with bendable light-outlet tube for ease	
	of positioning	
	Highest resolution	

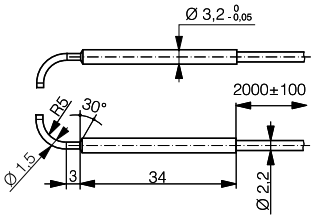

Housing size: ∅ 3.2 mm	Standard 90°	
Part reference	LFP-2006-020	
Sensing range	with series 3030	120 mm (with 2 m fiber length)
	with series 3031	60 mm (with 2 m fiber length)
	with series 3#6#	200 mm (with 2 m fiber length)
Outside fiber	2 individual fibers, ∅ 2.2 mm	
Inner fiber	∅ 1.0 mm	
Special characteristics	Lateral sensing	

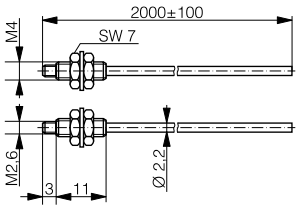

Housing size: M4	Standard	
Part reference	LFP-2002-020	
Sensing range	with series 3030	400 mm (with 2 m fiber length)
	with series 3031	200 mm (with 2 m fiber length)
	with series 3#6#	700 mm (with 2 m fiber length)
Outside fiber	2 individual fibers, ∅ 2.2 mm	
Inner fiber	∅ 1.0 mm	
Special characteristics	Long sensing range	

THROUGH-BEAM SENSING

Dimensions: *light emission on the left*

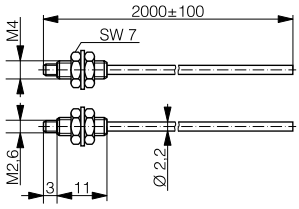

Housing size: M4	Flexible	
Part reference	LFP-2102-020	
Sensing range	with series 3030	300 mm (with 2 m fiber length)
	with series 3031	150 mm (with 2 m fiber length)
	with series 3#6#	550 mm (with 2 m fiber length)
Outside fiber	2 individual fibers, ∅ 2.2 mm	
Inner fiber	151 x ∅ 75 µm	
Special characteristics	Very small bending radius	

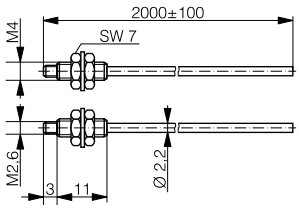

Housing size: M4	Luminous (enhanced brightness)	
Part reference	LFP-2202-020	
Sensing range	with series 3030	500 mm (with 2 m fiber length)
	with series 3031	250 mm (with 2 m fiber length)
	with series 3#6#	900 mm (with 2 m fiber length)
Outside fiber	2 individual fibers, ∅ 2.2 mm	
Inner fiber	∅ 1.5 mm	
Special characteristics	Longest sensing range	

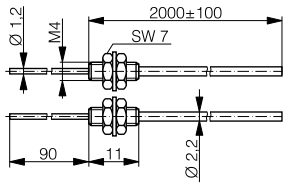

Housing size: M4	Standard	
Part reference	LFP-2004-020	
Sensing range	with series 3030	400 mm (with 2 m fiber length)
	with series 3031	200 mm (with 2 m fiber length)
	with series 3#6#	700 mm (with 2 m fiber length)
Outside fiber	2 individual fibers, ∅ 2.2 mm	
Inner fiber	∅ 1.0 mm	
Special characteristics	Sensing head with bendable light-outlet tube for ease	
	of positioning	
	Long sensing range	

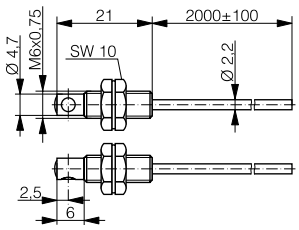

Housing size: M6	Standard 90°	
Part reference	LFP-2005-020	
Sensing range	with series 3030	1100 mm (with 2 m fiber length)
	with series 3031	550 mm (with 2 m fiber length)
	with series 3#6#	1800 mm (with 2 m fiber length)
Outside fiber	2 individual fibers, ∅ 2.2 mm	
Inner fiber	∅ 1.0 mm	
Special characteristics	Lateral sensing	
	Long sensing range	

APPLICATION-SPECIFIC CYLINDRICAL LIGHT BEAM

Dimensions: *light emission on the left*

- ✓ Diffuse fibers particularly suitable for the detection of objects in recesses and behind covers (through holes and gaps)
- ✓ Extremely small sensing heads
- ✓ Quasi-cylindrical light beam
- ✓ Recessed mounting possible
- ✓ Sapphire glass optical parts, thus easy to clean

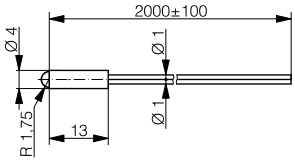

Housing size: ∅ 4 mm	Miniature / spherical optics	
Part reference	LFP-1006-020	
Sensing range	with series 3030	100 mm (with 2 m fiber length)
	with series 3031	60 mm (with 2 m fiber length)
	with series 3#6#	140 mm (with 2 m fiber length)
Outside fiber	1 separable double fiber, ∅ 1 mm*	
Inner fiber	∅ 0.5 mm	
Special characteristics	Spherical optics for cylindrical light beam	
* Adaptor included in delivery package		

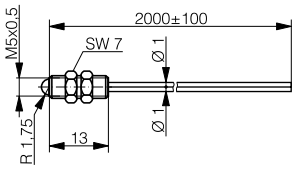

Housing size: M5	Miniature / spherical optics	
Part reference	LFP-1007-020	
Sensing range	with series 3030	100 mm (with 2 m fiber length)
	with series 3031	60 mm (with 2 m fiber length)
	with series 3#6#	140 mm (with 2 m fiber length)
Outside fiber	1 separable double fiber, ∅ 1 mm*	
Inner fiber	∅ 0.5 mm	
Special characteristics	Spherical optics for cylindrical light beam	
* Adaptor included in delivery package		

Response curves (with series 3030):

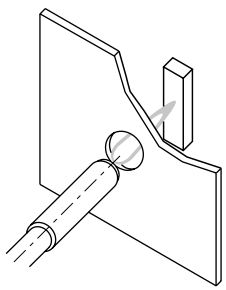

Detection through holes and gaps

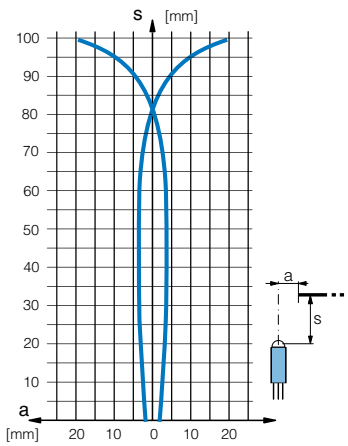

LFP-1006-020

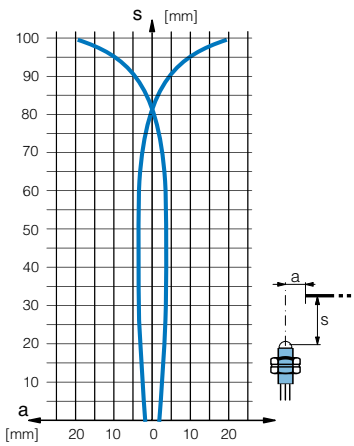

LFP-1007-020

APPLICATION-SPECIFIC MULTI-BEAM

- ✓ Multi-beam diffuse fiber
- ✓ Detection of objects across the whole width of the sensing head (28 mm)
- ✓ Suitable for rough environments, thanks to PBTP housing
- ✓ Lateral mounting

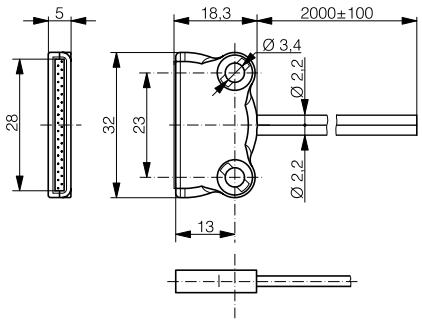

Housing size: ☐ 18 x 32	Multi-beam	
Part reference	LFP-1011-020	
Sensing range	with series 3030	90 mm (with 2 m fiber length)
	with series 3031	45 mm (with 2 m fiber length)
	with series 3#6#	150 mm (with 2 m fiber length)
Outside fiber	2 separate fibers, ∅ 2.2 mm	
Inner fiber	16 x ∅ 0.265 mm	
Special characteristics	Wide detection range (28 mm)	

Response curves (with series 3030):

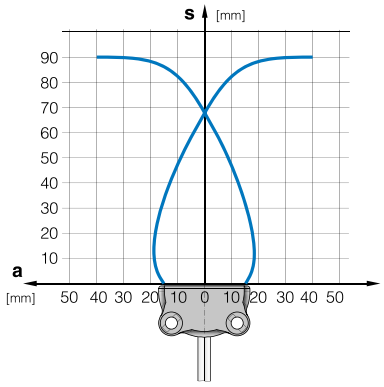

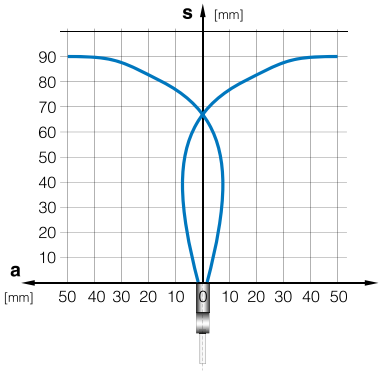

APPLICATION-SPECIFIC LIQUID LEVEL MONITORING

- ✓ Contact liquid detection (with the exception of white milky liquids)
- ✓ Fully potted optical parts
- ✓ Scratch-resistant, easy-to-clean glass prism
- ✓ Impervious (degree of protection: IP 68)

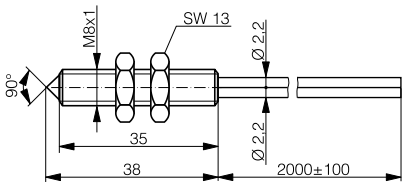

Housing size: M8	Liquid level monitoring
Part reference	LFP-1010-020
Outside fiber	2 separate fibers, ∅ 2.2 mm
Inner fiber	∅ 0.5 mm
Special characteristics	Contact liquid detection

Operating principle:

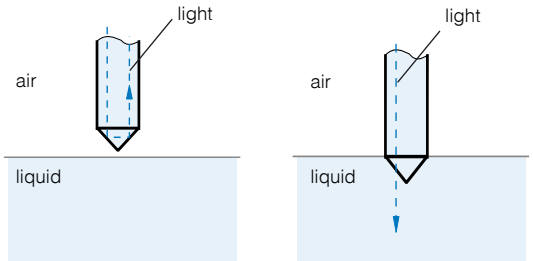

APPLICATION-SPECIFIC LOW & HIGH TEMPERATURES

Dimensions: *light emission on the left*

- ✓ Diffuse (LFP-1002-020-002) and through-beam (LFP-2002-020-002) fibers
- ✓ Extended temperature range : -55 ... +105°C / -67 ... +221°F
- ✓ Very small dimensions
- ✓ Long sensing ranges
- ✓ Small bending radii
- ✓ Can be cut on site

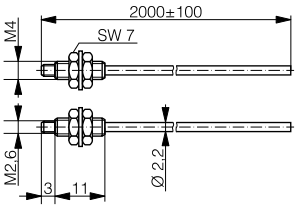

Housing size: M4	Low & high temperature resistant	
Part reference	LFP-2002-020-002	
Sensing range	with series 3030	300 mm (with 2 m fiber length)
	with series 3031	150 mm (with 2 m fiber length)
	with series 3#6#	550 mm (with 2 m fiber length)
Outside fiber	2 individual fibers, ∅ 2.2 mm	
Inner fiber	∅ 1.0 mm	
Special characteristics	Extended temperature range of -55...+105°C / -67...+221°F	

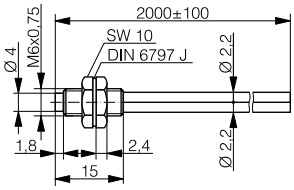

Housing size: M6	Low & high temperature resistant	
Part reference	LFP-1002-020-002	
Sensing range	with series 3030	90 mm (with 2 m fiber length)
	with series 3031	45 mm (with 2 m fiber length)
	with series 3#6#	150 mm (with 2 m fiber length)
Outside fiber	1 separable double fiber, ∅ 2.2 mm	
Inner fiber	∅ 1.0 mm	
Special characteristics	Extended temperature range of -55...+105°C / -67...+221°F	

ACCESSORIES

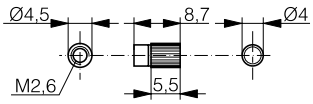

Axial front lens for increased sensing ranges		
Part reference	LFP-0001-000	
Sensing range	with series 3030	3000 mm (2 m fibers)
	with series 3031	1500 mm (2 m fibers)
	with series 3#6#	5000 mm (5 m fibers)
Can be used with	LFP-2#02-020	
Delivery package	1 pair	

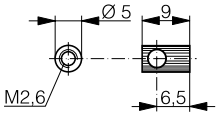

90° front lens for increased sensing ranges		
Part reference	LFP-0002-000	
Sensing range	with series 3030	1000 mm (2 m fibers)
	with series 3031	500 mm (2 m fibers)
	with series 3#6#	1700 mm (2 m fibers)
Can be used with	LFP-2#02-020	
Delivery package	1 pair	

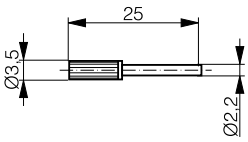

Adaptor	
Part reference	LFP-0003-000
Suitable for	fine synthetic optical fibers

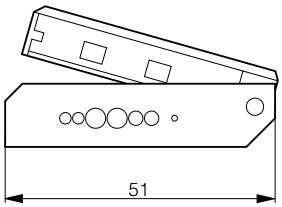

Cutting tool	
Part reference	LXF-0000-000
Suitable for	all synthetic optical fibers

UNIVERSAL MOUNTING BRACKET

For 3030 / 3031 series
Material: stainless steel V2A
Part reference: ***LXW-3030-000***

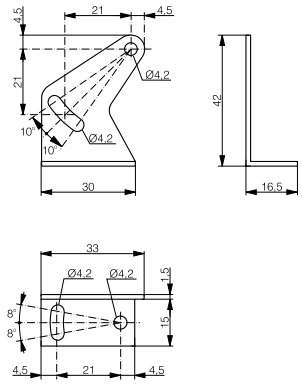

UNIVERSAL MOUNTING BRACKET

For 4040 series
Material: stainless steel V2A
Part reference: ***LXW-4040-000***

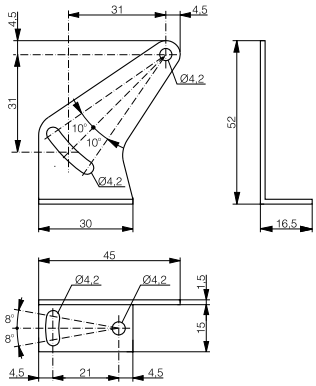

UNIVERSAL MOUNTING BRACKET

For 3#6# series
Material: stainless steel V2A
Part reference: ***LXW-3060-000***

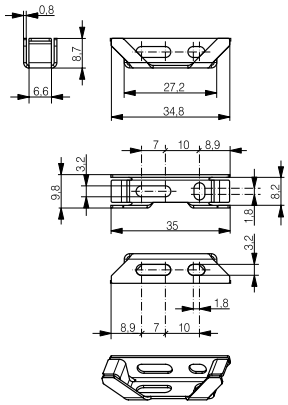

GLASS OPTICAL FIBERS

- ✓ For high ambient temperatures (models with chrome-plated brass and silicone sleeves)
- ✓ Executions for extreme environmental conditions
- ✓ Small dimensions
- ✓ Long sensing ranges
- ✓ Suitable for the detection of smallest objects
- ✓ Large selection of types

TECHNICAL DATA

Ambient temperature range	PVC sleeve	0 ... +70°C
		32 ... +158°F
	Wound brass sleeve	-25 ... +160°C
		-13 ... +320°F
	Silicone sleeve	-25 ... +150°C
		-13 ... +302°F
Protection degree of sensing head	IP 65 (optional up to IP 68)	
Protection degree of optical fiber	PVC sleeve	IP 67
	Wound brass sleeve	IP 54
	Silicone sleeve	IP 67
Standard lengths	250 mm, 500 mm, 1000 mm	
Sensing head material	Aluminum	
Sensing head light-outlet tube material	Stainless steel	
Optical attenuation	0.01 dB / m max. at 880 nm	
Angle of incidence	See data sheets	

Depending on the type involved, glass optical fibers consist of 200 to 5000 individual fibers with diameters of 30 to 50 µm. The fiber bundle is surrounded by a sleeve, which can be selected according to the application:

- PVC sleeve: the economical solution if no special stresses are to be expected.
- Wound sleeve of chrome-plated brass: for permanent operating temperatures of up to +160°C (+320°F), and maximum protection against crushing.
- Silicone sleeve with stainless-steel braiding for strain relief: for use in corrosive media, at temperatures of up to +150°C (+302°F), and where mechanical strain relief is required.

The sensing heads are available with straight or right-angle light outlets. The range comprises models for use as diffuse sensors (emitting and receiving fiber bundles in the same sleeve) and as through-beam sensors (the fiber bundles are in separate sleeves). In order to cover various application needs, a number of different bundle cross-sections are available: large cross-sections for long sensing ranges, small cross-sections for short ranges, high resolutions, and detection of small objects.

AXIAL DIFFUSE SENSING

length of glass fiber in cm, standard lengths -025 (250 mm) / -050 (500 mm) / -100 (1000 mm)

Dimensions: *light emission on the right*

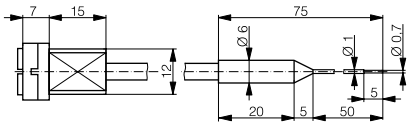

Housing size: ∅ 6 mm		
Part reference	LFG-1005-###	
Sensing range	with series 4040	5 mm
Special characteristics	With bendable light-outlet tube	
	For the detection of smallest objects	
Sleeve	Silicone, ∅ 4.7 mm	
Min. bending radius	20 mm / light-outlet tube: 5 mm	
	(do not bend the inner and outer 10 mm)	
Max. tensile load	10 N	

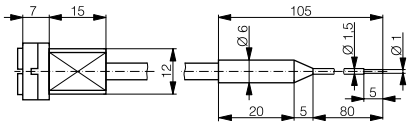

Housing size: ∅ 6 mm		
Part reference	LFG-1015-###	
Sensing range	with series 4040	15 mm
Special characteristics	With bendable light-outlet tube	
	For places difficult to access	
Sleeve	Silicone, ∅ 4.7 mm	
Min. bending radius	20 mm / light-outlet tube: 5 mm	
	(do not bend the inner and outer 10 mm)	
Max. tensile load	10 N	

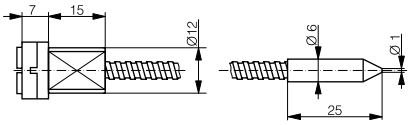

Housing size: ∅ 6 mm		
Part reference	LFG-1010-###	
Sensing range	with series 4040	15 mm
Special characteristics	For the detection of smallest objects	
	in places difficult to access	
Sleeve	Wound sleeve of chrome-plated brass, ∅ 4.7 mm	
Min. bending radius	23 mm	
Max. tensile load	20 N	

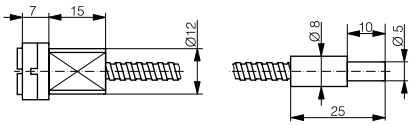

Housing size: ∅ 8 mm		
Part reference	LFG-1020-###	
Sensing range	with series 4040	50 mm
Special characteristics	Multi-purpose medium sensing range model	
Sleeve	Wound sleeve of chrome-plated brass, ∅ 4.7 mm	
Min. bending radius	25 mm	
Max. tensile load	50 N	

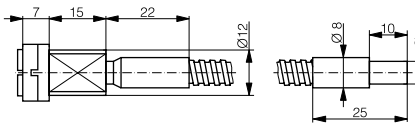

Housing size: ∅ 8 mm		
Part reference	LFG-1030-###	
Sensing range	with series 4040	150 mm
Special characteristics	For long sensing range	
Sleeve	Wound sleeve of chrome-plated brass, ∅ 6.7 mm	
Min. bending radius	25 mm	
Max. tensile load	50 N	

RADIAL DIFFUSE SENSING

length of glass fiber in cm, standard lengths -025 (250 mm) / -050 (500 mm) / -100 (1000 mm)

Dimensions: *light emission on the right*

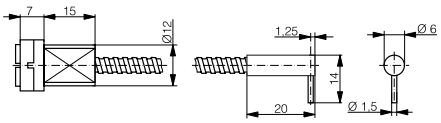

Housing size: ∅ 6 mm	
Part reference	LFG-2010-###
Sensing range	with series 4040 15 mm
Special characteristics	For the detection of smallest objects
	in places difficult to access
Leg length	14 mm
Sleeve	Wound sleeve of chrome-plated brass, ∅ 4.7 mm
Min. bending radius	23 mm
Max. tensile load	20 N

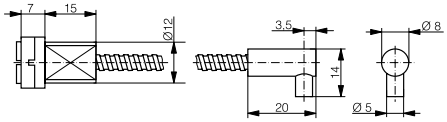

Housing size: ∅ 8 mm	
Part reference	LFG-2020-###
Sensing range	with series 4040 30 mm
Special characteristics	Multi-purpose medium sensing range model
Leg length	14 mm
Sleeve	Wound sleeve of chrome-plated brass, ∅ 4.7 mm
Min. bending radius	25 mm
Max. tensile load	50 N

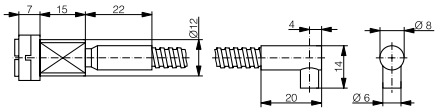

Housing size: ∅ 8 mm	
Part reference	LFG-2030-###
Sensing range	with series 4040 150 mm
Special characteristics	For long sensing range
Leg length	14 mm
Sleeve	Wound sleeve of chrome-plated brass, ∅ 6.7 mm
Min. bending radius	25 mm
Max. tensile load	50 N

AXIAL THROUGH-BEAM SENSING

length of glass fiber in cm, standard lengths -025 (250 mm) / -050 (500 mm) / -100 (1000 mm)

Dimensions: *light emission on the right*

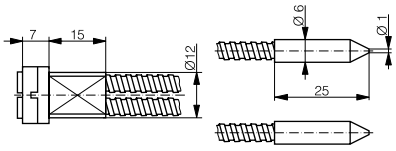

Housing size: ∅ 6 mm		
Part reference	LFG-3010-050	
Sensing range	with series 4040	200 mm
Special characteristics	For the detection of smallest objects	
	in places difficult to access	
Sleeve	Wound sleeve of chrome-plated brass, ∅ 4.7 mm	
Min. bending radius	23 mm	
Max. tensile load	20 N	

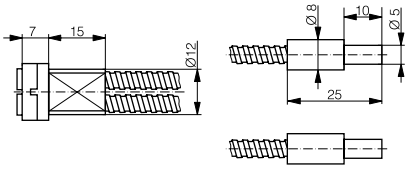

Housing size: ∅ 8 mm		
Part reference	LFG-3020-050	
Sensing range	with series 4040	800 mm
Special characteristics	Multi-purpose medium sensing range model	
Sleeve	Wound sleeve of chrome-plated brass, ∅ 4.7 mm	
Min. bending radius	25 mm	
Max. tensile load	50 N	

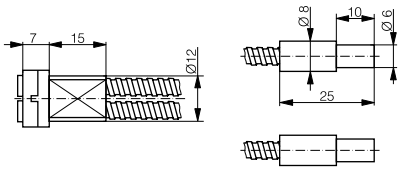

Housing size: ∅ 8 mm		
Part reference	LFG-3030-###	
Sensing range	with series 4040	1500 mm
Special characteristics	For long sensing range	
Sleeve	Wound sleeve of chrome-plated brass, ∅ 4.7 mm	
Min. bending radius	25 mm	
Max. tensile load	50 N	

RADIAL THROUGH-BEAM SENSING

length of glass fiber in cm, standard lengths -025 (250 mm) / -050 (500 mm) / -100 (1000 mm)

Dimensions: *light emission on the right*

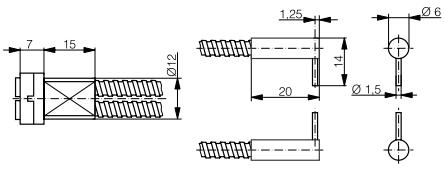

Housing size: ∅ 6 mm	
Part reference	LFG-4010-###
Sensing range	with series 4040 200 mm
Special characteristics	For the detection of smallest objects
	in places difficult to access
Leg length	14 mm
Sleeve	Wound sleeve of chrome-plated brass, ∅ 4.7 mm
Min. bending radius	23 mm
Max. tensile load	20 N

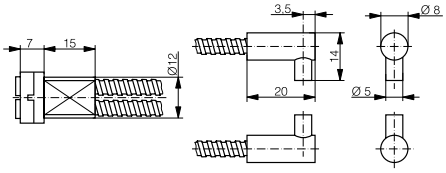

Housing size: ∅ 8 mm	
Part reference	LFG-4020-###
Sensing range	with series 4040 800 mm
Special characteristics	Multi-purpose medium sensing range model
Leg length	14 mm
Sleeve	Wound sleeve of chrome-plated brass, ∅ 4.7 mm
Min. bending radius	25 mm
Max. tensile load	50 N

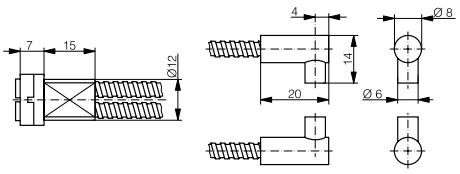

Housing size: ∅ 8 mm	
Part reference	LFG-4030-100
Sensing range	with series 4040 1500 mm
Special characteristics	For long sensing range
Leg length	14 mm
Sleeve	Wound sleeve of chrome-plated brass, ∅ 4.7 mm
Min. bending radius	25 mm
Max. tensile load	50 N

Dimensions: *light emission on the right*

for series 3030 / 3031 sensors (connection as with synthetic fibers)

Housing size: M6	Diffuse sensing	
Part reference	LFG-1022-050	
Sensing range	with series 3030	120 mm
	with series 3031	60 mm
Special characteristics	For difficult environmental conditions	
Sleeve	Wound sleeve of chrome-plated brass, ∅ 4.6 mm	
Min. bending radius	25 mm	
Max. tensile load	20 N	

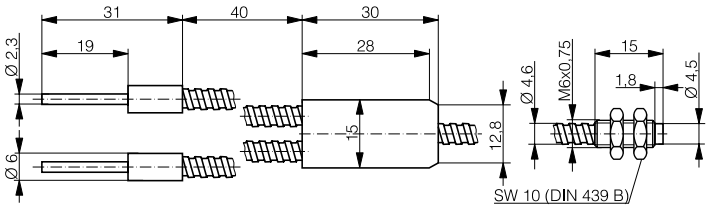

Housing size: M4	Through-beam sensing	
Part reference	LFG-3022-050	
Sensing range	with series 3030	500 mm
	with series 3031	250 mm
Special characteristics	For difficult environmental conditions	
Sleeve	Wound sleeve of chrome-plated brass, ∅ 4.6 mm	
Min. bending radius	25 mm	
Max. tensile load	20 N	

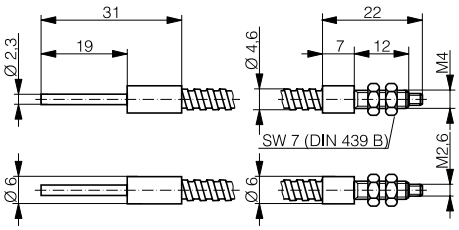

ACCESSORIES

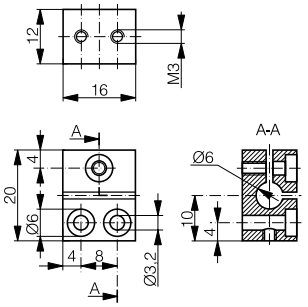

For ∅ 6 mm heads	Fiber mounting clamp
Part reference	LXG-0000-060
Characteristics	Mounting clamp for axial and radial light-outlet tubes
Material	Nickel-plated brass
Suitable for the following fibers	LFG-1005-### / LFG-1015-###
	LFG-1010-### / LFG-2010-###
	LFG-3010-### / LFG-4010-###

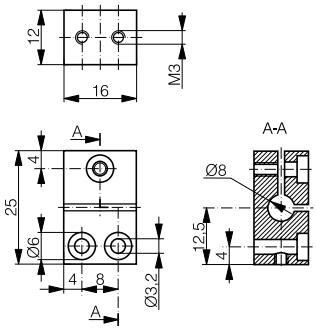

For ∅ 8 mm heads	Fiber mounting clamp
Part reference	LXG-0000-080
Characteristics	Mounting clamp for axial and radial light-outlet tubes
Material	Nickel-plated brass
Suitable for the following fibers	LFG-1020-### / LFG-1030-###
	LFG-2020-### / LFG-2030-###
	LFG-3020-### / LFG-3030-###
	LFG-4020-### / LFG-4030-###


CONTRINEX
DW-AD-703-C23
Sn 7 mm
PNP NO 638718 A
IO-Link
CONTRINEX
DW-AS-612

HIGH PRECISION AND DIRECT DIGITAL TRANSMISSION

DISTANCE

PHOTOELECTRIC SENSORS

KEY ADVANTAGES

C23 Distance measuring sensors

- ✓ Two distance measurement ranges: 20…80 mm and 30…200 mm
- ✓ Housing 20 mm x 34 mm x 12 mm
- ✓ High precision and repeatability
- ✓ Settable analog range for optimum distance measurement
- ✓ Enclosure rating IP 67 / IP 69K

C55 distance measuring sensors

- ✓ Distance measurement up to 5000 mm
- ✓ Housing 50 mm x 50 mm x 23 mm
- ✓ High precision and repeatability
- ✓ Settable analog range for optimum distance measurement
- ✓ Enclosure rating IP 67 / IP 69K, Ecolab approved
- ✓ IO-Link

RANGE OVERVIEW	Series	Short range	Medium range
DISTANCE	C23 (20x34x12)	p. 282-283	
	C55 (50x50x23)		p. 284-285

DISTANCE
C23

PHOTOELECTRIC SENSORS

ADVANTAGES

- ✓ Two distance measurement ranges: 20…80 mm and 30…200 mm
- ✓ Housing 20 mm x 34 mm x 12 mm
- ✓ High precision and repeatability
- ✓ Settable analog range for optimum distance measurement
- ✓ Enclosure rating IP 67 / IP 69K

WIRING DIAGRAM

PNP or NPN + analog, 2 outputs

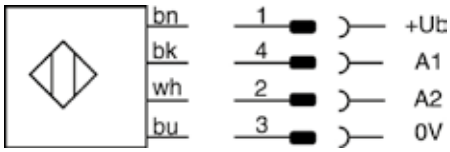

OVERVIEW	C23 DISTANCE
Housing material	ABS / PMMA
Degree of protection	IP 67 / IP 69K
Supply voltage range	13 ... 30 VDC
Ambient temperature range	-20 ... +60°C / -4 ... +140°F
Output current	≤ 100 mA
Switching frequency	≤ 1000 Hz
Setup	Teach button
Compatible mounting bracket	See pages 297-298

C23 SERIES

HOUSING SIZE MM	☐ 20 X 34 X 12	☐ 20 X 34 X 12	☐ 20 X 34 X 12
OPERATING PRINCIPLE	DISTANCE MEASURING SENSOR	DISTANCE MEASURING SENSOR	DISTANCE MEASURING SENSOR
SENSING RANGE MM	80	100	200

PHOTOELECTRIC

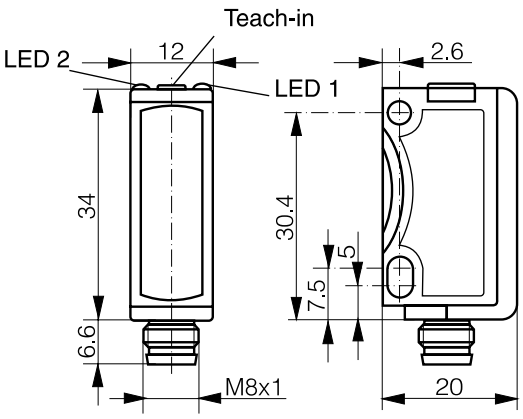

DATA			
Light source	LED red 632 nm	Laser class 1, red 650 nm	LED red 632 nm
Light spot size	5 mm at 50 mm	1.5 mm at 80 mm	7 mm at 60 mm
Resolution	0.12 mm	0.12 mm	0.68 mm
Linearity	+/- 0.4 mm	+/- 0.25 mm	+/- 2 mm
Repeatability	≤ 0.4 mm	≤ 0.25 mm	≤ 1 mm
PNP Light-ON+Dark-ON+Analog 1...10V	**DTR-C23PB-TMS-139**		**DTR-C23PB-TLS-139**
NPN Light-ON+Dark-ON+Analog 1...10V	**DTR-C23PB-TMS-129**		**DTR-C23PB-TLS-129**
PNP/NPN auto-detect+Analog 1...10V		**DTL-C23PB-TMS-139-501**	
Other types available			

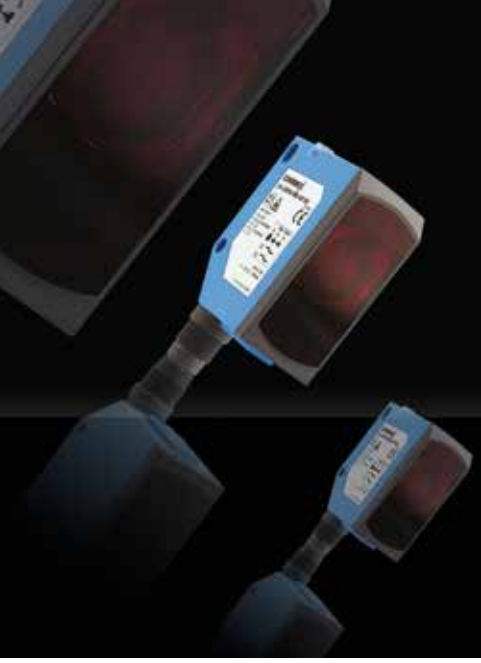

DISTANCE
C55

PHOTOELECTRIC SENSORS

ADVANTAGES

- ✓ Distance measurement up to 5000 mm
- ✓ Housing 50 mm x 50 mm x 23 mm
- ✓ High precision and repeatability
- ✓ Settable analog range for optimum distance measurement
- ✓ Enclosure rating IP67/IP69K, Ecolab approved
- ✓ IO-Link

WIRING DIAGRAMS

PNP / NPN auto-detect + analog, 2 outputs + teach-in

PNP / NPN auto-detect, 1 output + teach-in

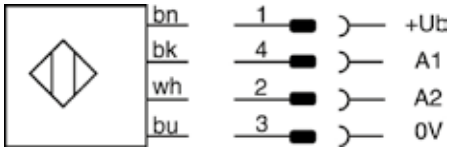

OVERVIEW	C55 DISTANCE
Housing material	ABS / PMMA
Degree of protection	IP 67 / IP 69K
Supply voltage range	18 ... 30 VDC
Ambient temperature range	-40 ... +60°C / -40 ... +140°F
Output current	≤ 100 mA
Switching frequency	≤ 250 Hz (DTL) / ≤ 500 Hz (-505)
Setup	Teach button / or IO-Link (-505)
Compatible mounting bracket	See page 299

C55 SERIES

HOUSING SIZE MM	☐ 50 X 50 X 23	☐ 50 X 50 X 23
OPERATING PRINCIPLE	DISTANCE MEASURING SENSOR	DISTANCE MEASURING SENSOR
SENSING RANGE MM	5000	5000

PHOTOELECTRIC

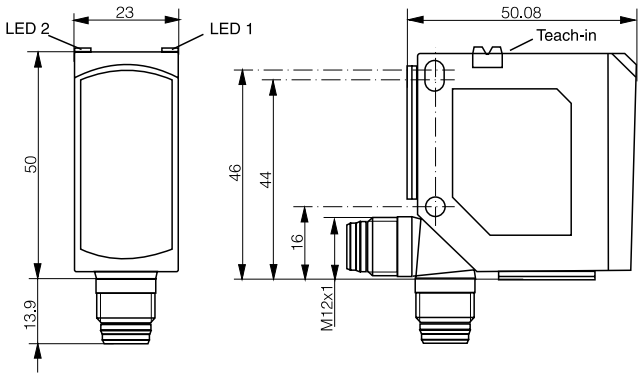

DATA		IO-Link
Light source	Laser class 1 red 650 nm	Laser class 1 red 655 nm
Light spot size	5 mm x 4 mm at 3000 mm	5 mm x 4 mm at 3000 mm
Resolution	< 5 mm	< 5 mm
Linearity	+/- 30 mm	+/- 30 mm
PNP/NPN auto-detect + Analog 4 ... 20 mA	**DTL-C55PA-TMS-119-502**	
PNP/NPN auto-detect + Analog 0 ... 10 V	**DTL-C55PA-TMS-119-503**	
PNP/NPN auto-detect, Light-ON / Dark-ON		**DTL-C55PA-TMS-407-505**
Other types available		


CONTRINEX

EXCELLENT RESOLUTION FOR SMALLEST VARIATIONS

COLOR AND CONTRAST

PHOTOELECTRIC SENSORS

KEY ADVANTAGES

- ✓ Rugged housing, 40 mm x 50 mm x 15 mm
- ✓ Connector adjustable at 0°, 45° and 90°
- ✓ 5 switching tolerance levels

Color sensors

- ✓ 3 color teach channels with independent outputs
- ✓ High positioning tolerance
- ✓ High switching frequency: up to 4 kHz

Contrast sensors

- ✓ Detection of very small print marks thanks to a narrow, collimated light spot
- ✓ RGB emission technology with best emission color automatically selected
- ✓ IO-Link

RANGE OVERVIEW	Series	Color	Contrast
COLOR AND CONTRAST	4050 (40x50x15)	p. 289	p. 289

COLOR AND CONTRAST

4050

PHOTOELECTRIC SENSORS

ADVANTAGES

- ✓ Rugged housing, 40 mm x 50 mm x 15 mm
- ✓ Connector adjustable at 0°, 45° and 90°
- ✓ 5 switching tolerance levels

Color sensors

- ✓ 3 color teach channels with independent outputs
- ✓ High positioning tolerance
- ✓ High switching frequency: up to 4 kHz

Contrast sensors

- ✓ Detection of very small print marks thanks to a narrow, collimated light spot
- ✓ RGB emission technology with best emission color automatically selected
- ✓ Excellent tolerance to target distance variations
- ✓ High switching frequency: up to 10 kHz
- ✓ IO-Link

WIRING DIAGRAMS

PNP or NPN, 3 outputs

PUSH-PULL, 1 output + teach or switching mode selector

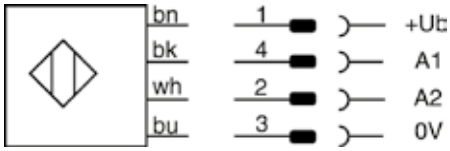

OVERVIEW	4050 COLOR	4050 CONTRAST
Housing material	PBTP	PBTP
Degree of protection	IP 67	IP 67
Supply voltage range	10 ... 30 VDC	10 ... 30 VDC
Ambient temperature range	-5 ... +55°C / 23 ... +131°F	-5 ... +55°C / 23 ... +131°F
Output current	≤ 200 mA	≤ 100 mA
Switching frequency	4000 Hz	10,000 Hz
Compatible mounting bracket	See page 302	See page 302

4050 SERIES

HOUSING SIZE MM	40 X 50 X 15	40 X 50 X 15
OPERATING PRINCIPLE	COLOR SENSOR (DIFFUSE)	CONTRAST SENSOR (DIFFUSE)
SENSING RANGE MM	40	12

PHOTOELECTRIC

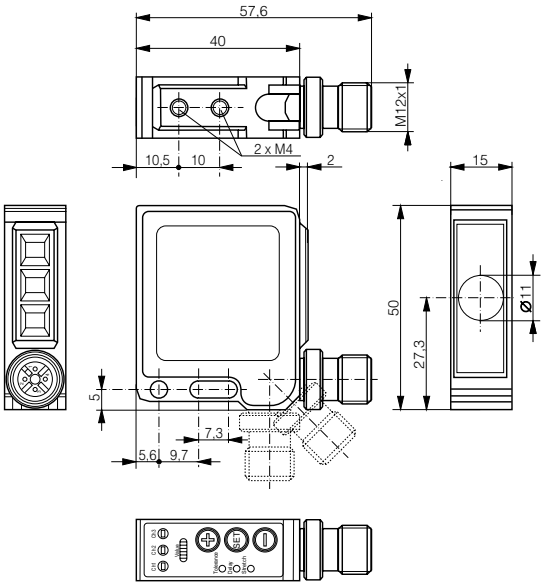

DATA		IO-Link
Light source	LED white	LED red, green, blue (autoselect)
Light spot size (distance)	Ø 4 mm (35 mm)	1.5 x 3.5 mm (12 mm)
No-load supply current	≤ 35 mA	≤ 35 mA
Setup	Teach button	Teach button or Teach input or IO-Link
3 x PNP Light-ON	**FTS-4155-303**	
3 x NPN Light-ON	**FTS-4155-301**	
PUSH-PULL		**KTS-4155-407**
Other types available	Cable version	Cable version

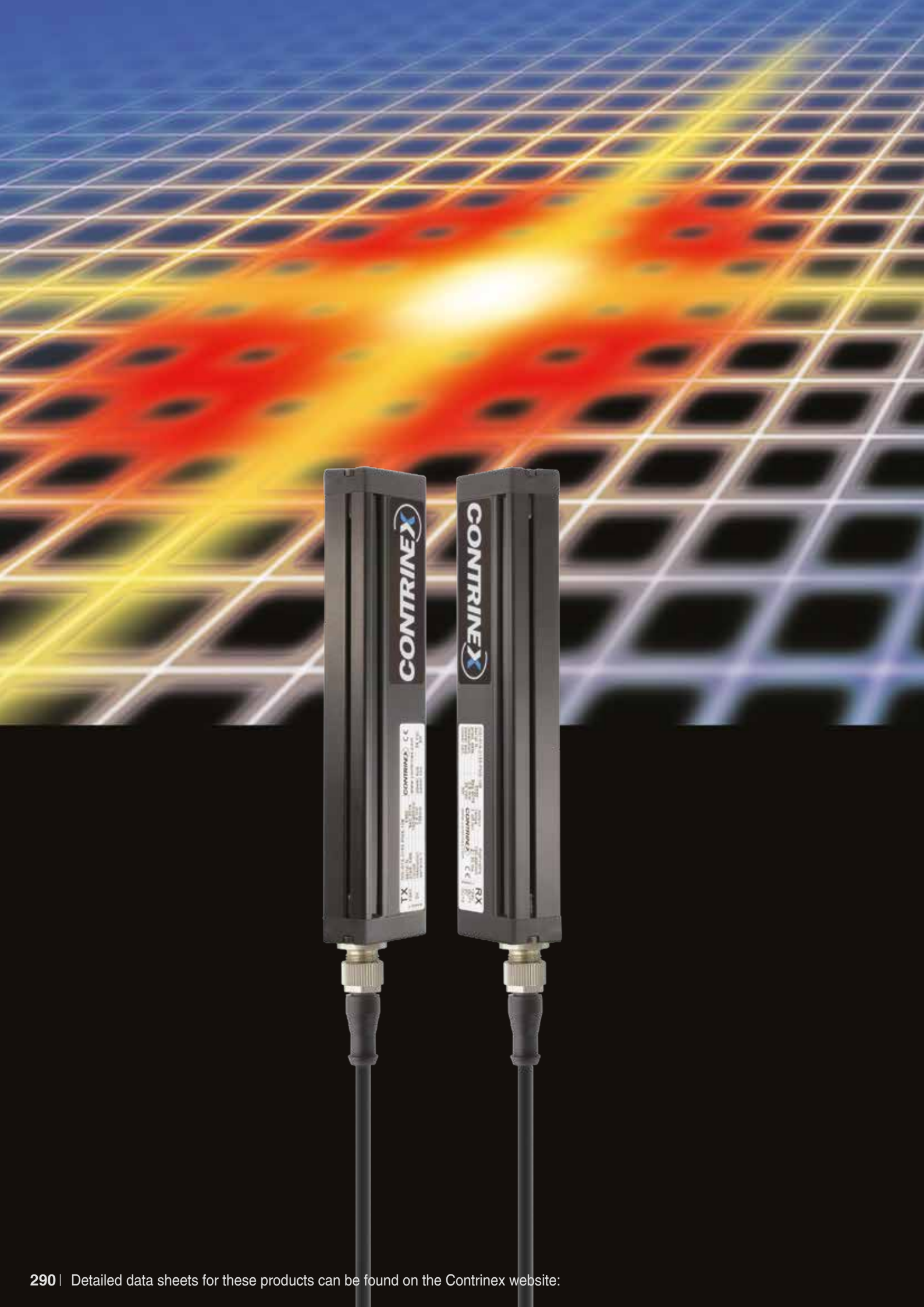
CONTRINEX
TX
CONTRINEX
RX

LIGHT GRIDS

PHOTOELECTRIC SENSORS

KEY ADVANTAGES

- ✓ Plug-and-play installation
- ✓ Small installation space with cross-section: 40 x 20.5 mm

DGI series

- ✓ Fast, precise detection and counting
- ✓ Resolution of 0.9 mm to 25 mm, capable of detecting even the smallest object
- ✓ Detection range up to 8000 mm
- ✓ Beam height from 75 mm up to 2010 mm

MGI series

- ✓ Easy, reliable measurement of position and dimensions
- ✓ Center beam spacing 5 mm and 12 mm
- ✓ Measurement range up to 4000 mm
- ✓ Beam height from 230 mm up to 1420 mm

RANGE OVERVIEW	Series	Detection	Measurement
LIGHT GRIDS	DGI (40x20.5xH)	p. 293	
	MGI (40x20.5xH)		p. 295

LIGHT GRIDS
DETECTION

PHOTOELECTRIC SENSORS

ADVANTAGES

- ✓ Compact aluminum housing (40 mm x 20.5 mm x height)
- ✓ Resolution of 0.9 mm to 25 mm, capable of detecting even the smallest object
- ✓ Detection range up to 8000 mm
- ✓ Beam height from 75 mm up to 2010 mm
- ✓ 2 push-pull outputs (PNP + NPN), Light-ON + Dark-ON
- ✓ Fast response time from 0.8 to 4.8 ms
- ✓ Potentiometer for fine adjustment on 0.9 mm and 2 mm resolution grids

WIRING DIAGRAM

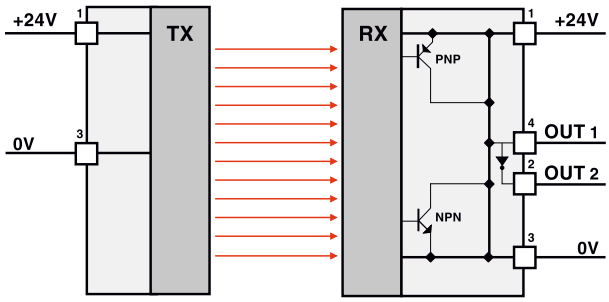

OVERVIEW	DETECTION GRID
Housing material	Aluminum
Window material	PMMA
Degree of protection	IP 65
Light source	LED, infrared
Supply voltage range	24 VDC ± 20 %
Ambient temperature range	-5 ... +50°C / +23 ... +122°F
Output current	≤ 80 mA
Compatible mounting bracket	See page 299

DETECTION GRID

HOUSING SIZE MM	40 X 20.5 X H
OPERATING PRINCIPLE	DETECTION GRID
SENSING RANGE MM	8000

PHOTOELECTRIC

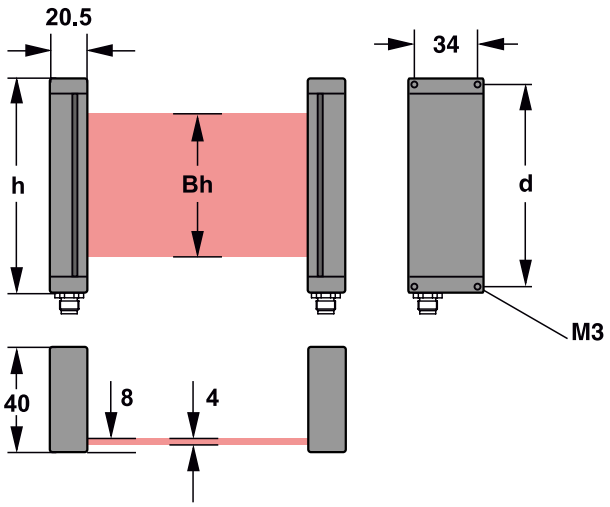

AVAILABLE TYPES

PART REFERENCE	RESOLUTION (MM)	HEIGHT h (MM)	BEAM HEIGHT Bh (MM)	DETECTION RANGE (MM)	POTENTIO-METER
DGI-01A-0075-PMS-107	0.9	100	75	100...400	✓
DGI-01A-0155-PMS-107	0.9	180	155	150...400	✓
DGI-02A-0075-PMS-107	2	100	75	80...800	✓
DGI-02A-0155-PMS-107	2	180	155	150...800	✓
DGI-04A-0075-NMS-107	4	100	75	80...800	-
DGI-04A-0155-NMS-107	4	180	155	150...800	-
DGI-08A-0190-NMS-107	8	212	190	300...4000	-
DGI-08A-0480-NMS-107	8	500	480	300...4000	-
DGI-25A-0480-NMS-107	25	500	480	300...8000	-
DGI-25A-0960-NMS-107	25	980	960	300...8000	-
DGI-25A-2010-NMS-107	25	2036	2010	300...8000	-

LIGHT GRIDS
MEASUREMENT

PHOTOELECTRIC SENSORS

ADVANTAGES

- ✓ Compact aluminum housing (40 mm x 20.5 mm x height)
- ✓ Center beam spacing 5 mm and 12 mm
- ✓ Measurement range up to 4000 mm
- ✓ Beam height from 230 mm up to 1420 mm
- ✓ Analog output 0-10 V or 4-20 mA
- ✓ Fast response time from 3 to 14 ms
- ✓ 4 switching modes selectable through multi-switch

WIRING DIAGRAM

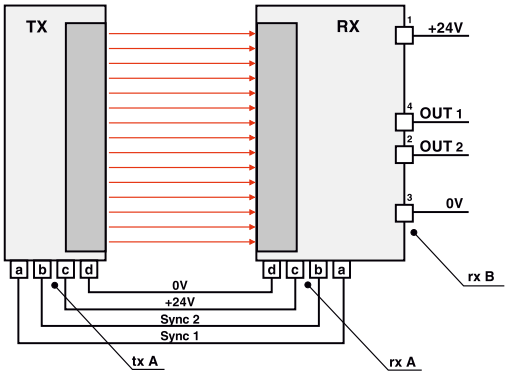

OVERVIEW	MEASUREMENT GRID
Housing material	Aluminum
Window material	PMMA
Degree of protection	IP 65
Light source	LED, infrared
Supply voltage range	24 VDC ± 20 %
Ambient temperature range	-5 ... +50°C / +23 ... +122°F
Analog output	4 ... 20 mA / 0 ... 10 V
Compatible mounting bracket	See page 299

MEASUREMENT GRID

HOUSING SIZE MM	40 X 20.5 X H
OPERATING PRINCIPLE	MEASUREMENT GRID
SENSING RANGE MM	4000

PHOTOELECTRIC

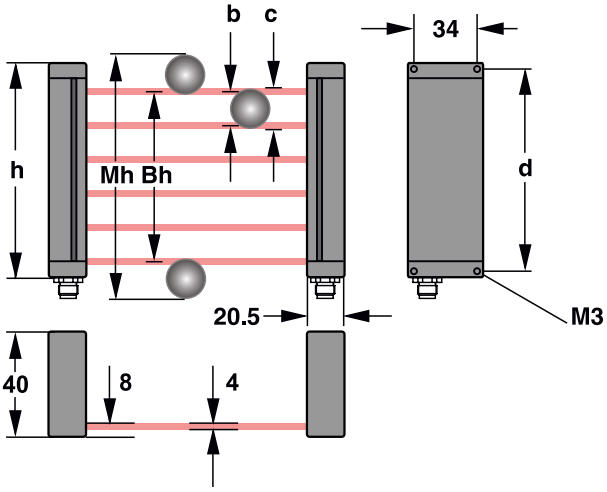

AVAILABLE TYPES

PART REFERENCE	CENTER BEAMS SPACING b (MM)	HEIGHT h (MM)	BEAM HEIGHT Bh (MM)	MEASUREMENT HEIGHT Mh (MM)
MGI-05A-0232-NMS-149	5	260	232	240
MGI-05A-0472-NMS-149	5	500	472	480
MGI-05A-0952-NMS-149	5	980	952	960
MGI-12A-0458-NMS-149	12	500	458	478
MGI-12A-0938-NMS-149	12	980	938	958
MGI-12A-1418-NMS-149	12	1460	1418	1438

UNIVERSAL MOUNTING BRACKET

For C23PA series
Material: stainless steel V2A
Part reference: **LXW-C23PA-000**

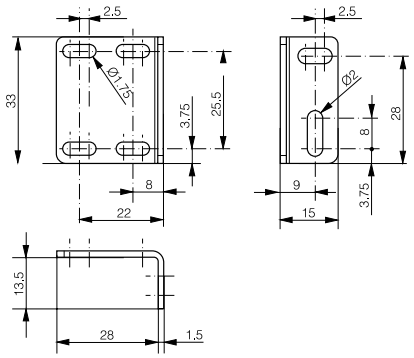

UNIVERSAL MOUNTING BRACKET

For C23PA series
Material: stainless steel V2A
Part reference: **LXW-C23PA-001**

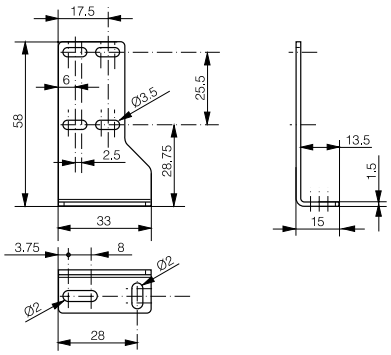

UNIVERSAL MOUNTING BRACKET

For C23PA series
Material: stainless steel V2A
Part reference: **LXW-C23PA-002**

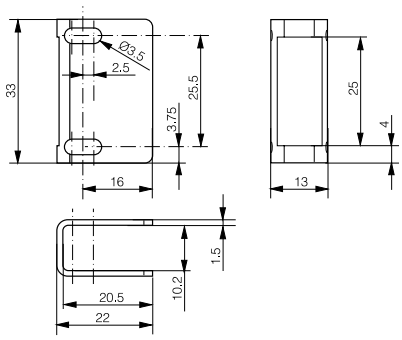

UNIVERSAL MOUNTING BRACKET

For C23PA series
Material: stainless steel V2A
Part reference: **LXW-C23PA-003**

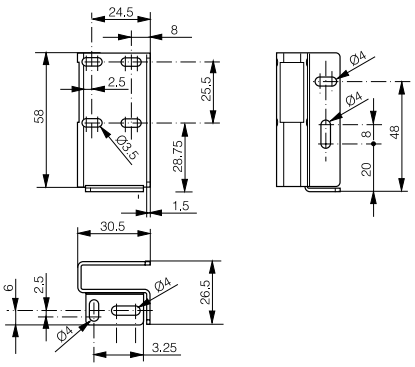

UNIVERSAL MOUNTING BRACKET

For C23PB distance sensors
Material: aluminum anodised
Part reference: **LXW-C23PB-000**

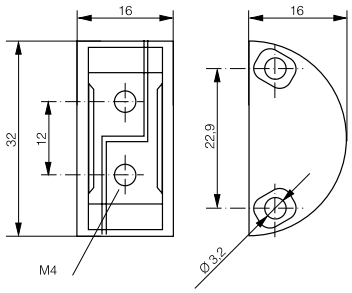

UNIVERSAL MOUNTING BRACKET

For C23PB distance sensors
Material: aluminum
Part reference: **LXW-C23PB-001**

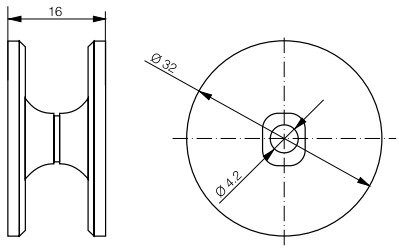

UNIVERSAL MOUNTING BRACKET

For C23PB distance sensors
Material: stainless steel V2A
Part reference: **LXW-C23PB-002**

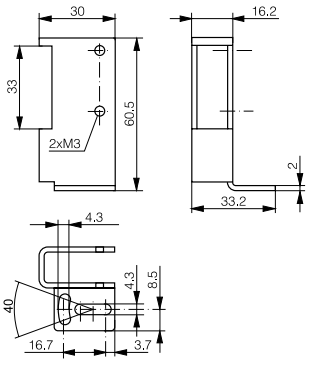

UNIVERSAL MOUNTING BRACKET

For C23PB distance sensors
Material: stainless steel V2A
Part reference: **LXW-C23PB-003**

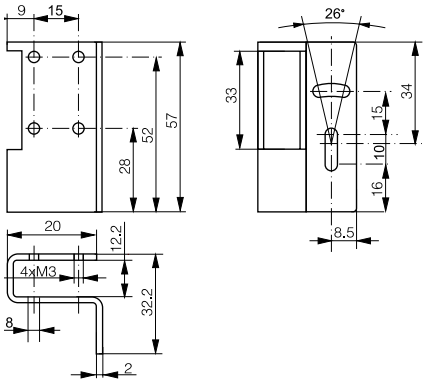

UNIVERSAL MOUNTING BRACKET

For C23PB distance sensors
Material: nickel-plated steel
Part reference: **LXW-C23PB-004**

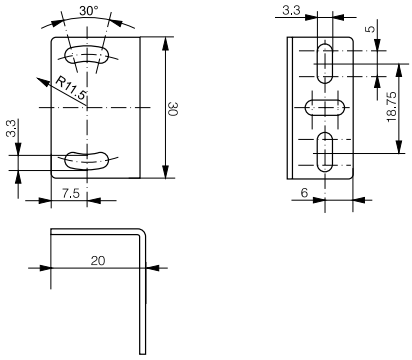

UNIVERSAL MOUNTING BRACKET

For C55 series
Material: stainless steel V2A
Part reference: **LXW-C55PA-000**

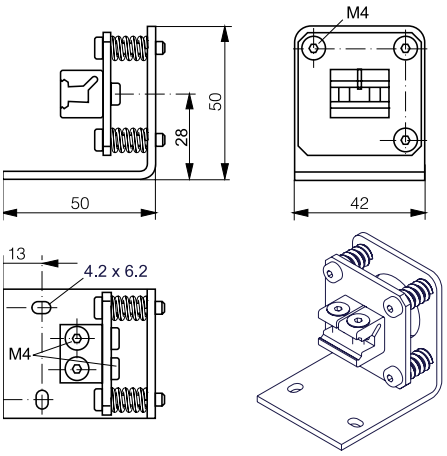

UNIVERSAL MOUNTING BRACKET

For light grids
Material: stainless steel V2A
Part reference: **LXW-DGMGA-000**

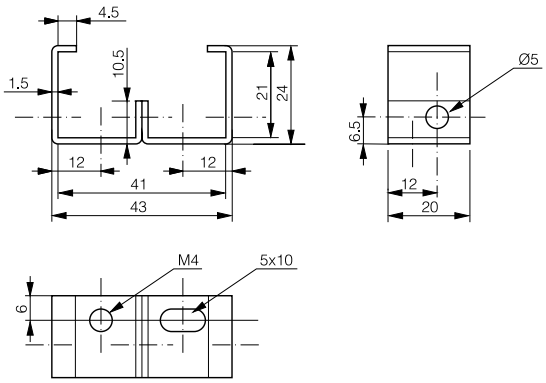

UNIVERSAL MOUNTING BRACKET

For M18PA series
Material: ABS
Part reference: **LXW-M18PA-000**

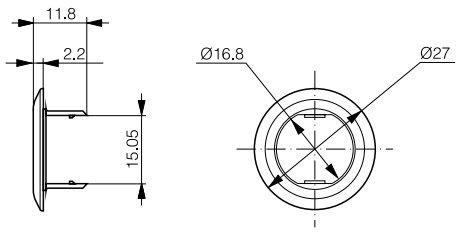

UNIVERSAL MOUNTING BRACKET

For M18PA series
Material: ABS
Part reference: **LXW-M18PA-001**

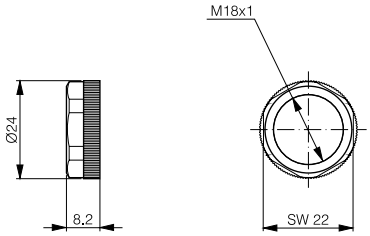

SPECIAL MOUNTING FOR 90º

For M18PA series
Material: ABS / PMMA
Part reference: **LHW-M18PA-000**

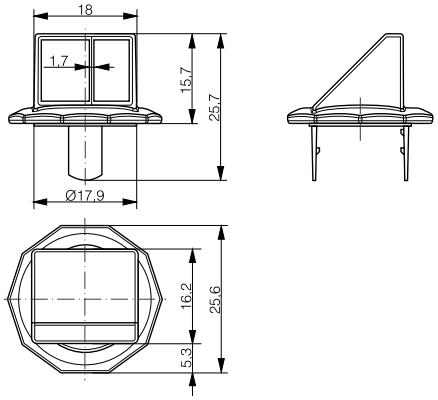

SPECIAL MOUNTING FOR 90º

For M18PA series
Material: ABS / PMMA
Part reference: **LLW-M18PA-000**

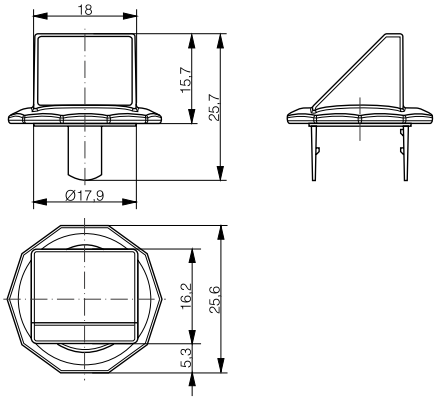

SPECIAL MOUNTING FOR 90º

For M18PA series
Material: ABS / PMMA
Part reference: **LTW-M18PA-000**

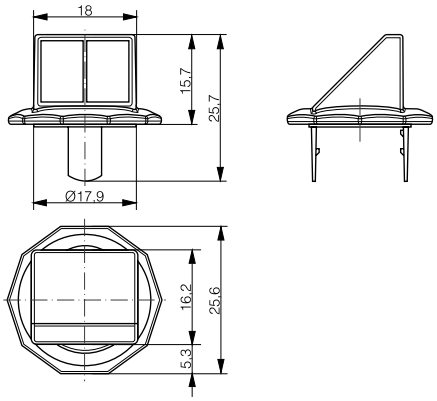

UNIVERSAL MOUNTING BRACKET

For 3#30 / 3#31 series
Material: stainless steel V2A
Part reference: **LXW-3030-000**

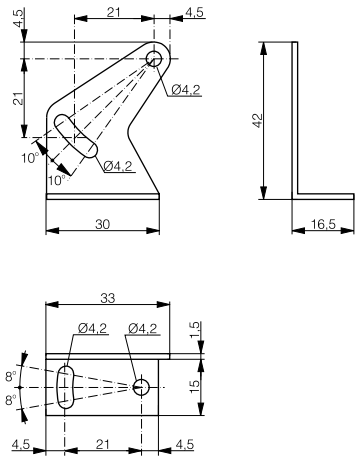

DIN-RAIL MOUNTING BRACKET

(TS35) for 3#30 / 3#31 series
Material: stainless steel V2A
Part reference: **LXW-3030-001**

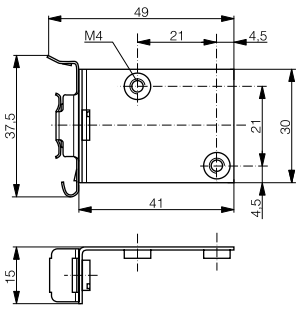

UNIVERSAL MOUNTING BRACKET

For 4050 series
Material: stainless steel V2A
Part reference: **LXW-4050-000**

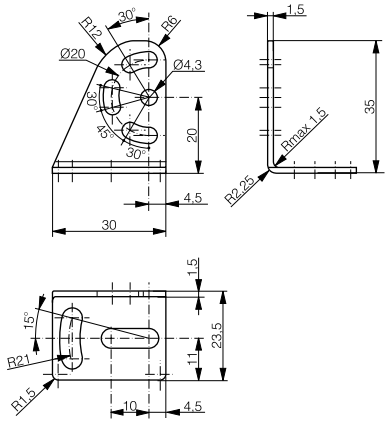

CLAMP BRACKET

For 4050 series
Material: aluminum
Part reference: **LXW-4050-002**

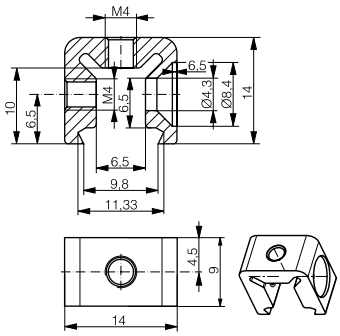

REFLECTOR Ø 26 MM

Part reference: **LXR-0000-025**

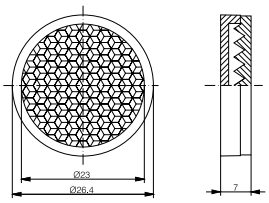

REFLECTOR Ø 46 MM

Part reference: **LXR-0000-046**

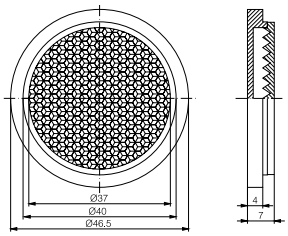

REFLECTOR Ø 82 MM

Part reference: **LXR-0000-084**

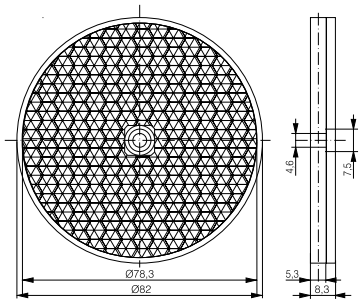

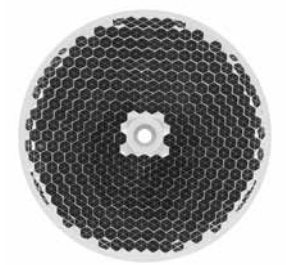

REFLECTOR 32 X 20 MM

Part reference: **LXR-0001-032**

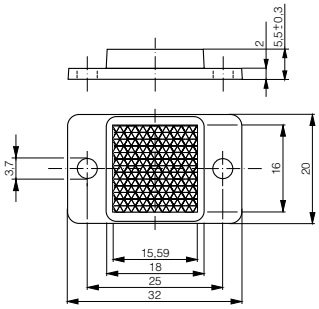

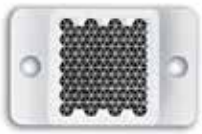

REFLECTOR 60 X 20 MM

Part reference: **LXR-0001-062**

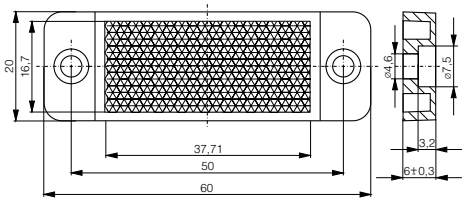

REFLECTOR 60 X 51 MM

Part reference: **LXR-0001-065**

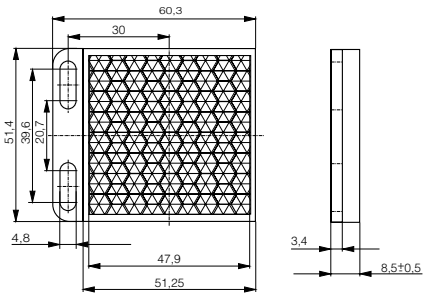

REFLECTOR 60 X 41 MM

Part reference: **LXR-0001-064**

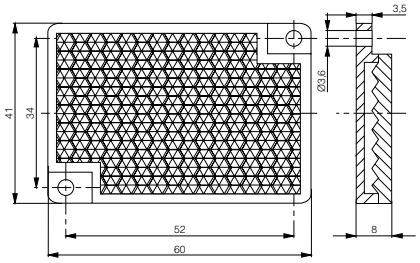

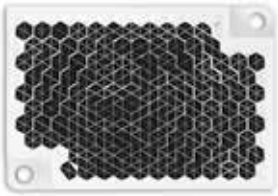

REFLECTOR 85 X 85 MM

Part reference: **LXR-0001-088**

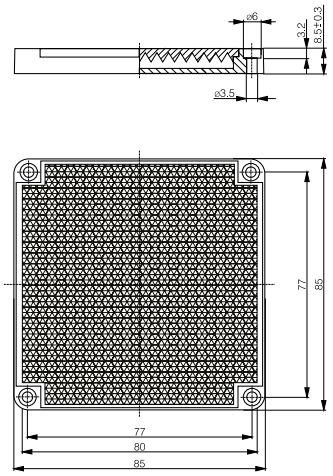

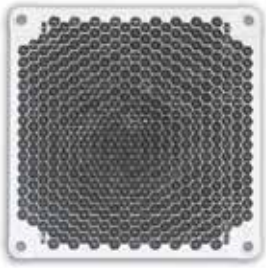

REFLECTOR Ø 26 MM FOR UV

Part reference: **LXU-0000-025**

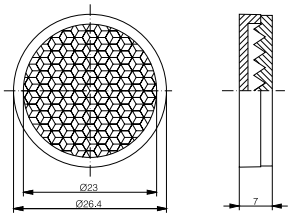

REFLECTOR Ø 82 MM FOR UV

Part reference: **LXU-0000-084**

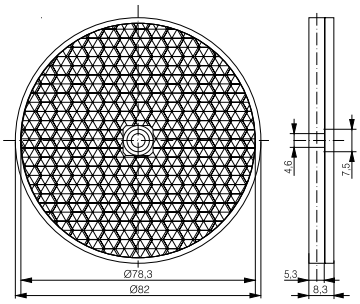

REFLECTOR 32 X 20 MM FOR UV

Part reference: **LXU-0001-032**

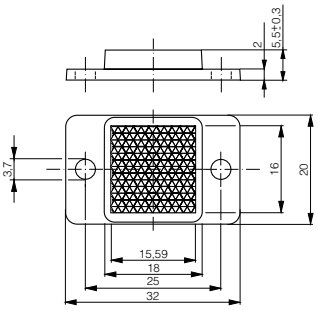

REFLECTOR 60 X 41 MM FOR UV

Part reference: **LXU-0001-064**

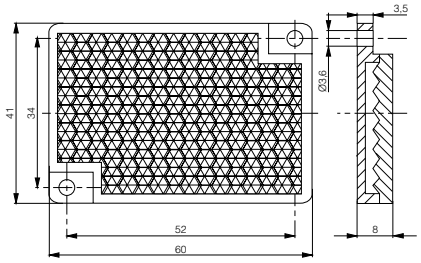

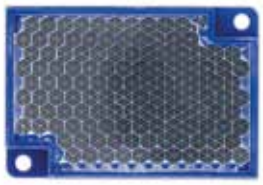

REFLECTIVE FOIL 100 X 100 MM

Part reference: **LXR-0002-100**

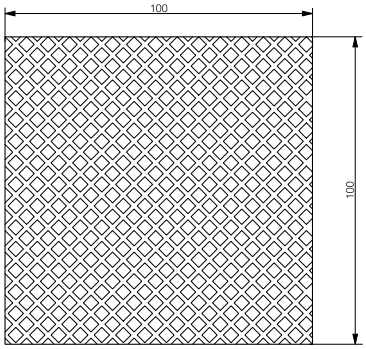

REFLECTIVE ROLL 25 MM X 22.8 M

Part reference: **LXR-0003-025**

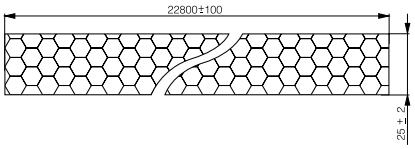

REFLECTIVE ROLL 50 MM X 22.8 M

Part reference: **LXR-0003-050**